SONY®

VIDEOCASSETTE PLAYER

BVW-10P

BETACAM

OPERATION AND MAINTENANCE MANUAL

2nd Edition

Serial No. 10201 to 10300

ご注意

このマニュアルに記載されている事柄の著作権は当社にあり，説明内容は機器購入者の使用を目的としています。
従って，当社の許可なしに無断で複写したり，説明内容(操作，保守等)と異なる目的で本マニュアルを使用することを禁止します。

CONFIDENTIAL

The material contained in this manual consists of information that is the property of Sony Corporation and is intended solely for use by the purchasers of the equipment described in this manual.
Sony Corporation expressly prohibits the duplication of any portion of this manual or the use thereof for any purpose other than the operation or maintenance of the equipment described in this manual without the express written permission of Sony Corporation.

CONFIDENTIEL

Le matériel contenu dans ce manuel consiste en informations qui sont la propriété de Sony Corporation et sont destinées exclusivement à l'usage des acquéreurs de l'équipement décrit dans ce manuel.
Sony Corporation interdit formellement la copie de quelque partie que ce soit de ce manuel ou son emploi pour tout autre but que des opérations ou entretiens de l'équipement à moins d'une permission écrite de Sony Corporation.

VERTRAULICH

Das in dieser Anleitung enthaltene Material besteht aus Informationen, die Eigentum der Sony Corporation sind, und ausschließlich zum Gebrauch durch den Käufer der in dieser Anleitung beschriebenen Ausrüstung bestimmt sind.
Die Sony Corporation untersagt ausdrücklich die Vervielfältigung jeglicher Teile dieser Anleitung oder den Gebrauch derselben für irgendeinen anderen Zweck als die Bedienung oder Wartung der in dieser Anleitung beschriebenen Ausrüstung ohne ausdrückliche schriftliche Erlaubnis der Sony Corporation.

TABLE OF CONTENTS
INHALTSVERZEICHNIS

1. OPERATION

1-1. Features . . . . . 1-1 (E)
1-2. Location and Function of Controls . . . . . 1-2 (E)
1-2-1. Control Panel . . . . . 1-2 (E)
1-2-2. Connector Panel . . . . . 1-4 (E)
1-2-3. Sub Control Panel . . . . . 1-6 (E)
1-3. Connections . . . . . 1-8 (E)
1-3-1. Playback . . . . . 1-8 (E)
1-3-2. Editing with Two VTRs . . . . . 1-9 (E)
1-3-3. Editing with a Control Unit . . . . . 1-11(E)
1-4. Cassette Insertion and Removal . . . . . 1-13(E)
1-5. Playback . . . . . 1-14(E)
1-5-1. Preparation . . . . . 1-14(E)
1-5-2. Operation . . . . . 1-14(E)
1-5-3. Adjustments . . . . . 1-15(E)
1-5-4. Tape Protection Devices . . . . . 1-15(E)
1-6. Check Routines . . . . . 1-16(E)
1-7. Head Cleaning . . . . . 1-19(E)
1-8. Specifications . . . . . 1-19(E)
1-9. Repacking for Shipment . . . . . 1-22(E)

1. BETRIEB

1-1. Besondere Merkmale . . . . . 1-1 (G)
1-2. Lage und Funktion der Bedienungselemente 1-2 (G)
1-2-1. Bedienungsfeld . . . . . 1-2 (G)
1-2-2. Anschlußfeld . . . . . 1-4 (G)
1-2-3. Hilfsbedienungsfeld . . . . . 1-6 (G)
1-3. Anschlüsse . . . . . 1-8 (G)
1-3-1. Wiedergabe . . . . . 1-8 (G)
1-3-2. Schneiden mit zwei Videorecordern . . 1-9 (G)
1-3-3. Schneiden mit einer Steuereinheit . . . 1-11(G)
1-4. Einlegen und Herausnehmen der Cassette . 1-13(G)
1-5. Wiedergabe . . . . . 1-14(G)
1-5-1. Vorbereitung . . . . . 1-14(G)
1-5-2. Betrieb . . . . . 1-14(G)
1-5-3. Einstellungen . . . . . 1-15(G)
1-5-4. Bandschutzeinrichtungen . . . . . 1-15(G)
1-6. Überprüfungen . . . . . 1-16(G)
1-7. Reinigung der Köpfe . . . . . 1-19(G)
1-8. Technische Daten . . . . . 1-19(G)
1-9. Wiederverpackung zum Transport . . . . . 1-22(G)

2. INSTALLATION

2-1. Operational Environment 2-1
2-2. Installation Space 2-1
2-3. Operating Voltage 2-2
2-4. Connectors for Optional Connection 2-2
2-5. Input/Output Signal of the Connector . . . 2-2
2-6. Select Switch Setting 2-4
2-7. Rack Mounting 2-5
2-8. Supplied Accessory 2-6
2-9. Optional Accessory 2-6

3. TECHNICAL INFORMATION

3-1. Specifications 3-1
3-2. Location of the Printed Circuit Board . . . 3-3
3-3. Location of the Mechanical Main Parts/Components 3-6
3-4. Printed Circuit Boards 3-7

4. PERIODIC CHECK AND MAINTENANCE

4-1. System Control Operation Check 4-1
4-2. Maintenance Time Table 4-3
4-3. Hours Meter 4-4
4-4. Cleaning Procedure 4-4
4-4-1. Video Head 4-4
4-4-2. Stationary Heads 4-4
4-4-3. Tape Movement Areas 4-4
4-5. Maintenance after Repairs 4-4

5. SERVICE INFORMATION

5-1. Removal of Cabinet 5-1
5-2. Removal of Cassette-up Compartment . . . 5-2
5-3. Note for Check and Maintenance of Printed Circuit Board 5-2
5-4. Module Extender 5-2
5-5. Spare Parts 5-2
5-6. To Operate the Machine without Installing Cassette Tape 5-2
5-7. Maintenance of KY or DE Board 5-3
5-8. Cassette Removal Procedure when the Tape is Slacken in the Machine . . . 5-3

17. SEMICONDUCTOR ELECTRODES

Semiconductor Electrodes 17-1

18. PRINTED WIRING BOARD AND SCHEMATIC DIAGRAM

VIDEO
PB-8 18-2
YD-15 18-5
CD-25 18-11
CF-12 18-17
CK-14 18-22
MY-17 18-40
PR-48 18-58
EN-20 18-76
AUDIO
AU-37 18-94

SERVO
SV-51 18-101
SYSTEM CONTROL
SY-91 18-128
TIME CODE
TC-25 18-146
POWER SUPPLY/DRIVER
PS-16 18-151
CONTROL/CONNECTOR PANEL
CP-52, SW-85, VR-8, HP-7, LA-4 18-155
CP-56, SW-86 18-159
ST-22 18-163
KY-32, DP-30 18-167
PC-9, PC-14 18-171
RE-6 18-173
FRAME
DE-12, DE-11, SS-8 18-175
HE-5, PH-16, LE-19, SS-8 18-179
CL-7, PC-17, PC-18 18-181
LM-4 18-183
PD-20 18-184
TE-2 18-185
TR-14 18-186
AC-40 18-187
MB-41 18-189
MB-42 18-197
FRAME 18-203

19. SPARE PARTS AND FIXTURE

19-1. Parts Information 19-1
19-2. Exploded View 19-1
Take-up Side Reel Chassis 19-5
Supply Side Reel Chassis 19-7
Head Drum, Stationary Heads and Tape Guides Block 19-9
Threading Ring Block 19-11
Pinch Press Mechanism Block 19-13
Supply Tension Regulator Block 19-14
Gear Box Block 19-16
Level Control Chassis Block 19-17
Function Control Chassis Block 19-19
Connector Panel Block 19-21
TBC Control Block 19-23
Chassis Block (1) 19-24
Switching Regulator, Switching Regulator (UR-06), Switching Regulator (UR-07) 19-26
Cassette-up Compartment 19-29
Ornamental Panel Block (1) 19-31
Ornamental Panel Block (2) 19-33
Printed Circuit Board Block (1) 19-35
Printed Circuit Board Block (2) 19-37
Extension Board Block 19-39
19-3. Electrical Parts List 19-41
19-4. Packing Material and Accessory (Supplied) 19-74

SECTION 1
OPERATION

The BVW-10P is a videocassette player for editing, and playing back a 1/2-inch Beta format video cassette tape recorded on the newly developed Betacam series VTR for the ENG (Electronic News Gathering) system.
Electronic editing can be done using the U-matic VTR BVU-800P, BVU-820P or the 1-inch VTR BVH-2000PS with or without the BVE-series editing control unit.

1-1. FEATURES

High quality picture
Even though only a 1/2-inch video cassette in the Beta format is used, the playback picture recorded on the newly developed Betacam series VTR is close to that recorded on the 1-inch VTR.

Front access
Every operation, including cassette insertion and removal, can be performed from the front panel, which can be tilted up to 90° (6 steps) to suit your preference.

Direct drive system with DC motors
Quick access to editing points is possible since independent DC motors drive the drum assembly, capstan assembly, supply and take-up reels and the tension on the tape is precisely set by a servo system.

Quick access to the editing points
Search functions providing a recognizable picture in the shuttle mode (in which the playback speed can be varied in 16 steps from $^{1}/_{30}$ to 10 times normal speed in both forward and reverse) and the jog mode (in which the picture changes as the search dial moves), enable operators to locate the editing point more quickly.
Picture in color can be monitored at the speed from −5 to +5 times normal speed.

Built-in time code reader
Time code reading and playback are possible using the built-in time code reader.

Connection with the video recorder
This player can be directly connected to a recorder such as a BVU-800P, BVU-820P, BVH-2000PS, and can be remotely controlled with the recorder.
Editing using a Sony BVE-series editing control unit is also possible.

Digital time counter
The time counter indicates the time code or the amount of tape advancement by counting the CTL signals, and facilitates locating editing points precisely.

Editing/duplicating connectors
The DUB OUT connector for U-matic H VTR allows editing and duplicating of video signals with little degradation.
Furthermore, a component signal of the luminance and chrominance can be obtained from the DUB/COMP OUT connector.

Built-in time base corrector (TBC)
Built-in TBC makes possible a stable playback picture.

Audio noise reduction system
The BVW-10P employs the newly-developed C-type Dolby NR* system for audio tape noise reduction. You can turn on and off this audio noise reduction system according to the tape to be used.

Auto rewind/auto stop
At the end of the tape, the tape rewinds automatically to the beginning. (Auto rewind)
At the top of the tape, the tape stops automatically. (Auto stop)

Plug-in type boards
Plug-in boards are designed for ease of service and maintenance. They are reached by simply removing the top panel.

Mountable in standard 19" rack
The BVW-10P can be mounted in a standard 19" rack. For rack mounting, refer to the Section 2.

* "Dolby" and the double-D symbol are trade marks of the Dolby Laboratories Licensing Corporation. Noise reduction system manufactured under license from Dolby Laboratories Licensing Corporation.

1-2. LOCATION AND FUNCTION OF CONTROLS

1-2-1. Control Panel

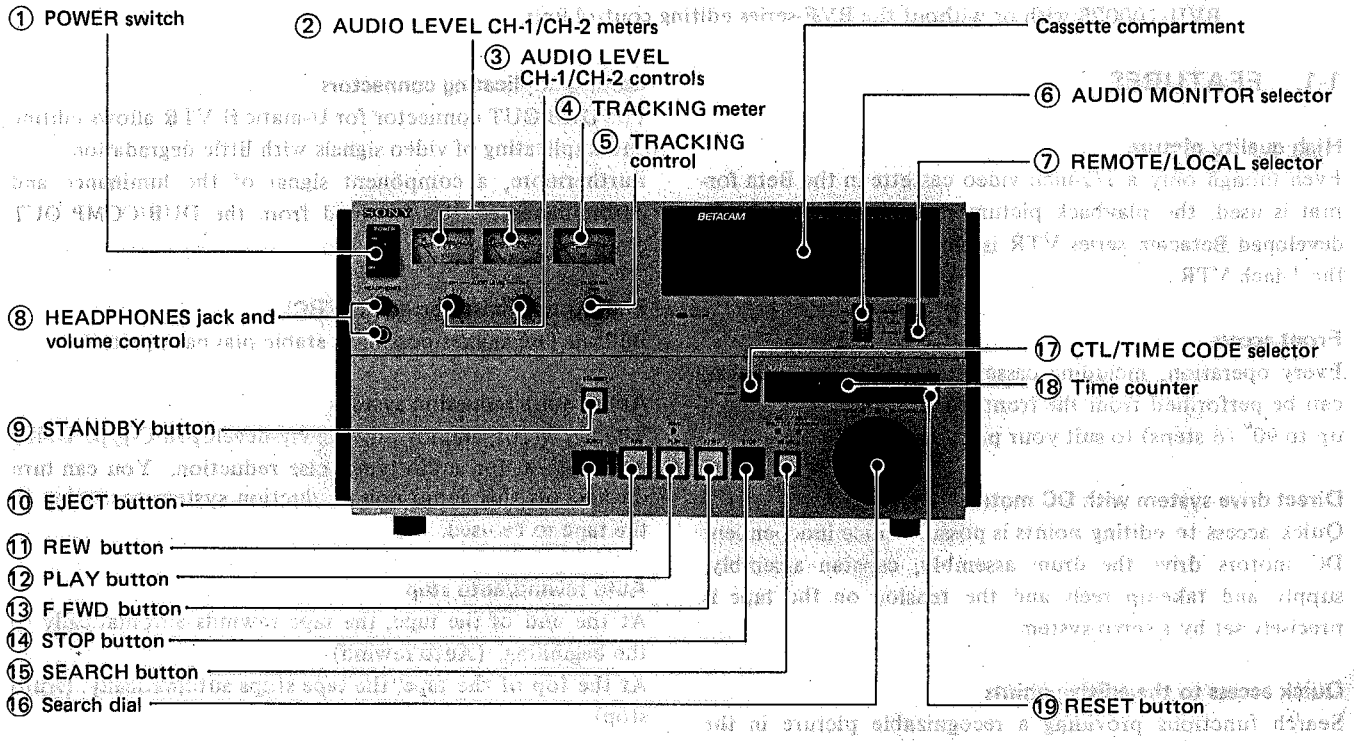

① POWER switch
Press the ON side to turn the power on. The lamp for the meters will light up.

② AUDIO LEVEL CH-1/CH-2 meters
Indicate the audio output level when the unit is in the playback mode.

③ AUDIO LEVEL CH-1/CH-2 controls
Adjust the audio output level of channel 1 and channel 2. To adjust the level, turn the controls so that the meter pointers swing up to "0" at the reference output level.

④ TRACKING meter
Indicates the FM signal level of the playback.

⑤ TRACKING control
Adjusts the tracking of the tape.
Normally, set to the center FIXED position.
When noise appears in the playback picture, turn the control to the left or right so that the TRACKING meter ④ pointer deflects to the maximum value. After the playback of that particular tape, return the control to the FIXED position.

⑥ AUDIO MONITOR selector
Selects the audio output signal from the HEADPHONES jack ⑧, the AUDIO MONITOR OUT connector (XLR) and the MONITOR connector (8 pin) on the rear panel.
CH-1: Audio channel 1 sound.
MIX: From the HEADPHONES jack, channel 1 sound from the left and channel 2 sound from the right.
From the AUDIO MONITOR OUT and the MONITOR connectors, mixed sound of both channels.
CH-2: Audio channel 2 sound.

⑦ REMOTE/LOCAL selector
REMOTE 1 (9P): Set to this position when the unit is to be remotely controlled by the equipment connected to the 9-pin REMOTE 1 connector on the rear panel.
The function buttons on the BVW-10P (except the STOP and EJECT buttons) will be inoperative.
LOCAL: Set to this position when the unit is to be operated with its own function buttons.
REMOTE 2 (36P): Set to this position when the unit is to be remotely controlled by the equipment connected to the 36-pin REMOTE 2 connector on the rear panel.
The function buttons on the BVW-10P (except the STOP and EJECT buttons) will be inoperative.

⑧ HEADPHONES jack (stereo phone type) and volume control

Connect 8-ohm stereo headphones here. The audio during playback can be monitored. The volume control adjusts the headphone volume.

⑨ STANDBY button

Whenever the head drum is rotating, the STANDBY button lights up, indicating that the unit is in the standby-on mode. If the STANDBY button is pressed in the stop mode, the head drum will stop and the unit will be in the standby-off mode. To resume the standby-on mode, press the STANDBY button again.

⑩ EJECT button

When this button is pressed, the cassette is ejected.

- Be sure to eject the cassette after every use before the power is turned off.

⑪ REW (rewind) button

Press to rewind the tape.

⑫ PLAY button

Press to play back the tape.

⑬ F FWD (fast forward) button

Press to advance the tape rapidly.

- In the following cases, the fast forward speed may be slowed down at about the center portion of the tape but this is not a problem.
  - The first fast forward after the cassette being inserted
  - The first fast forward after turning the power on

⑭ STOP button

Press to stop the tape.

In the stop mode, a still picture can be obtained because the head drum rotates and the tape is threaded.

The unit goes into the stop mode just after the cassette is inserted.

⑮ SEARCH button

Press to set the unit in the search mode; then the shuttle or jog function can be used. The lamp will light during the search mode.

⑯ Search dial

To locate the desired editing points quickly, use this dial. Pressing the dial in sets the unit in the jog mode and pressing it again and releasing it sets the unit in the shuttle mode. The appropriate lamp lights.

SHUTTLE: Turn the dial to the right or left. The tape speed can be varied from $^1/_{30}$ to approximately 10 times normal in either direction.

In the center (□) position, a still picture can be obtained.

JOG: Rotate the dial to the right or left. The tape moves in the direction and at the speed of rotation, from still to 1 time normal speed. When you stop rotating the dial, a still picture will be obtained.

- Be sure to set the dial to the □ position once before use when the power is turned on.

⑰ CTL/TIME CODE selector

Selects the indication on the time counter: CTL or time code.

When the REMOTE/LOCAL selector is set to REMOTE 1, the mode selected by the connected equipment will be indicated regardless of the setting of this selector.

⑱ Time counter

Indicates in hours, minutes, seconds and frames the tape position by reading the time code on the tape when the CTL/TIME CODE selector ⑰ is set to TIME CODE. When the selector is set to CTL, the time counter indicates how much the tape has advanced by counting the CTL signals.

⑲ RESET button

Press to set the counter number to "0:00:00:00" when the time counter is in the CTL mode. This button will not operate when the time counter indicates the time code.

Control panel positioning

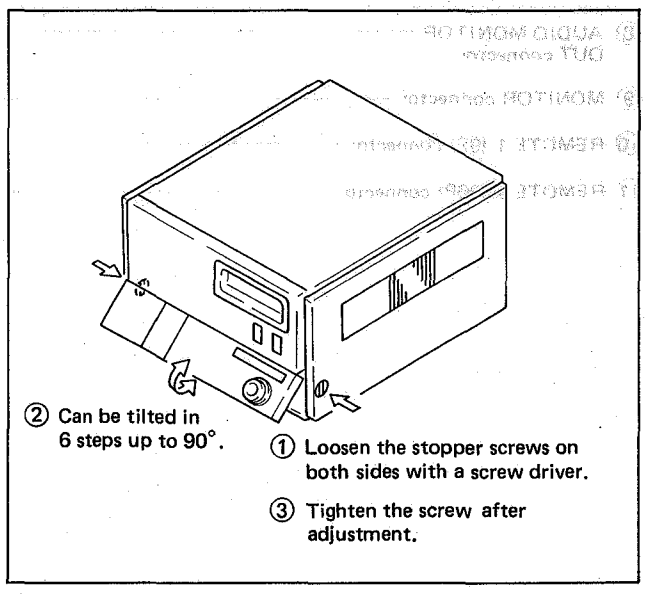

1-2-2. Connector Panel

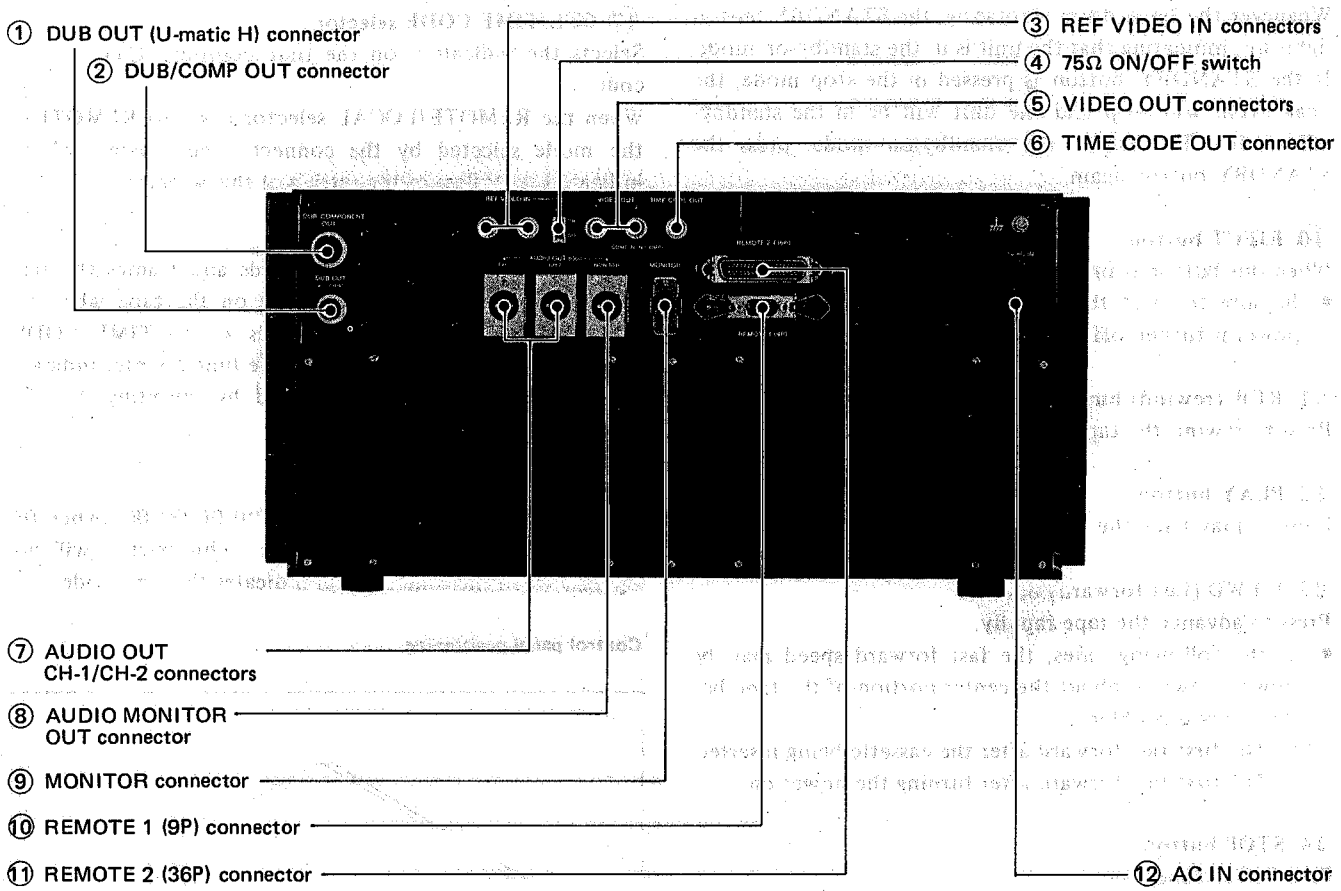

① DUB OUT (U-matic H) connector (7-pin, female)
The dubbing video signal is supplied.
Connect to the DUB IN connector of the U-matic H VTR using a dubbing cable (optional).

② DUB/COMP OUT connector (12-pin, female)
The component signal of the luminance (Y) and the chrominance (R-Y, B-Y) is supplied.

③ REF VIDEO IN (reference video input) connectors (BNC type)
Connect the reference video signal to either connector.
The other can be used as a looping output connector (bridge connector) to other video equipment. When only one of these connectors is to be used, set the 75Ω ON/OFF switch ④ to ON.

④ 75Ω ON/OFF switch
This is the video input 75 ohm termination switch.
ON: Normal position.
OFF: When one of the REF VIDEO IN connectors is being used as a looping output connector.

⑤ VIDEO OUT connectors (BNC type)
The composite video signal is supplied.
Connect to a video monitor or another VTR.
Video signal output from the VIDEO OUT 2 connector can be switched to the non-composite signal by using a switch on the printed circuit board. For details, see the Section 2.

⑥ TIME CODE OUT connector (BNC type)
The time code is supplied.
Connect to the TIME CODE IN connector of the time code reader or the VTR.

⑦ AUDIO OUT CH-1/CH-2 connectors (XLR, male)
Audio signals adjusted by the AUDIO LEVEL controls on the control panel are supplied.

⑧ AUDIO MONITOR OUT connector (XLR, male)
Connect audio equipment for monitoring. The output signal is selected by the AUDIO MONITOR selector on the control panel.

⑨ MONITOR connector (8-pin)
Video and audio signals are supplied.
Connect a color monitor with an optional monitor connecting cable. The audio output signal from this connector is selected by the AUDIO MONITOR selector on the control panel.

⑩ REMOTE 1 (9P) connector (9-pin, RS-422 spec.)
Connect equipment with a 9-pin remote control connector: either a VTR such as a BVU-800P, BVU-820P or BVH-2000PS using a supplied remote control cable, or an editing control unit such as a BVE-800, BVE-5000P.

⑪ REMOTE 2 (36P) connector (36-pin)
Connect a BVE series editing control unit such as a Sony BVE-500ACE, BVE-5000P, using an optional 36-pin remote control cable.
- The Sony BVR-510ACE remote control unit cannot be used.

⑫ AC IN connector
Connect to a wall outlet with the ac power cord supplied.

1-2-3. Sub Control Panel

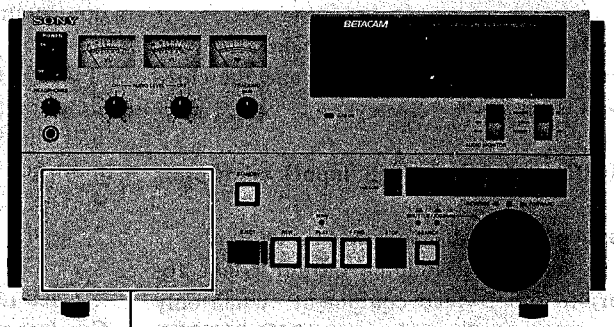

Inside the control panel

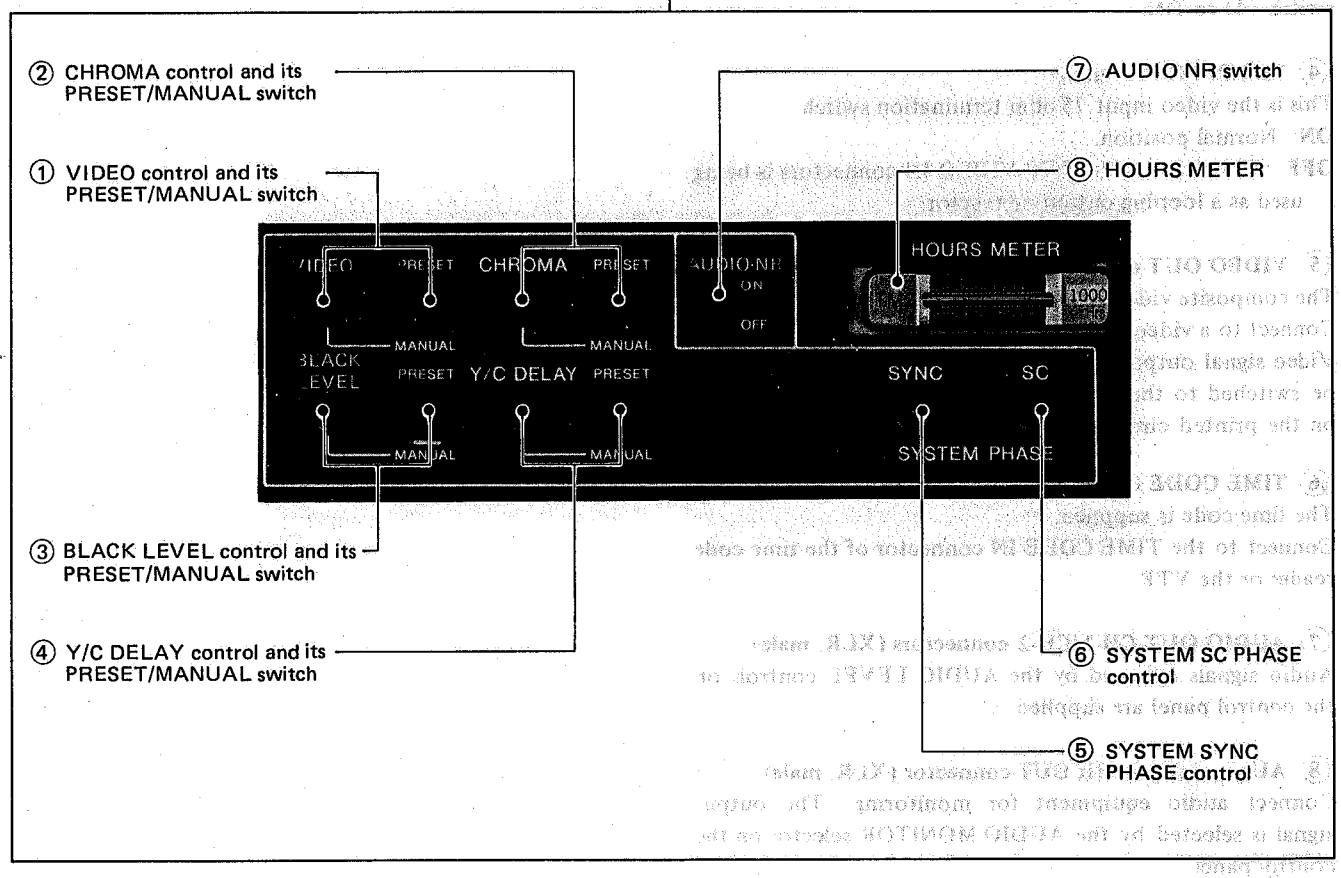

① VIDEO control and its PRESET/MANUAL switch

When the PRESET/MANUAL switch is set to:

MANUAL: The composite video signal output level can be adjusted within a range of ±3 dB by using the VIDEO control. As for the chroma level adjustment range, the total adjustment range cannot exceed +3 dB when used with the CHROMA control.

PRESET: The output video level is set at the preset level regardless of the position of the control.

② CHROMA control and its PRESET/MANUAL switch

When the PRESET/MANUAL switch is set to:

MANUAL: The output chroma level can be adjusted within a range of ±3 dB by using the CHROMA control. The total adjustment range cannot exceed +3 dB, however, when used with the VIDEO control.

PRESET: The output chroma level is set at the preset level regardless of the position of the control.

③ BLACK LEVEL control and its PRESET/MANUAL switch

When the PRESET/MANUAL switch is set to:

MANUAL: The output black level can be adjusted within a range of 0 to +15 IRE by using the BLACK LEVEL control.

PRESET: The output black level is set at the preset level regardless of the position of the control.

④ Y/C DELAY control and its PRESET/MANUAL switch

When the PRESET/MANUAL switch is set to:

MANUAL: The Y/C delay difference can be adjusted within a range of ±50 nsec.

PRESET: The Y/C delay difference is set at the preset value regardless of the position of the control.

⑤ SYSTEM SYNC PHASE control

Adjusts the output sync phase with respect to the reference input to the BVW-10P within a range of −1 μsec to +3 μsec. Use this control, for instance, to bring the output phase in line with the broadcast's reference, or when two or more VTRs are being used with this unit to produce special effects such as fades and lap-dissolve.

⑥ SYSTEM SC PHASE control

Adjusts the output subcarrier phase with respect to the reference input to the BVW-10P within a range of 360° p-p. Use this control, for instance, to bring the output phase in line with the broadcast's reference, or when two or more VTRs are being used with this unit to produce special effects such as fades and lap-dissolve.

⑦ AUDIO NR (audio noise reduction) switch

This unit employs the C-type Dolby NR system for audio tape noise reduction.

ON: To play back the tape recorded with the Dolby NR process, set the switch to this position.

OFF: To play back the tape recorded without the Dolby NR process, set the switch to this position.

⑧ HOURS METER

This meter indicates the total elapsed time that the video head drum has rotated (max. 1000 hours).

1-3. CONNECTIONS

1-3-1. Playback

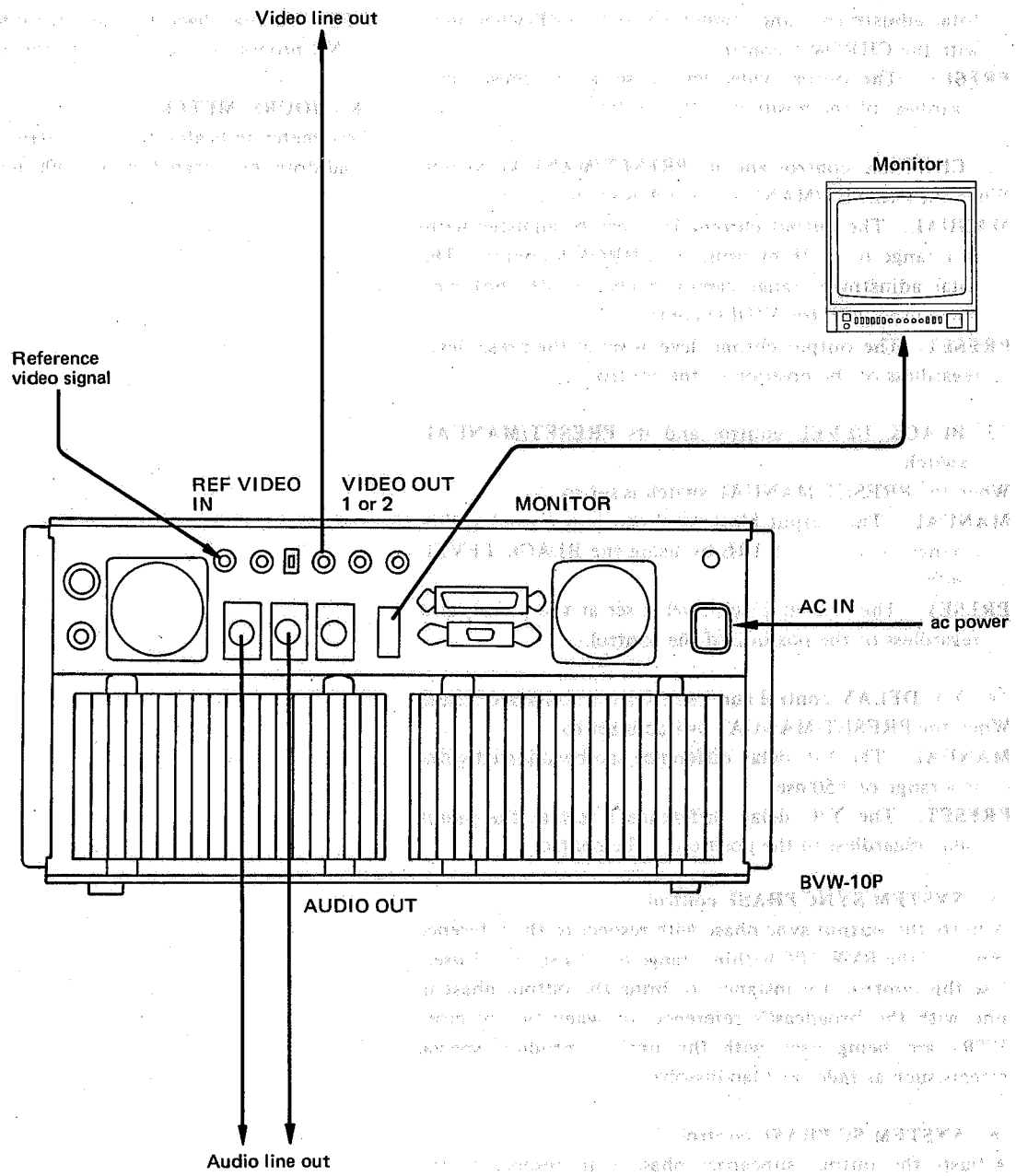

1-3-2. Editing with Two VTRs

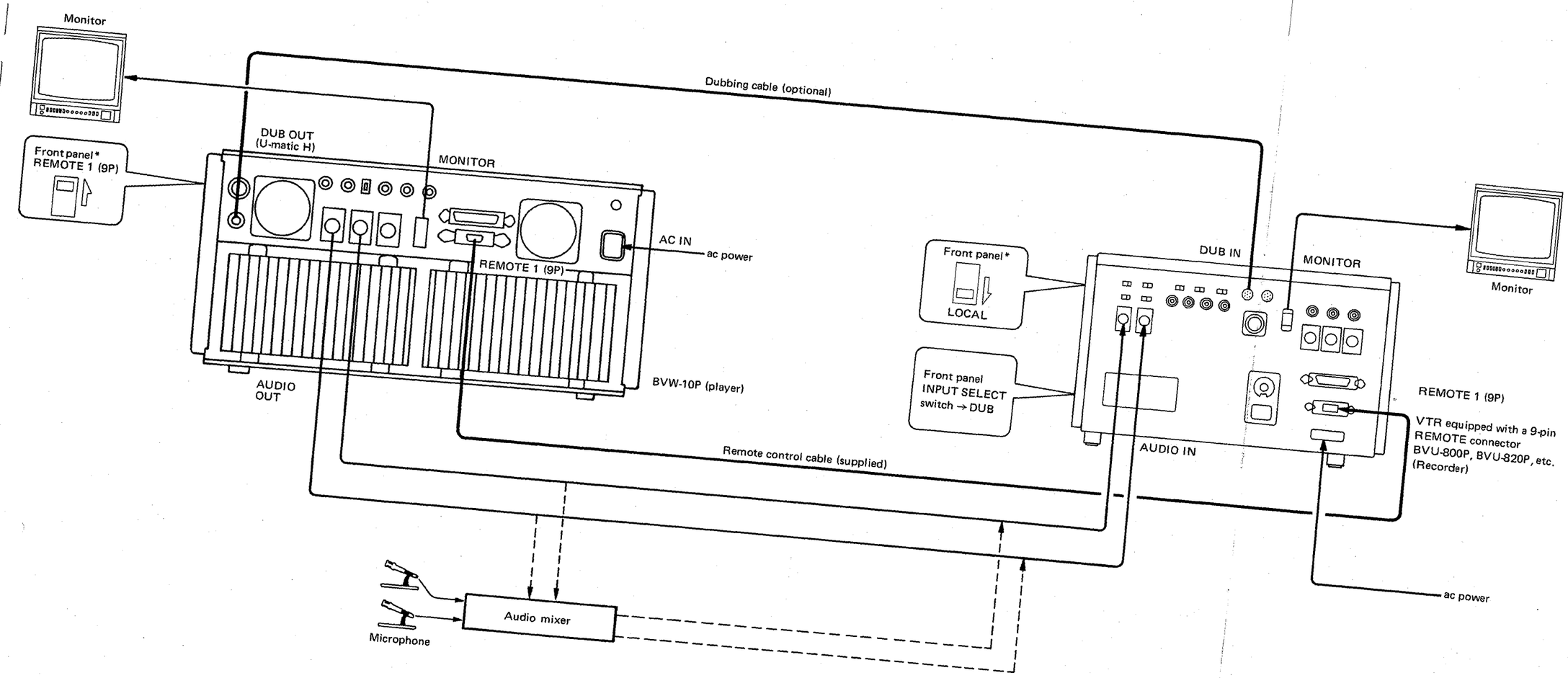

1-3-3. Editing with a Control Unit

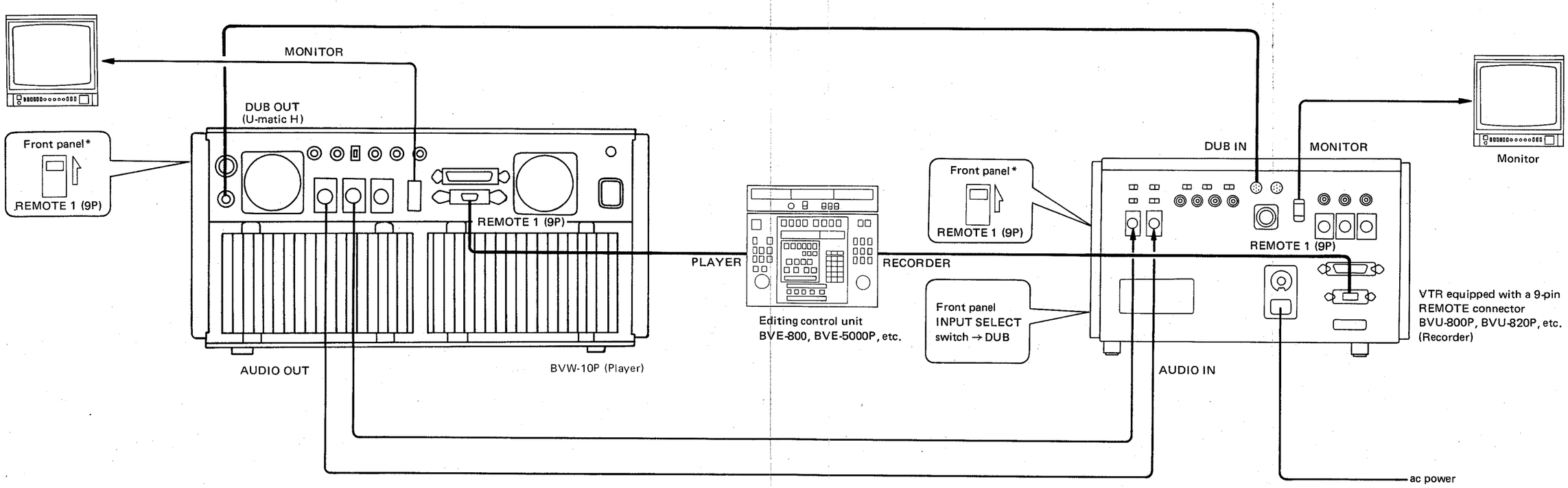

* Set to the REMOTE 2 (36P) position when the 36-pin connectors are used for connection with an editing control unit (BVE-500ACE, etc.) and a VTR (BVU-200P, etc.).

1-4. CASSETTE INSERTION AND REMOVAL

To insert a cassette

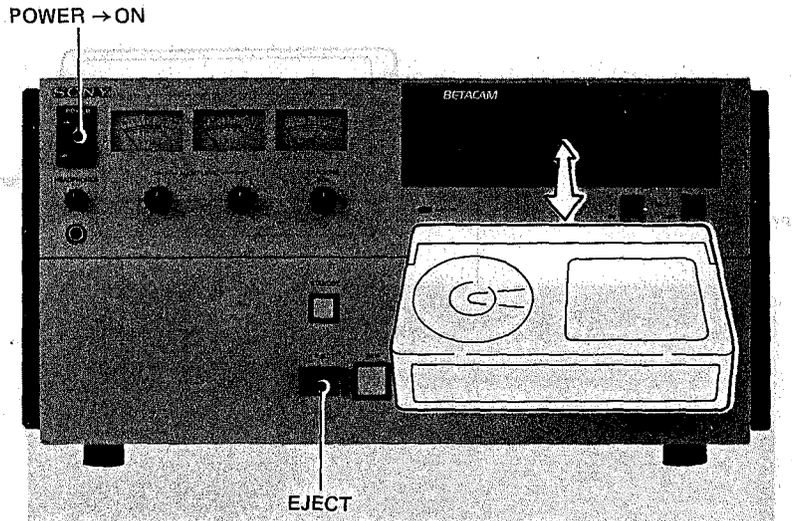

The tape will be automatically threaded, the drum will rotate and a still picture will be displayed.

To remove a cassette

Press the EJECT button while the POWER switch is set to ON.

Note: Remove the cassette after every use.

1-5. PLAYBACK

1-5-1. Preparation

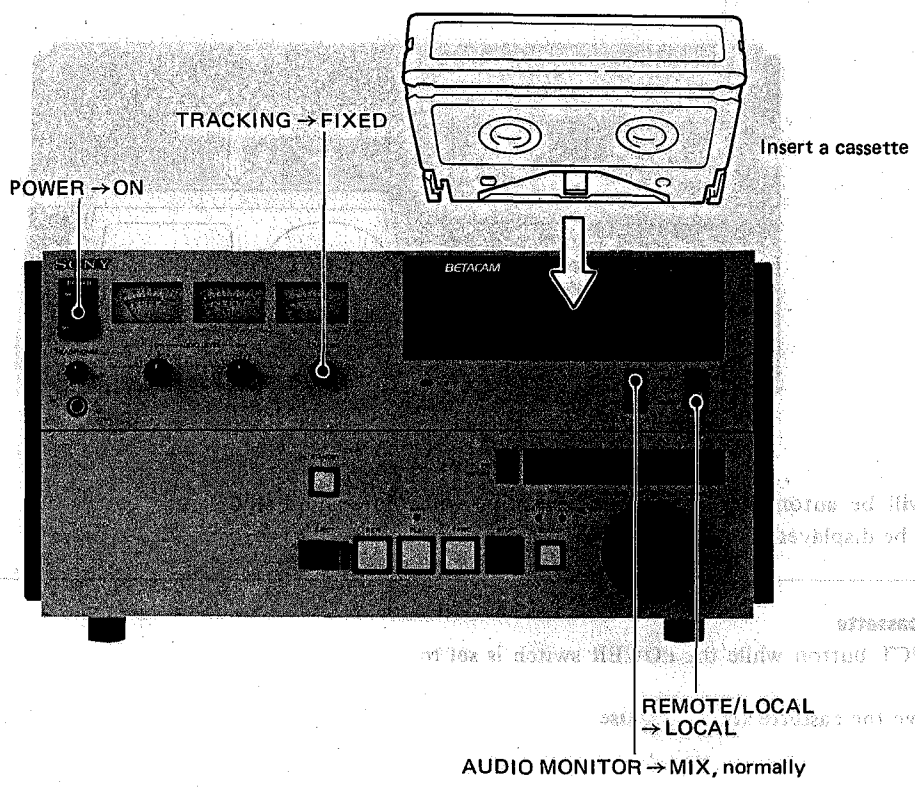

1-5-2. Operation

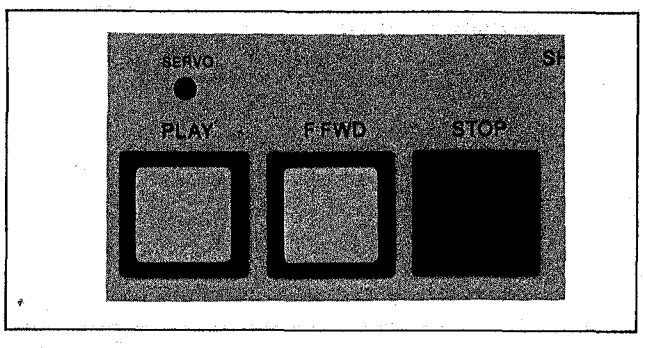

To start playback

Press the PLAY button.

The PLAY lamp will light up.

To stop playback

Press the STOP button.

The PLAY lamp will go off and the STOP lamp will light up.

- If the tape reaches the end, it will automatically rewind to the beginning and stop.

1-5-3. Adjustments

Tracking adjustment

Normally, set the TRACKING control at the FIXED position.

If noise appears on the playback picture, turn the TRACKING control to the left or right so that the pointer of the TRACKING meter deflects to the maximum value.

- When the playback of that particular tape is finished, return the control to the FIXED position.

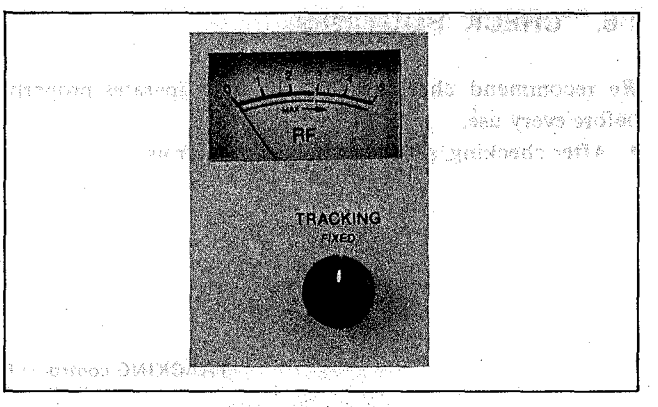

Audio level adjustment

Adjust the AUDIO LEVEL controls for channels 1 and 2 so that the AUDIO LEVEL meters read approximately zero at the reference output level.

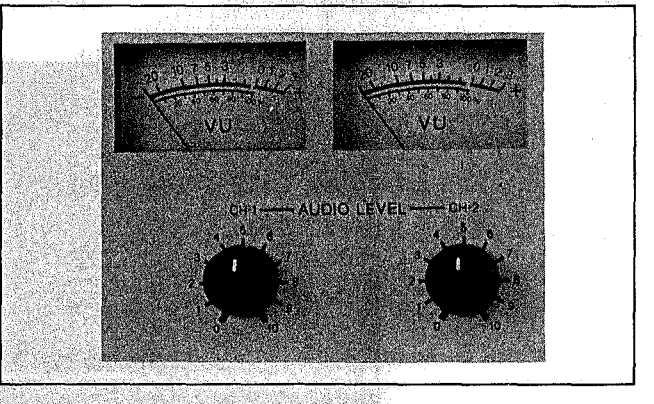

1-5-4. Tape Protection Devices

Tape protection

To protect the tape and the video heads, the unit will go into the tape protection mode if the tape is stopped for more than 8 minutes. There are two cases:

- If the unit stays in the stop mode for more than 8 minutes, the unit will go into the standby-off mode; the head drum will stop rotating, the tape will slacken and the STANDBY lamp will go off.
  To set the unit into the desired function mode, press the appropriate button.
  To obtain a still picture from the standby-off mode, press the STANDBY button.
- If a still picture is displayed more than 8 minutes in the search mode, the tape will then advance in the forward direction at $^{1}/_{30}$ normal speed.

Moisture condensation

If moisture condenses inside the player, the internal protection circuit will activate; the drum and the capstan motors will stop and the AUTO OFF lamp on the front panel will light. The cassette will be ejected if present. Then the drum will begin rotating again to quickly dry the drum assembly.

- Do not operate the unit for at least 10 minutes after you transport the unit directly from a cold location to a warm location as it takes a few minutes until moisture condenses on the head drum and causes the lamp to light. After 10 minutes, turn on the POWER button and check the following.
  a) If the lamp does not light: Operate the unit normally.
  b) If the lamp lights: Leave the unit with the power on and wait until the lamp goes off. While the lamp is lit, a cassette cannot be inserted.

1-6. CHECK ROUTINES

We recommend checking that the unit operates properly before every use.

- After checking, set the switches for later use.

Preparation

First, connect a video and audio monitor and prepare a video cassette tape on which video signals and audio CH-1 and CH-2 signals are recorded (do not use an alignment tape).

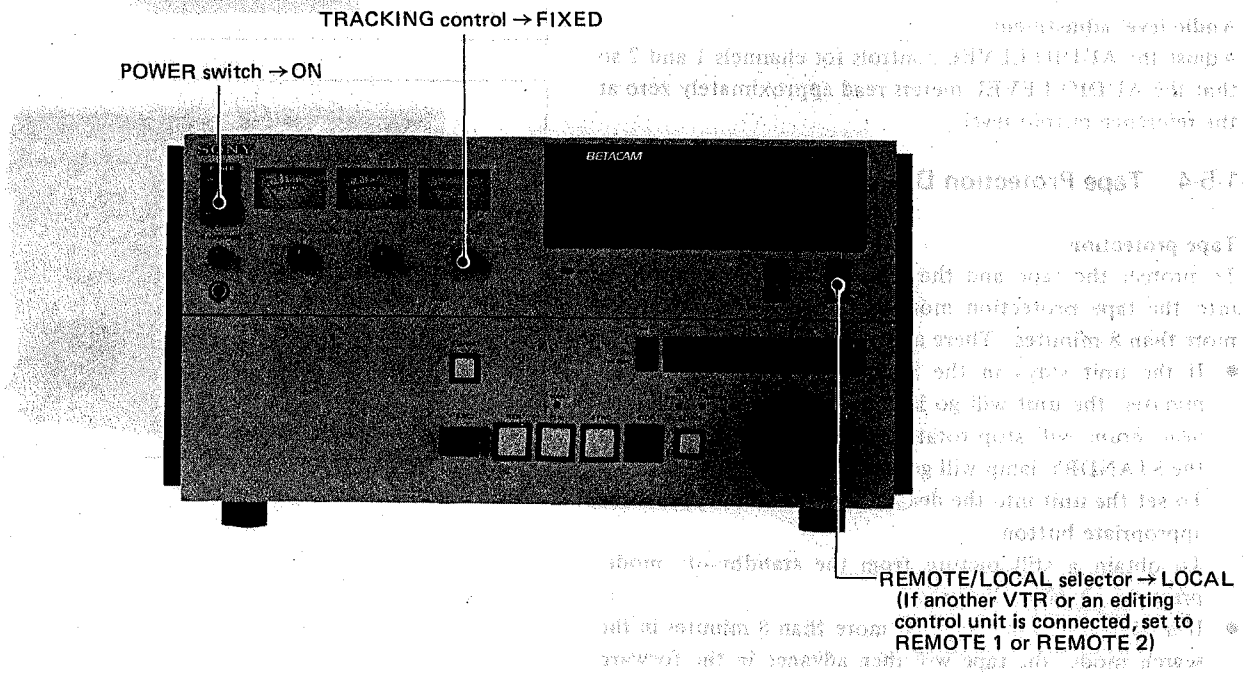

View of exterior

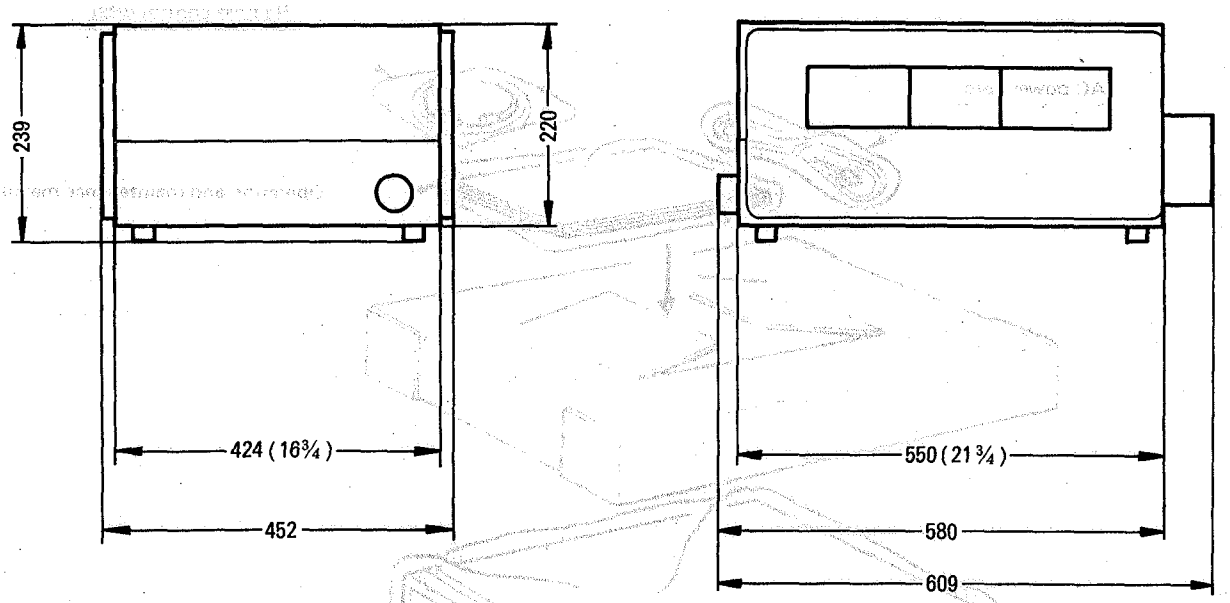

Dimensions of rack mounting (Side panels removed)

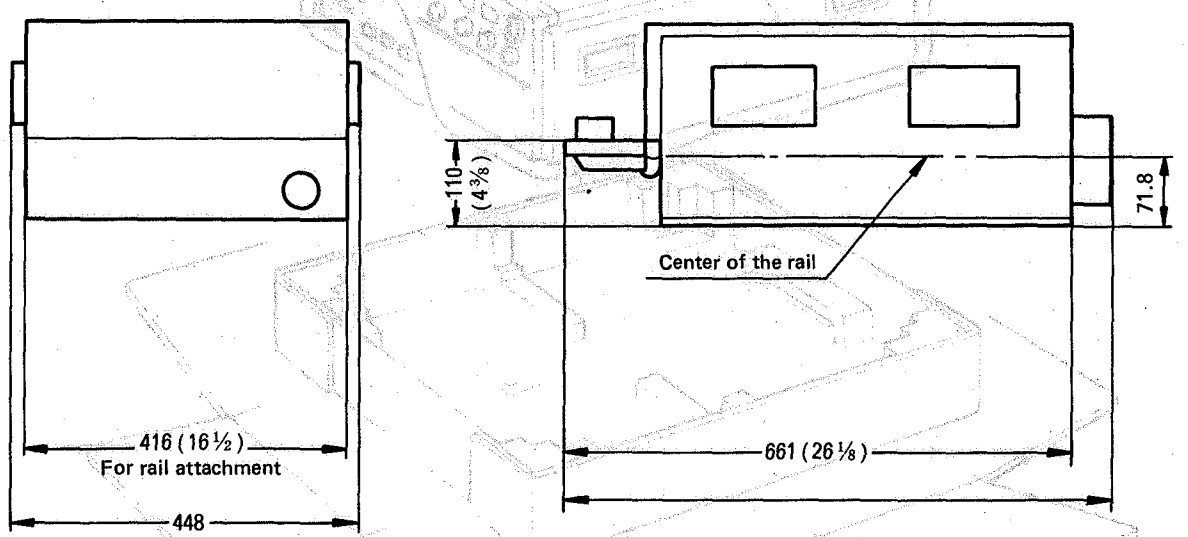

Unit: mm (inch)

1-9. REPACKING FOR SHIPMENT

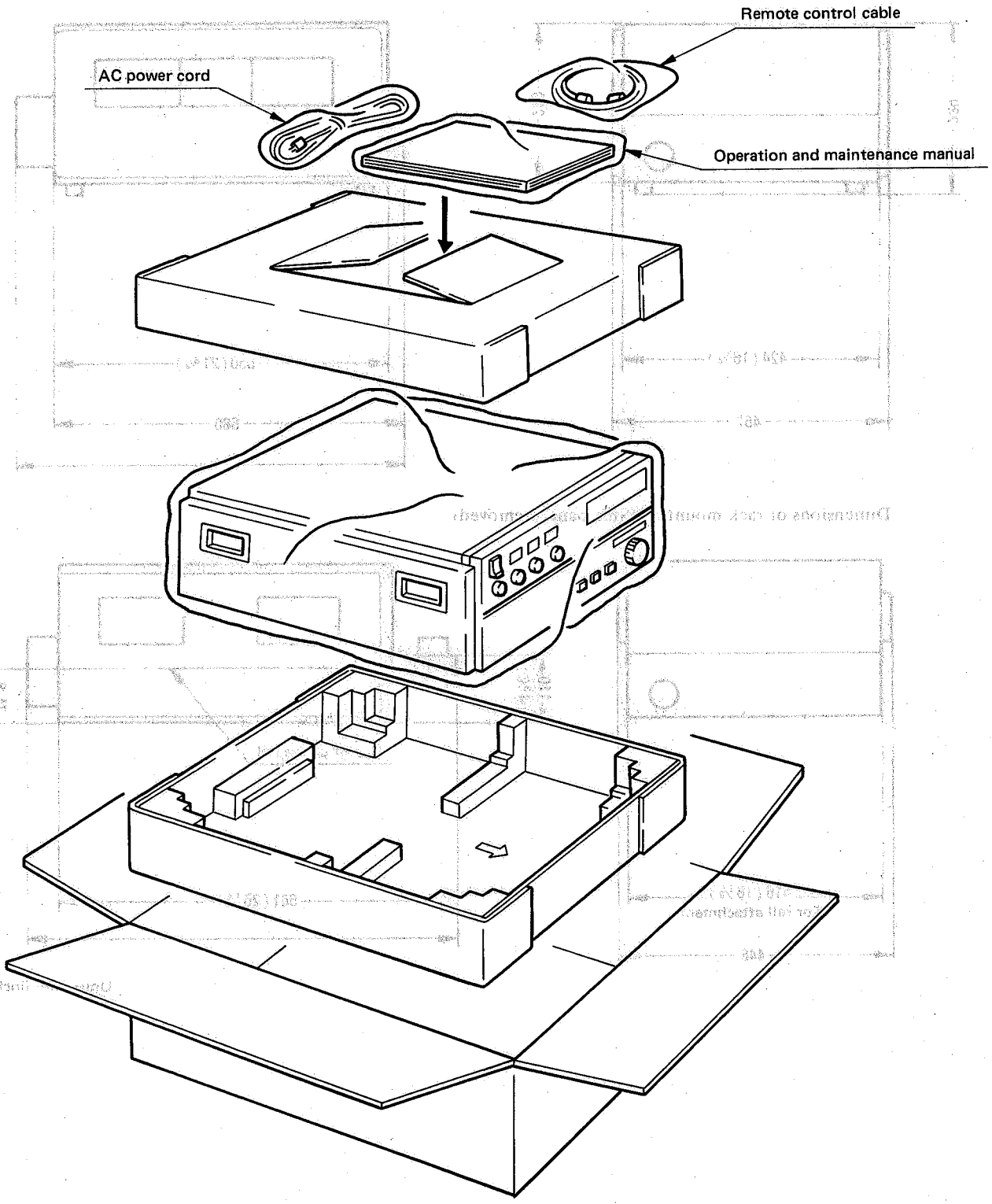

TEIL 1
BETRIEB

Der BVW-10P Videocassetten-Spieler dient zum Schneiden und zum Wiedergeben einer 1/2-Zoll Beta-Format Videocassette, die auf der neuentwickelten Betacam Videorecorder aus dem ENG (Electronic News Gathering)-System bespielt wurde.
Zum elektronischen Schneiden können der U-matic Videorecorder BVU-800P oder BVU-820P sowie der 1-Zoll Videorecorder BVH-2000PS verwendet werden. Wahlweise können diese Geräte auch über eine Schnittsteuereinheit der BVE-Serie betrieben werden.

1-1. BESONDERE MERKMALE

Hohe Bildqualität
Obwohl nur eine 1/2-Zoll Beta-Format Videocassette verwendet wird, erhält man bei der Wiedergabe eines Bandes, das auf dem neuentwickelten Videorecorder der Betacam-Serie bespielt wurde, eine hohe Bildqualität, die der eines 1-Zoll Videorecorders kaum nachsteht.

Bequeme Bedienung an der Vorderseite
Alle Bedienungsvorgänge einschließlich Einlegen und Herausnehmen der Cassette, können an der Vorderseite durchgeführt werden. Zur bequemeren Bedienung kann der untere Teil des Bedienungsfeldes in 6 Stufen bis um 90° verstellt werden.

Direktantriebssystem mit Gleichstrommotoren
Um schnellen Zugriff zu den Schnittpunkten zu ermöglichen sind unabhängige Gleichstrommotoren zum Antrieb von Kopftrommel, Capstan, Aufwickel- und Abwickelspulen vorgesehen, wobei ein Servosystem für eine präzise Einhaltung der Bandspannung sorgt.

Schneller Zugriff zu den Schnittpunkten
Eine Suchfunktion mit erkennbarem Bild im Schuttle-Betrieb (die Wiedergabegeschwindigkeit kann in 16 Schritten von $^1/_{30}$ bis 10fache Normalgeschwindigkeit in Vorwärts- und Rückwärtsrichtung variiert werden) und im Jog-Betrieb (das Bild ändert sich entsprechend der Bewegung des Suchlaufknopfes) ermöglichen ein schnelleres Auffinden der Schnittpunkte.
Im Bereich −5facher bis +5facher Normalgeschwindigkeit erhält man ein Farb-Monitorbild.

Eingebauter Zeitcodeleser
Durch den eingebauten Zeitcodeleser ist ein Lesen und ein Wiedergeben des Zeitcodes möglich.

Anschlußmöglichkeit für Videorecorder
Der BVW-10P kann direkt an Recorder wie z.B. BVU-800P, BVU-820P, BVH-2000PS angeschlossen und von dem Recorder aus fernbedient werden.
Zum Schneiden kann auch die Schnittsteuereinheit der Sony BVE-Serie verwendet werden.

Digitaler Zeitzähler
Der Zähler zeigt den Zeitcode oder die bereits durchgelaufene Bandmenge durch Zählen der CTL-Signale an und ermöglicht genaues Auffinden der Schnittpunkte.

Schnitt/Überspielanschlüsse
Der DUB OUT-Anschluß für einen U-matic Videorecorder ermöglicht ein hochqualitatives Schneiden und Überspielen des Videosignals.
Weiterhin können am DUB/COMP OUT-Anschluß die Luminanz- und Chroma-Signalkomponenten abgegriffen werden.

Eingebauter Time-Base-Corrector (TBC)
Ein eingebauter Time-Base-Corrector sorgt für ein stabiles Wiedergabebild.

Audio-Rauschverminderungssystem
Der BVW-10P besitzt das neuentwickelte Dolby-C*-System zur Audio-Rauschverminderung. Je nach verwendetem Band kann das Rauschverminderungssystem ein- oder ausgeschaltet werden.

Automatische Rückspul- und automatische Stop-Funktion
Am Bandende wird das Band automatisch zum Anfang zurückgespult. (Automatische Rückspul-Funktion)
Ist der Bandanfang erreicht, stoppt das Band automatisch. (Automatische Stop-Funktion)

Einsteckbare Leiterplatten
Das Gerät besitzt service- und wartungsfreundliche einsteckbare Leiterplatten, die nach Abnehmen der oberen Abdekkung bequem zugänglich sind.

Einbaumöglichkeit in 19-Zoll Normgestell
Der BVW-10P kann in ein 19-Zoll Normgestell eingebaut werden. Siehe dazu Teil 2.

* „Dolby" und das Doppel-D-Symbol sind eingetragene Warenzeichen der Dolby Laboratories. Das Rauschverminderungssystem wird unter Lizenz der Dolby Laboratories hergestellt.

1-2. LAGE UND FUNKTION DER BEDIENUNGSELEMENTE

1-2-1. Bedienungsfeld

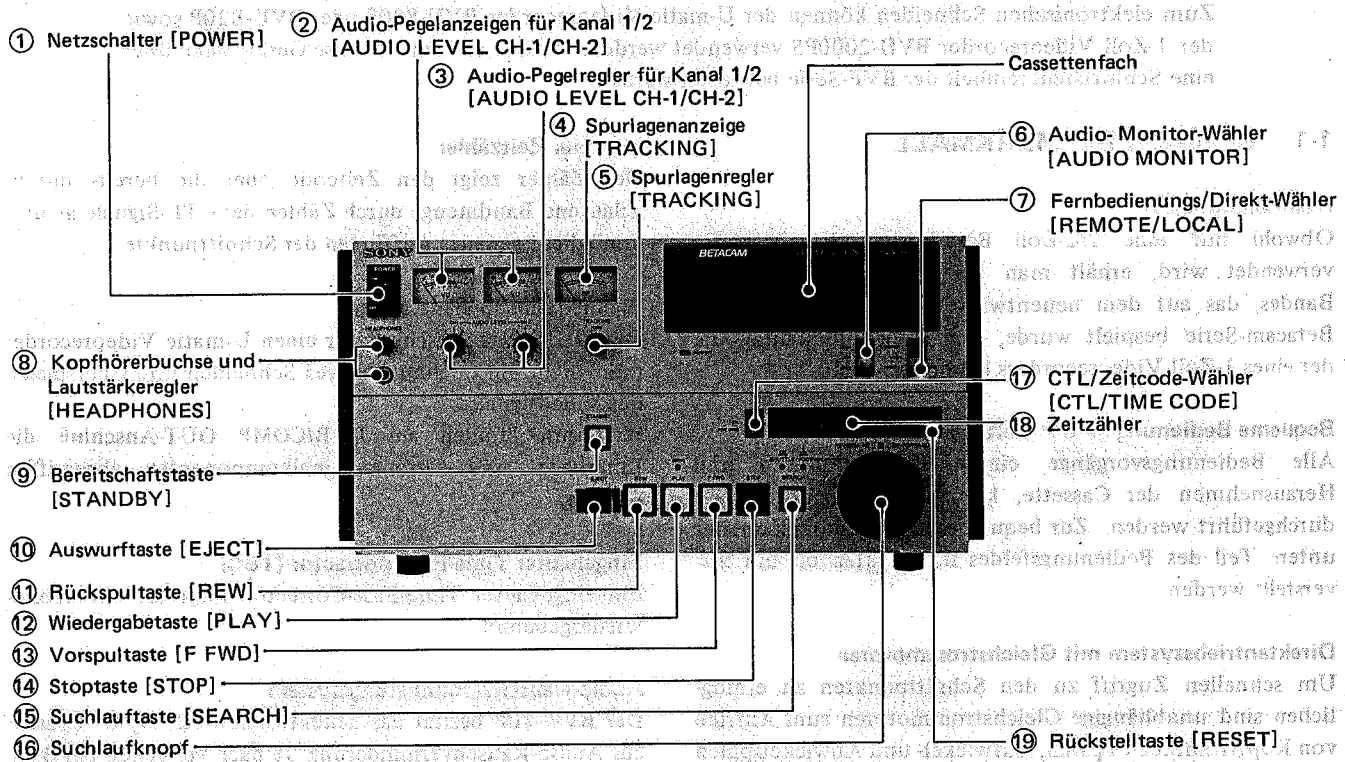

① Netzschalter [POWER]
Zum Einschalten auf die „ON" Seite des Schalters drücken.

② Audio-Pegelanzeigen für Kanal 1/2 [AUDIO LEVEL CH-1/CH-2]
Zur Anzeige des Audio-Ausgangspegels bei Wiedergabebetrieb.

③ Audio-Pegelregler für Kanal 1/2 [AUDIO LEVEL CH-1/CH-2]
Zur Einstellung des Audio-Ausgangspegels von Kanal 1 und 2. Stellen Sie den Pegel so ein, daß die Zeiger der Anzeigen beim Referenz-Ausgangspegel bis „0" ausschlagen.

④ Spurlagenanzeige [TRACKING]
Zeigt bei Wiedergabe den Signalpegel des FM-Signals an.

⑤ Spurlagenregler [TRACKING]
Zur Einstellung der Spurlage des Bandes.
Stellen Sie diesen Regler normalerweise in die Mittelstellung (FIXED).
Ist das Wiedergabebild jedoch gestört, so drehen Sie den Regler nach links oder nach rechts, bis die TRACKING-Anzeigen ④ maximalen Wert anzeigen. Vergessen Sie nicht, den Regler nach der Wiedergabe dieses speziellen Bandes wieder in die FIXED-Stellung zurückzustellen.

⑥ Audio- Monitor-Wähler [AUDIO MONITOR]
Zur Wahl des an der HEADPHONES-Buchse ⑧ am AUDIO MONITOR OUT-Anschluß (XLR) und am MONITOR-Anschluß (8-Pol) an der Rückseite anliegenden Audio-Ausgangssignals.
CH-1: Audio-Kanal 1.
MIX: An der HEADPHONES-Buchse erhält man Kanal 1 links und Kanal 2 rechts.
An den AUDIO MONITOR OUT- und MONITOR-Anschlüssen liegt ein Mischsignal aus beiden Kanälen an.
CH-2: Audio-Kanal 2.

⑦ Fernbedienungs/Direkt-Wähler [REMOTE/LOCAL]
REMOTE 1 (9P): Wählen Sie diese Stellung, wenn der BVW-10P von dem am 9-poligen REMOTE 1-Anschluß an der Rückseite angeschlossenen Gerät aus fernbedient werden soll.
Die Funktionstasten des BVW-10P arbeiten dann nicht mehr (außer STOP- und EJECT-Taste).
LOCAL: Zur direkten Bedienung an den Funktionstasten des BVW-10P.
REMOTE 2 (36P): Wählen Sie diese Stellung, wenn der BVW-10P von dem am 36-poligen REMOTE 2-Anschluß an der Rückseite angeschlossenen Gerät aus fernbedient werden soll.
Die Funktionstasten des BVW-10P arbeiten dann nicht mehr (außer STOP- und EJECT-Taste).

⑧ Kopfhörerbuchse und Lautstärkeregler [HEAD-PHONES] (Stereo-Klinkenbuchse)
Zur Überwachung des Wiedergabe-Tonsignals kann hier ein 8 Ohm Stereo-Kopfhörer angeschlossen werden. Die Kopfhörer-Lautstärke kann am Regler eingestellt werden.

⑨ Bereitschaftstaste [STANDBY]
Sobald sich die Kopftrommel dreht, leuchtet die STANDBY-Taste auf und zeigt damit an, daß sich das Gerät im Bereitschaftsbetrieb befindet. Wird die STANDBY-Taste in der Stop-Funktion gedrückt, so stoppt die Kopftrommel und der Bereitschaftsbetrieb wird abgeschaltet. Drücken Sie die STANDBY-Taste erneut, um wieder auf Bereitschaft zurückzuschalten.

⑩ Auswurftaste [EJECT]
Drücken Sie diese Taste zum Auswerfen der Cassette.
- Nehmen Sie die Cassette nach der Verwendung stets heraus, bevor Sie das Gerät abschalten.

⑪ Rückspultaste [REW]
Zum Zurückspulen des Bandes.

⑫ Wiedergabetaste [PLAY]
Zum Wiedergeben des Bandes.

⑬ Schnellvorspultaste [F FWD]
Zum schnellen Vorspulen des Bandes.
- In folgenden Fällen kann die Schnellvorspulgeschwindigkeit etwa in der Mitte des Bandes abnehmen. Dies ist jedoch kein Anzeichen für das Vorliegen einer Betriebsstörung.
  - Beim ersten Schnellvorspulen nach dem Einsetzen der Cassette
  - Beim ersten Schnellvorspulen nach dem Einschalten des Gerätes

⑭ Stoptaste [STOP]
Zum Stoppen des Bandes.
Da in der Stop-Funktion die Kopftrommel weiterhin rotiert und das Band eingefädelt bleibt, kann ein Standbild beobachtet werden.
Nach dem Einlegen einer Cassette schaltet das Gerät stets zunächst auf die Stop-Funktion.

⑮ Suchlauftaste [SEARCH]
Zum Umschalten auf Suchlauf. Die Lampe leuchtet dann auf, und der Suchlauf kann in der Shuttle- oder Jog-Funktion durchgeführt werden.

⑯ Suchlaufknopf
Zum schnellen Auffinden der gewünschten Schnittpunkte. Durch Drücken des Knopfes schaltet das Gerät in die Jog- und durch nochmalges Drücken rastet der Knopf aus und das Gerät schaltet in die Shuttle-Funktion. Der entsprechende Indikator leuchtet jeweils auf.

SHUTTLE: Durch Drehen des Knopfes nach rechts oder links kann die Bandgeschwindigkeit in beiden Richtungen von $^1/_{30}$ bis ca. 10facher Normalgeschwindigkeit verändert werden.
In der Mittelstellung (□) erhält man ein Standbild.

JOG: Durch Drehen des Knopfes nach rechts oder links ist ein Varrieren von Standbild bis 1-fache Normalgeschwindigkeit möglich, wobei die Bandlaufrichtung und die Bandgeschwindigkeit der Drehung des Knopfes entspricht. Wird der Knopf angehalten, so erhält man ein Standbild.
- Nach dem Einschalten des Geräts ist darauf zu achten, den Knopf erst einmal in die □ Position zu stellen, bevor mit dem Suchlauf begonnen wird.

⑰ CTL/Zeitcode-Wähler [CTL/TIME CODE]
Zur Wahl der Zeitzähleranzeige: CTL oder Zeitcode.
Steht der REMOTE/LOCAL-Wähler auf REMOTE 1, so wird die Zeitzähleranzeige von den angeschlossenen Geräten aus umgeschaltet und der CTL/TIME CODE-Wähler bleibt wirkungslos.

⑱ Zeitzähler
Steht der CTL/TIME CODE-Wähler ⑰ auf TIME CODE, so wird der Zeitcode des Bandes gelesen und die Bandposition in Stunden, Minuten, Sekunden und Vollbildern angezeigt. Steht der Wähler auf CTL, so werden die CTL-Signale gezählt und der Zähler zeigt die bereits durchgelaufene Bandmenge an.

⑲ Rückstelltaste [RESET]
Zum Rückstellen des Zählers auf „0:00:00:00", wenn sich der Zeitzähler im CTL-Betrieb befindet. Befindet sich der Zähler jedoch im Zeitcode-Betrieb, so arbeitet diese Taste nicht.

Verstellen des Bedienungspultes

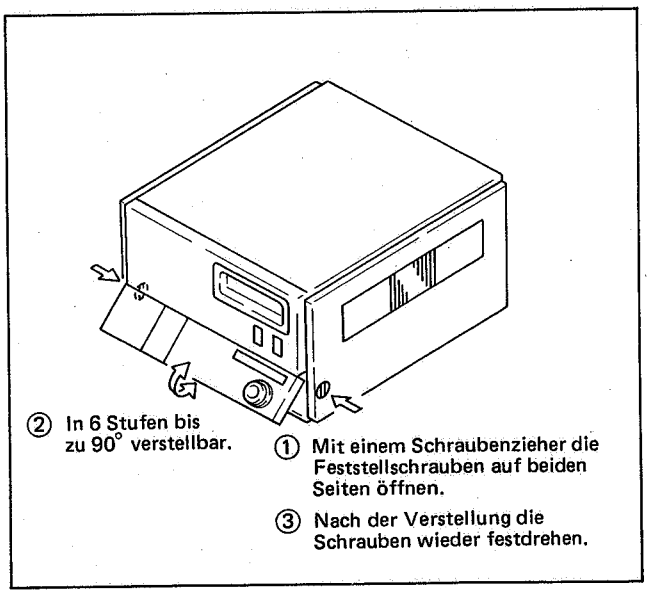

1-2-2. Anschlußfeld

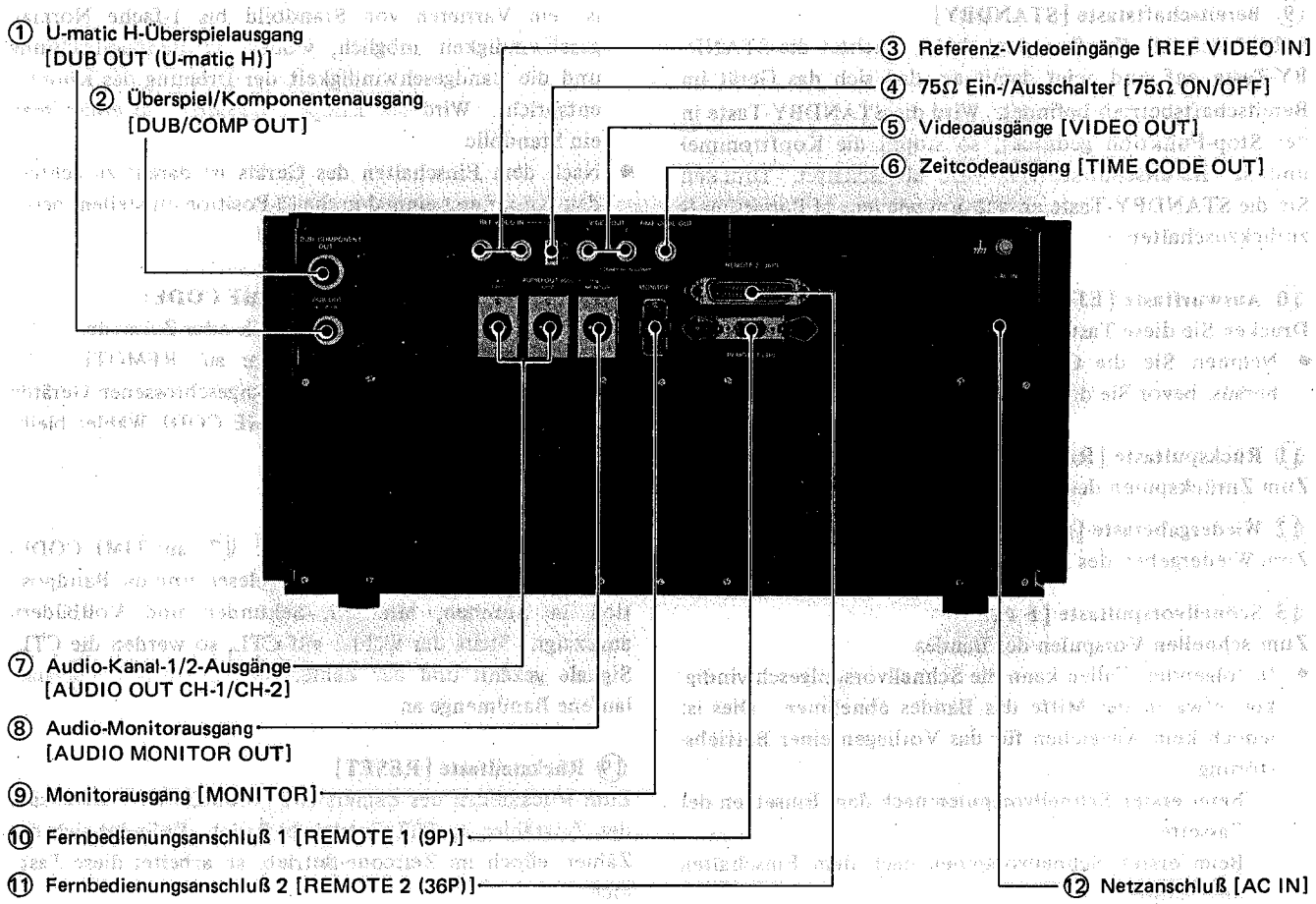

① U-matic H-Überspielausgang [DUB OUT (U-matic H)]
Hier liegt das Video-Überspielsignal an.
Verbinden Sie diesen Ausgang unter Verwendung eines Überspielkabels (Sonderzubehör) an den DUB IN-Anschluß eines U-matic H-Videorecorders.

② Überspiel/Komponentenausgang [DUB/COMP OUT] (12-polige Buchse)
Hier liegen die Luminanz (Y)- und die Chroma (R–Y, B–Y)-Signalkomponenten an.

③ Referenz-Videoeingänge [REF VIDEO IN] (BNC-Buchse)
Beide Buchsen dienen zum Anschluß eines Referenz-Videosignals.
Die nichtverwendete Buchse kann als durchgeschleifter Ausgang (Brückenanschluß) für andere Videogeräte verwendet werden. Wird nur eine dieser Buchsen verwendet, so stellen Sie den 75Ω ON/OFF-Schalter ④ auf ON.

④ 75Ω Ein-/Ausschalter [75Ω ON/OFF]
Zum Abschließen der Videoeingänge mit 75 Ohm.
ON: Normalstellung.
OFF: Wenn eine der REF VIDEO IN-Buchsen als durchgeschleifter Ausgang verwendet wird.

⑤ Videoausgänge [VIDEO OUT] (BNC-Buchse)
Hier liegt das FBAS-Signal an.
Schließen Sie einen Video-Monitor oder einen Videorecorder an.
Das an der VIDEO OUT 2-Buchse anliegende Videosignal kann an einem Schalter der gedruckten Leiterplatte zwischen FBAS und FBA umgeschaltet werden. Genaueres dazu siehe Teil 2.

⑥ Zeitcodeausgang [TIME CODE OUT] (BNC-Buchse)
Hier liegt das Zeitcodesignal an.
Schließen Sie diese Buchse an den TIME CODE IN-Anschluß des Zeitcodelesers oder Videorecorders an.

⑦ Audio-Kanal-1/2-Ausgänge [AUDIO OUT CH-1/CH-2] (XLR-Stiftbuchse)
Hier liegen die an den AUDIO LEVEL-Reglern am Bedienungsfeld auf der Vorderseite einstellbaren Audiosignale an.

⑧ Audio-Monitorausgang [AUDIO MONITOR OUT] (XLR-Stiftbuchse)
Schließen Sie hier das Gerät zur Tonüberwachung an. Die Wahl des Ausgangssignals erfolgt am AUDIO MONITOR-Wähler des Bedienungsfeldes.

⑨ Monitorausgang [MONITOR] (8-polig)
Hier liegen die Video- und Audiosignale an.
Schließen Sie über ein gesondert lieferbares Monitorkabel einen Farb-Monitor an. Das an diesem Anschluß anliegende Ausgangssignal kann am AUDIO MONITOR-Wähler des Bedienungsfeldes umgeschaltet werden.

⑩ Fernbedienungsanschluß 1 [REMOTE 1 (9P)] (9-polig, RS-422 spec.)
Zum Anschluß von Geräten mit 9-poligem Fernbedienungsanschluß: Videorecorder wie z.B. BVU-800P, BVU-820P und BVH-2000PS (unter Verwendung eines mitgelieferten Fernbedienungskabels) oder Schnitt-Steuereinheit wie z.B. BVE-800 und BVE-5000P.

⑪ Fernbedienungsanschluß 2 [REMOTE 2 (36P)] (36-polig)
Zum Anschluß einer Sony Schnitt-Steuereinheit der BVE-Serie wie z.B. BVE-500ACE oder BVE-5000P über ein gesondert lieferbares 36-poliges Fernbedienungskabel.
- Die Sony Fernbedienungseinheit BVR-510ACE kann nicht verwendet werden.

⑫ Netzanschluß [AC IN]
Zum Anschluß des mitgelieferten Netzkabels.

1-2-3. Hilfsbedienungsfeld

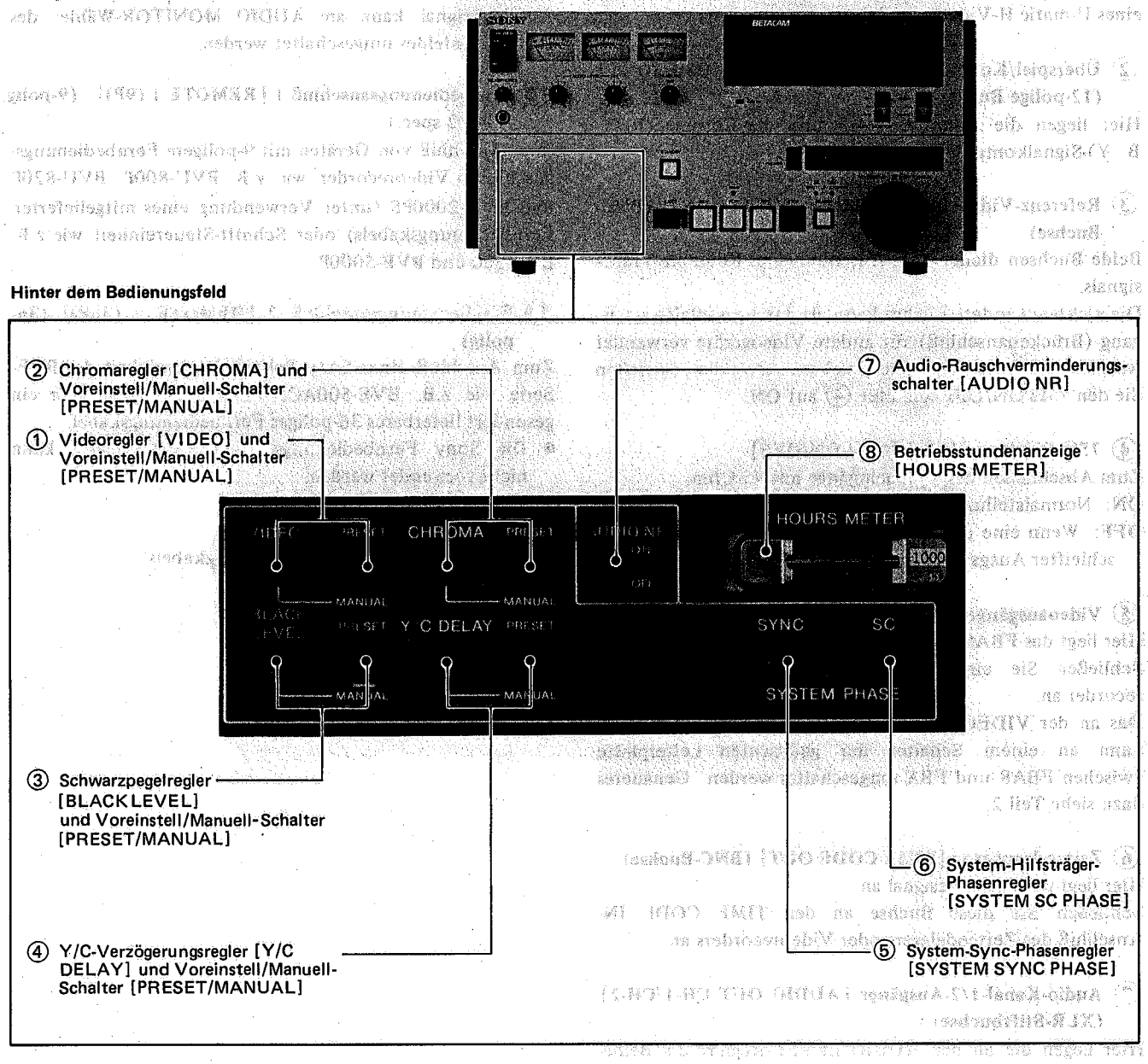

① **Videoregler [VIDEO] und Voreinstell/Manuell-Schalter [PRESET/MANUAL]**

Der PRESET/MANUAL-Schalter hat folgende Funktion:

MANUAL: Der Ausgangspegel des FBAS-Signals kann am VIDEO-Regler in einem Bereich von ±3 dB eingestellt werden. Am CHROMA-Regler kann der Chromapegel nicht über +3 dB eingestellt werden.

PRESET: Man erhält stets den voreingestellten Video-Ausgangspegel unabhängig von der Stellung des Reglers.

② **Chromaregler [CHROMA] und Voreinstell/Manuell-Schalter [PRESET/MANUAL]**

Der PRESET/MANUAL-Schalter hat folgende Funktion:

MANUAL: Der Ausgangspegel des Chromasignals kann am CHROMA-Regler in einem Bereich von ±3 dB eingestellt werden. Am VIDEO-Regler ist jedoch keine Einstellung über +3 dB möglich.

PRESET: Man erhält stets den voreingestellten Chromapegel unabhängig von der Stellung des Reglers.

③ **Schwarzpegelregler [BLACK LEVEL] und Voreinstell/Manuell-Schalter [PRESET/MANUAL]**

Der PRESET/MANUAL-Schalter hat folgende Funktion:

MANUAL: Der Ausgangs-Schwarzpegel kann am BLACK LEVEL-Regler in einem Bereich von 0 bis 15 IRE eingestellt werden.

PRESET: Man erhält stets den voreingestellten Ausgangs-Schwarzpegel unabhängig von der Stellung des Reglers.

④ **Y/C-Verzögerungsregler [Y/C DELAY] und Voreinstell/Manuell-Schalter [PRESET/MANUAL]**

Der PRESET/MANUAL-Schalter hat folgende Funktion:

MANUAL: Die Y/C-Verzögerung kann in einem Bereich von ±50 nsec eingestellt werden.

PRESET: Man erhält stets die eingestellte Y/C-Verzögerung unabhängig von der Stellung des Reglers.

⑤ **System-Sync-Phasenregler [SYSTEM SYNC PHASE]**

Die Ausgangs-Sync-Phase kann hier in einem Bereich von −1 μsec bis +3 μsec im Bezug auf das Referenz-Eingangssignal des BVW-10P eingestellt werden. Verwenden Sie diesen Regler z.B. um die Ausgangsphase auf die Referenz des Senders abzustimmen oder um Spezialeffekte wie z.B. Ein/Ausblenden oder weiches Überblenden zu erzielen, wenn zwei oder mehr Videorecorder an den BVW-10P angeschlossen sind.

⑥ **System-Hilfsträger-Phasenregler [SYSTEM SC PHASE]**

Die Ausgangs-Hilfsträgerphase kann hier in einem Bereich von 360°pp im Bezug auf das Referenz-Eingangssignal des BVW-10P eingestellt werden. Verwenden Sie diesen Regler z.B., um die Ausgangsphase auf die Referenz des Senders abzustimmen oder um Spezialeffekte wie z.B. Ein/Ausblenden oder weiches Überblenden zu erzielen, wenn zwei oder mehr Videorecorder an den BVW-10P angeschlossen sind.

⑦ **Audio-Rauschverminderungschalter [AUDIO NR]**

Das Gerät besitzt eine Dolby-C Audio-Rauschverminderung.

ON: Zur Wiedergabe eines mit Dolby NR bespielten Bandes.

OFF: Zur Wiedergabe eines nicht mit Dolby NR bespielten Bandes.

⑧ **Betriebsstundenanzeige [HOURS METER]**

Hier wird die Gesamt-Rotationszeit der Video-Kopftrommel angezeigt (bis max. 1000 Stunden).

1-3. ANSCHLÜSSE

1-3-1. Wiedergabe

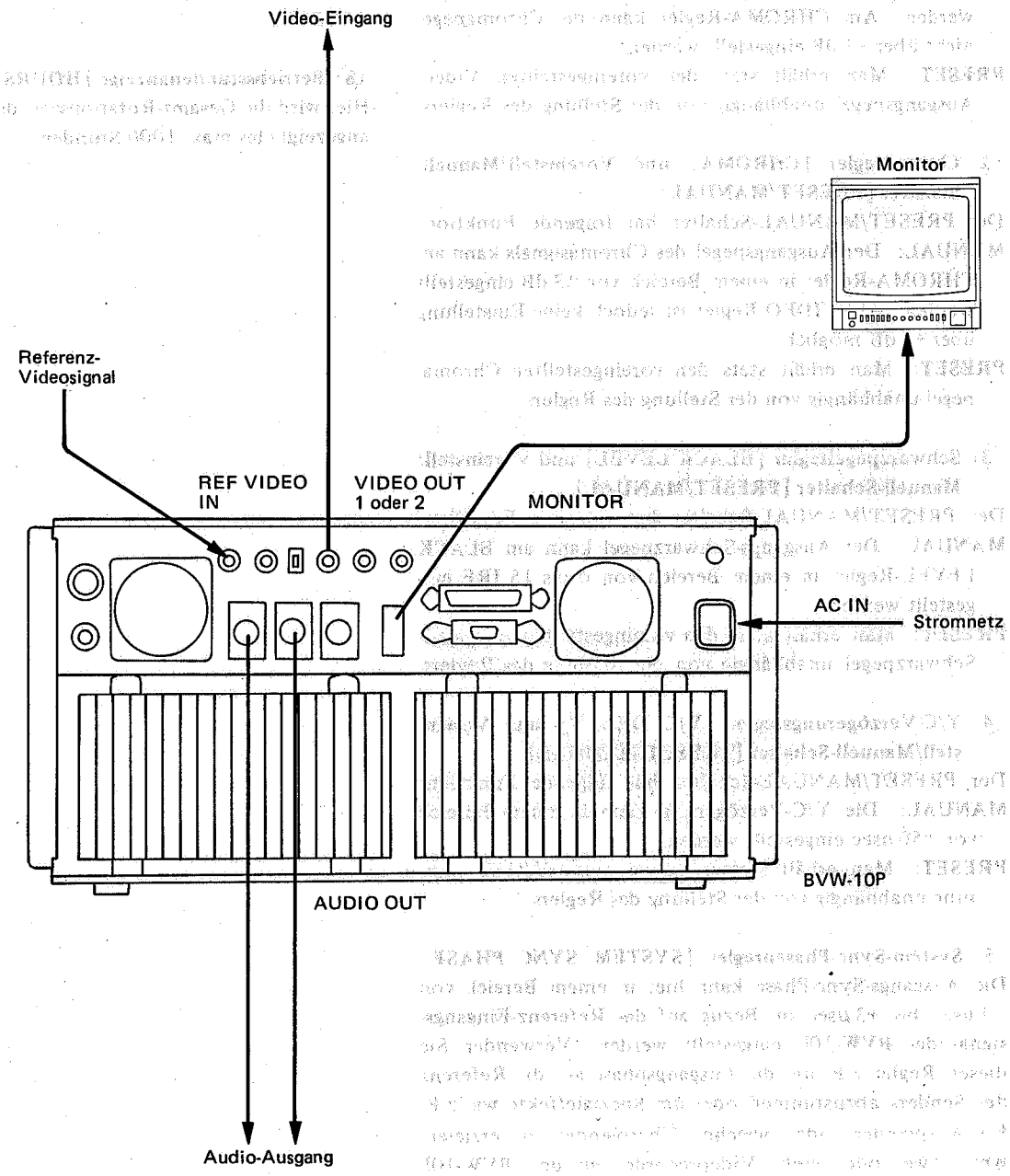

1-3-2. Schneiden mit 2 Videorecordern

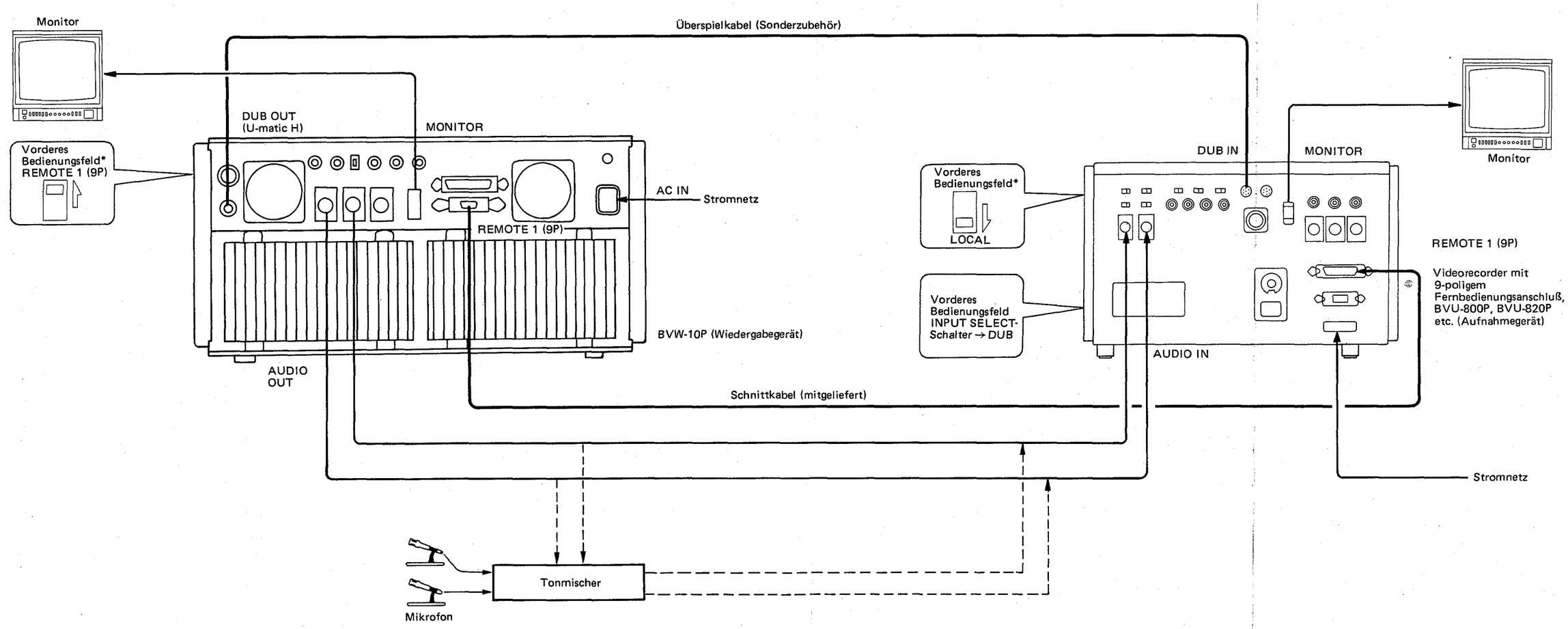

1-3-3. Schneiden mit einer Steuereinheit

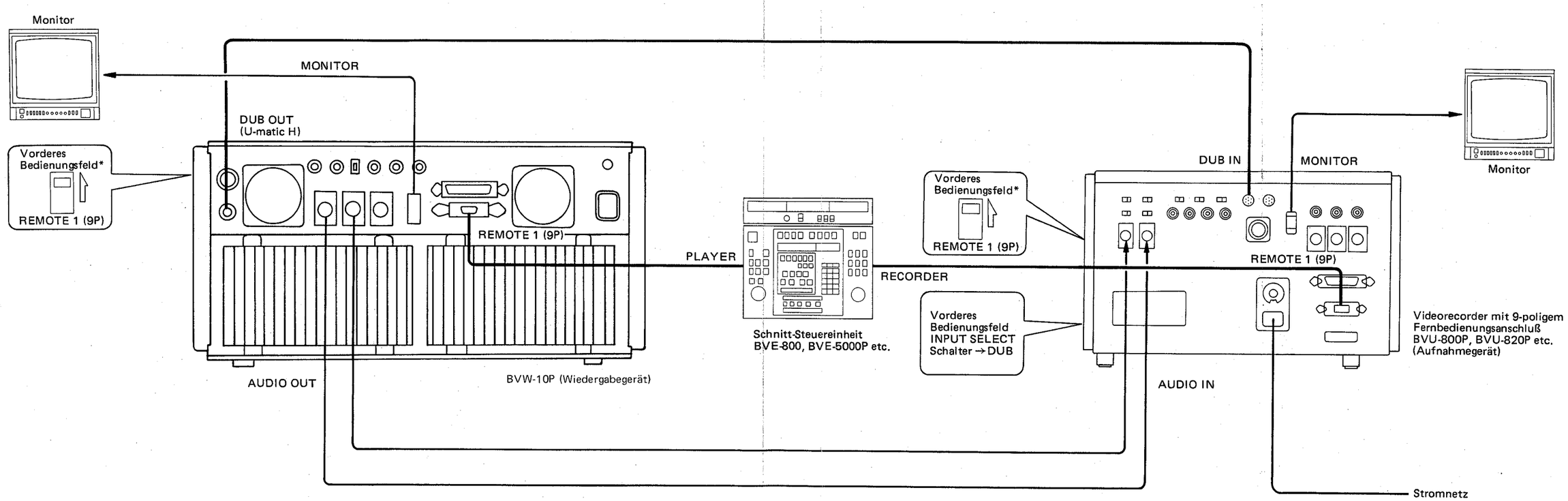

* Auf REMOTE 2 (36P) stellen, wenn zum Anschluß an eine Schnitt-Steuereinheit (BVE-500ACE etc.) und einen Videorecorder (BVU-200P etc.) ein 36-Stift-Anschluß verwendet wird.

1-4. EINLEGEN UND HERAUSNEHMEN DER CASSETTE

Einlegen der Cassette

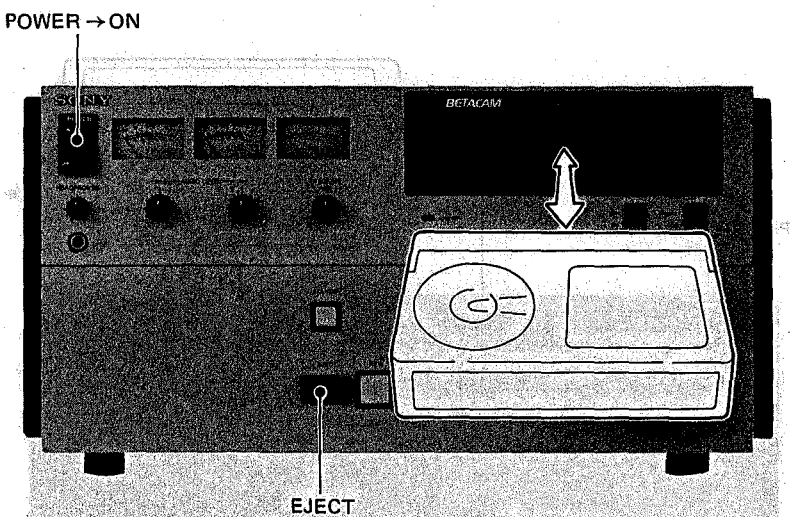

Das Band fädelt sich automatisch ein, die Kopftrommel beginnt sich zu drehen, und es erscheint ein Standbild.

Herausnehmen der Cassette

Drücken Sie bei eingeschaltetem POWER-Schalter die EJECT-Taste.

Hinweis: Nehmen Sie die Cassette stets nach dem Betrieb heraus.

1-5. WIEDERGABE

1-5-1. Vorbereitung

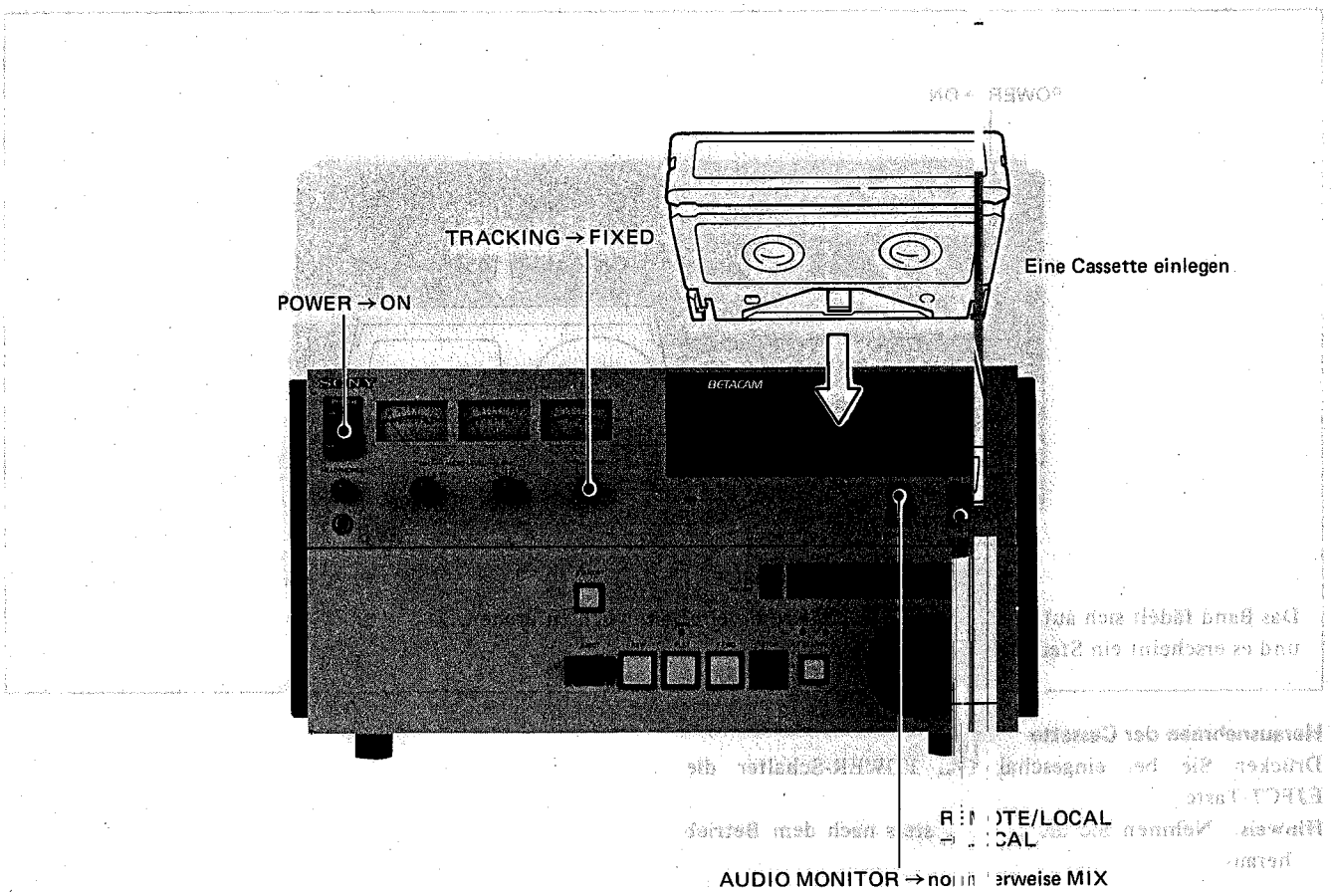

1-5-2. Betrieb

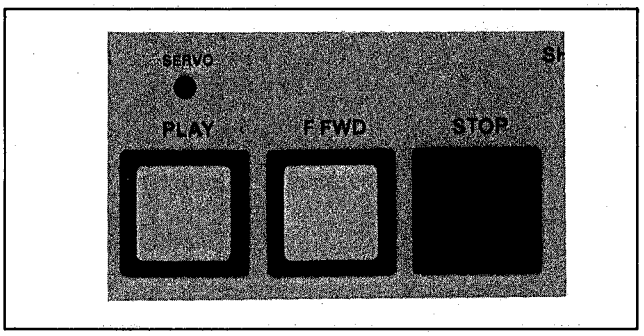

Starten der Wiedergabe

Drücken Sie die PLAY-Taste.

Die PLAY-Taste leuchtet auf.

Stoppen der Wiedergabe

Drücken Sie die STOP-Taste.

Die PLAY-Taste erlischt und die STOP-Taste leuchtet auf.

- Am Bandende wird das Band automatisch zum Anfang zurückgespult und stoppt dort.

1-5-3. Einstellungen

Einstellung der Spurlage

Stellen Sie den TRACKING-Regler normalerweise auf FIXED.

Ist das Wiedergabebild gestört, so drehen Sie den TRACKING-Regler nach links oder rechts, bis die TRACKING-Anzeige maximal ausschlägt.

- Nach der Wiedergabe dieses speziellen Bandes, stellen Sie den Regler auf FIXED zurück.

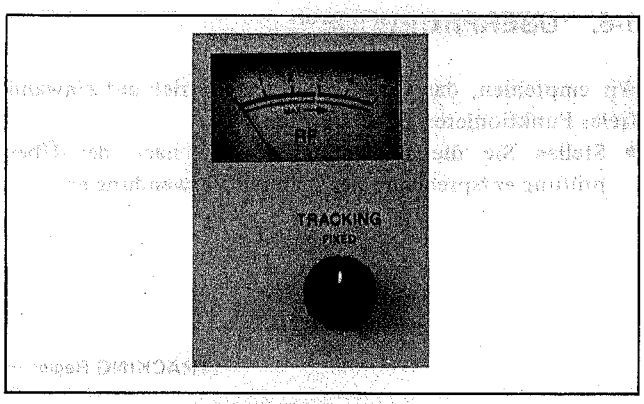

Einstellung des Audiopegels

Stellen Sie die AUDIO LEVEL-Regler für Kanal 1 und 2 so ein, daß die AUDIO LEVEL-Anzeigen beim Referenz-Ausgangspegel ungefähr null anzeigen.

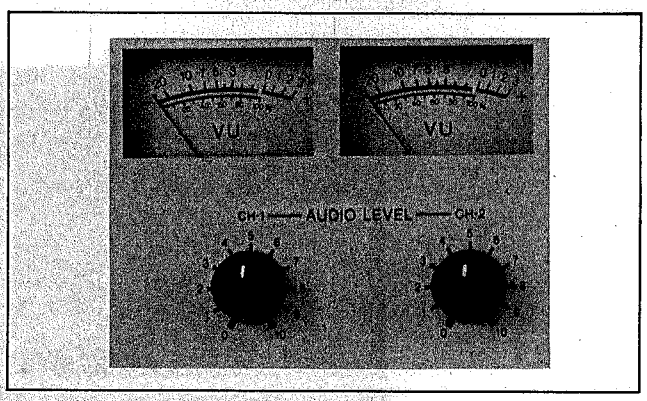

1-5-4. Bandschutzeinrichtungen

Bandschutz

Zum Schutz von Band und Videoköpfen schaltet das Gerät in eine der beiden folgenden Bandschutzfunktionen, wenn das Band für länger als 8 Minuten angehalten wird:

- Wenn sich das Gerät länger als 8 Minuten in der Stop-Funktion befindet, so wird die Bereitschaftsfunktion abgeschaltet, die Kopftrommel bleibt stehen, das Band lockert sich und die STANDBY-Taste erlischt.
  Durch Drücken der entsprechenden Taste kann das Gerät dann in die gewünschte Betriebsart geschaltet werden. Um bei ausgeschalteter Bereitschaftsfunktion ein Standbild zu erhalten, drücken Sie die STANDBY-Taste.
- Wird im Suchbetrieb ein Standbild länger als 8 Minuten angezeigt, so läuft das Band mit $^1/_{30}$ Normalgeschwindigkeit in Vorwärtsrichtung weiter.

Kondenswasserbildung

Hat sich im Inneren des Gerätes Kondenswasser gebildet, so spricht eine eingebaute Schutzschaltung an, Kopftrommel- und Capstanmotoren bleiben stehen und der AUTO OFF-Indikator am vorderen Bedienungsfeld erlischt. Ist eine Cassette eingelegt, so wird diese ausgeworfen. Danach beginnt die Kopftrommel wieder zu rotieren, damit die Trommeleinheit schneller trocknet.

- Wird das Gerät direkt von einem kalten in einen warmen Ort gebracht, so betreiben Sie es in den ersten 10 Minuten nicht, da es einige Minuten dauert, bevor die Feuchtigkeit an der Kopftrommel kondensiert und ein Aufleuchten des AUTO OFF-Indikators verursacht. Schalten Sie nach 10 Minuten den POWER-Schalter ein, und beachten Sie folgende Punkte.
  a) Leuchtet der Indikator nicht, so kann das Gerät betrieben werden.
  b) Leuchtet der Indikator, so lassen Sie das Gerät eingeschaltet und warten Sie, bis der Indikator erlischt. Während der Indikator leuchtet, kann keine Cassette eingelegt werden.

1-6. ÜBERPRÜFUNGEN

Wir empfehlen, das Gerät vor jedem Betrieb auf einwandfreies Funktionieren zu überprüfen.

- Stellen Sie die Bedienungselemente nach der Überprüfung entsprechend der späteren Verwendung ein.

Vorbereitung

Schließen Sie zunächst einen Video- und einen Audio-Monitor an und bereiten Sie eine Videocassette vor, auf der ein Videosignal sowie Audiokanal-1- und Audiokanal-2-Signale aufgezeichnet sind. (Verwenden Sie jedoch kein Abgleichband.)

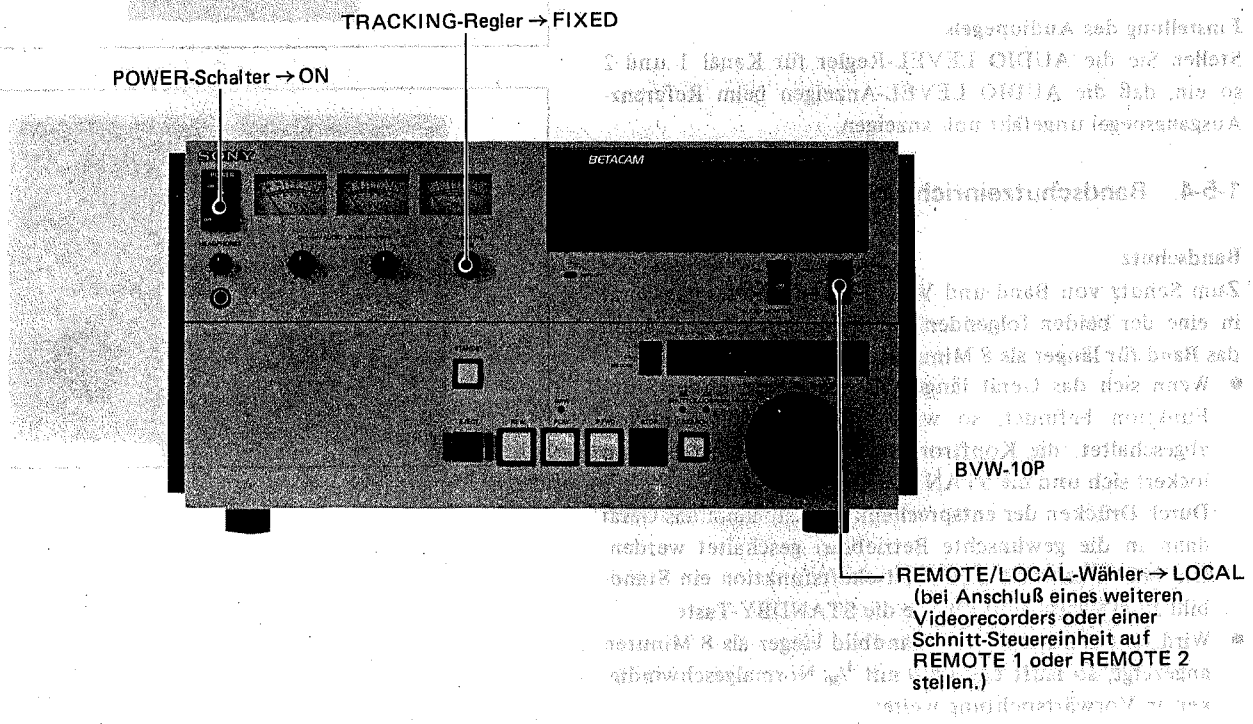

Bedienung	Überprüfungspunkte
Cassette einlegen.	• Ist die Cassette richtig eingelegt?
F FWD-Taste drücken.	• Das Band spult vor.
STOP-Taste drücken.	• Das Band stoppt und auf dem Monitor erscheint ein Standbild.
PLAY-Taste drücken.	• Das Wiedergabebild erscheint auf dem Bildschirm.
AUDIO MONITOR-Schalter auf CH-1 stellen.	• Tonkanal 1 ist zu hören.
AUDIO LEVEL CH-1-Regler nach rechts drehen.	• Der Zeiger der AUDIO LEVEL CH-1-Anzeige schlägt ganz nach rechts aus.
AUDIO MONITOR-Schalter auf CH-2 stellen.	• Tonkanal 2 ist zu hören.
AUDIO LEVEL CH-2-Regler nach rechts drehen.	• Der Zeiger der AUDIO LEVEL CH-2-Anzeige schlägt ganz nach rechts aus.
AUDIO MONITOR-Schalter auf MIX stellen.	• Ein Mischsignal aus Tonsignal 1 und 2 ist zu hören.
Kopfhörer an die HEADPHONES-Buchse anschließen.	• Tonkanal 1 und Tonkanal 2 ist vom linken bzw. rechten Kopfhörerkanal zu hören, wenn der AUDIO MONITOR-Schalter auf MIX steht.
CTL/TIME CODE-Wähler abwechselnd auf CTL und TIME CODE stellen.	• Beim Umschalten ändert sich die Anzeige.
CTL/TIME CODE-Wähler auf CTL stellen und RESET-Taste drücken.	• Der Zeitzähler schaltet auf Null zurück.

Bedienung	Überprüfungspunkte
SEARCH-Taste drücken.	• Der SEARCH-Indikator leuchtet auf.
Suchlaufknopf ausgerastet lassen und nach rechts drehen.	• Die Vorwärts-Wiedergabegeschwindigkeit vergrößert sich beim Drehen des Knopfes nach rechts. (Vorwärts-Shuttle-Betrieb) • Wird der Knopf bis zum Klickpunkt gedreht (x10), so fährt die Andruckrolle zurück und das Bild bleibt stehen oder ist kurzzeitig gestört.
Suchlaufknopf in die Mittelstellung zurückstellen.	• Es erscheint ein Standbild.
Suchlaufknopf ausgerastet lassen und nach links drehen.	• Die Rückwärts-Wiedergabegeschwindigkeit vergrößert sich beim Drehen des Knopfes nach links. (Rückwärts-Shuttle-Betrieb) • Wird der Knopf bis zum Klickpunkt gedreht (x−10), so fährt die Andruckrolle zurück und das Bild bleibt stehen oder ist kurzzeitig gestört.
Suchlaufknopf drücken.	• Es erscheint ein Standbild und die JOG-Taste leuchtet.
Suchlaufknopf nach rechts drehen.	• Das Band läuft entsprechend der Knopf-Drehgeschwindigkeit in Vorwärtsrichtung.
Suchlaufknopf nach links drehen.	• Das Band läuft entsprechend der Knopf-Drehgeschwindigkeit in Rückwärtsrichtung.
STOP- Taste und dann STANDBY-Taste drücken.	• Die STANDBY-Taste erlischt und das Monitorbild verschwindet. (Bereitschaftsbetrieb ausgeschaltet)
REW-Taste drücken.	• Das Band spult zurück und stoppt automatisch am Anfang. (Automatische Stop-Funktion)
EJECT-Taste drücken.	• Die Cassette wird ausgeworfen.

1-7. REINIGUNG DER KÖPFE

Verwenden Sie zur Reinigung der Video- und Tonköpfe die gesondert lieferbare Reinigungscassette L-25CL. Genaueres dazu siehe Anleitung der Reinigungscassette.

- Nehmen Sie die Reinigungscassette nach der Verwendung auf jeden Fall heraus, da die Kopftrommel auch in der Stop-Funktion rotiert.

1-8. TECHNISCHE DATEN

Mechanische Daten

Gewicht 30 kg
Abmessungen 452 x 239 x 580 mm (B/H/T)
Betriebsposition
Horizontal (bis 30°)
Bandtransportmechanismus
Betacam-System
Videocassette
HG-20 Cassette oder entsprechender Typ
Bandgeschwindigkeit
101,5mm/sec
Wiedergabezeit max. 20 Min. mit HG-20 Cassette
Vorspul-/Rückspulzeit
Weniger als 90 sec mit HG-20 Cassette
Suchlaufgeschwindigkeit
SHUTTLE: Standbild, 1/30, 1/10, 1/5, 1/2, 1, 2, 5 und 10fache Normalgeschwindigkeit in Vorwärts- und Rückwärtsrichtung.
JOG: Standbild bis 1-fache Normalgescheindigkeit in Vorwärts- und Rückwärtsrichtung.
Anschlüsse
AC IN 3 Leitungen, parallele Erde
VIDEO OUT 1/2
BNC-Buchse
AUDIO OUT CH-1/CH-2/MONITOR
XLR-Stiftbuchsen
TIME CODE OUT
BNC-Buchse
DUB OUT (U-matic H)
7-Pol-Buchse
DUB/COMP OUT
12-Pol-Buchse
MONITOR 8-Pol-Anschluß
REMOTE 1 (9P)
9-Pol-Anschluß
REMOTE 2 (36P)
36-Pol-Anschluß
HEADPHONES
JM-60 Kopfhörer Stereo-Klinkenbuchse
REF VIDEO IN 1/2
BNC-Buchse
Betriebstemperatur
5°C bis 40°C
Lagertemperatur
−20°C bis +60°C

Elektrische Daten

Versorgungsspannung
90 - 265 V Wechselspannung, 48 - 64 Hz
Leistungsaufnahme
160 W

Video

Video-Aufzeichnungssystem
Luminanz: FM
Chroma: komprimiertes Zeitmultiplex FM-Signal
Bandbreite Luminanz: 30 Hz - 4,0 MHz $^{+0,5}_{-6,0}$ dB
Chroma (R−Y): 30 Hz - 1,5 MHz $^{+0,5}_{-3,0}$ dB
(B−Y): 30 Hz - 1,5 MHz $^{+0,5}_{-3,0}$ dB
Signal-Rauschabstand
Luminanz: Mehr als 46 dB
AM: Mehr als 49 dB
PM: Mehr als 49 dB
K-Faktor (2T−Impuls)
3%
Differentialgewinn
3%
Differentialphase
3°
Y/C-Verzögerung
20 ns
Eingang REF VIDEO IN
1,0 Vss ±0,3 V, 75 Ohm, ein/ausschaltbar
Ausgang VIDEO OUT 1
FBAS-Signal: 1,0 Vss, 75 Ohm, negative Synchronisation
FBA-Signal: 0,7 Vss, 75 Ohm
VIDEO OUT 2
FBAS-Signal: 1,0 Vss, 75 Ohm, negative Synchronisation
FBA-Signal: 0,7 Vss, 75 Ohm
DUB OUT (U-matic H)
Luminanz: 0,5 Vss, 75 Ohm, negative Synchronisation
Chroma: 0,5 Vss, 75 Ohm
(Heruntergesetzter Hilfsträger)
DUB/COMP OUT
Luminanz: 1,0 Vss, 75 Ohm, negative Synchronisation
Chroma (R−Y): 0,7 Vss, 75 Ohm
(B−Y): 0,7 Vss, 75 Ohm

Audio

Frequenzgang 50 Hz - 15 kHz ±3,0 dB
Signal-Rauschabstand
Mehr als 50 dB (ohne Dolby, bei 3% Klirrgrad)
Klirrfaktor Weniger als 2% (1 kHz, Referenzpegel)
Ausgang AUDIO OUT CH-1/CH-2/MONITOR:
+4 dB, niedrige Impedanz, symmetrisch (erlaubte Last 600 Ohm)
Zeitcode 2,2 Vss (erlaubte Lastimpedanz bis 600 Ohm)

Prozessor-Einstellbereich

Videopegel ±3 dB
Chromapegel ±3 dB
Schwarzpegel 0 - +15 IRE
System-Hilfsträger-Phase
360° ss
System-Sync-Phase
$^{+3}_{-1}$ µs
Y/C-Verzögerung
±50 ns
Mitgeliefertes Zubehör
Netzkabel (1)
Fernbedienungskabel RCC-5G (9-Pol auf 9-Pol) (1)

Sonderzubehör

Gestellmontagesatz RMM-100
Überspielkabel VDC-5 (5 m)
Reinigungscassette L-25CL

Action	Check point
Insert a cassette.	● The cassette is properly inserted.
Press the F FWD button.	● The tape advances rapidly.
Press the STOP button.	● The tape stops. A still picture will appear on the monitor screen.
Press the PLAY button.	● The playback picture appears on the screen.
Set the AUDIO MONITOR switch to CH-1.	● The audio channel 1 sound is heard from the monitor.
Turn the AUDIO LEVEL CH-1 control to the right.	● The pointer of the AUDIO LEVEL CH-1 meter deflects to the far right.
Set the AUDIO MONITOR switch to CH-2.	● The audio channel 2 sound is heard from the monitor.
Turn the AUDIO LEVEL CH-2 control to the right.	● The pointer of the AUDIO LEVEL CH-2 meter deflects to the far right.
Set the AUDIO MONITOR switch to MIX.	● The mixed sound of the audio channel 1 and 2 is heard from the monitor.
Connect headphones to the HEADPHONES jack.	● The CH-1 and CH-2 sounds are heard from the left and right respectively when the AUDIO MONITOR switch is set to MIX.
Set the CTL/TIME CODE selector to CTL and TIME CODE alternately.	● The indications changes when the selector position is changed.
Set the CTL/TIME CODE selector to CTL and press the RESET button.	● The figure on the time counter returns to 0.

Action	Check point
Press the SEARCH button.	● The SEARCH lamp lights.
Turn the search dial to the right with the search dial released.	● The forward playback speed is accelerated as the dial turns to the right. (Forward shuttle mode) ● When the dial is turned to the click position (x10), the pinch roller is released and the picture stops or is distorted for a moment.
Return the dial to the center position.	● A still picture appears.
Turn the search dial to the left with the search dial released.	● The reverse playback speed is accelerated as the dial turns to the left. (Reverse shuttle mode) ● When the dial is turned to the click position (x−10), the pinch roller is released and the picture stops or is distorted for a moment.
Press the search dial in.	● A still picture appears. The JOG lamp lights.
Turn the search dial to the right.	● The tape advances in the forward direction with the dial rotation speed as the dial rotates.
Turn the search dial to the left.	● The tape advances in the reverse direction with the dial rotation speed as the dial rotates.
Press the STOP button and then the STANDBY button.	● The STANDBY lamp goes off and the picture on the monitor disappears. (Standby-off)
Press the REW button.	● The tape rewinds. The tape stops automatically at the beginning. (Auto stop)
Press the EJECT button.	● The cassette is ejected.

1-7. HEAD CLEANING

Clean the video heads and the audio heads with the L-25CL video head cleaning cassette (optional). For details, refer to the instructions which come with the cleaning cassette.

- As the head drum rotates even in the stop mode, be sure to eject the cleaning cassette after use.

1-8. SPECIFICATIONS

Mechanical

Weight 30 kg (66 lb 2 oz)
Dimensions 452 x 239 x 580 mm (w/h/d)
(17⅞ x 9½ x 22⅞ inches)
Operating position
Horizontal (within 30°)
Tape transport mechanism
Betacam system
Video cassettes
HG-20 cassette (1/2-inch cassette for Beta format) and equivalent
Tape speed 101.5 mm/s
Playback time 20 min max. with an HG-20 cassette
Fast forward/rewind time
Less than 90 sec. with an HG-20
Search speed SHUTTLE: still, 1/30, 1/10, 1/5, 1/2, 1, 2, 5 and 10 times normal in forward and reverse directions
JOG: still to 1 in forward and reverse directions

Connectors
AC IN 3-wire parallel ground
VIDEO OUT 1/2
BNC connector
AUDIO OUT CH-1/CH-2/MONITOR:
XLR male connectors
TIME CODE OUT: BNC connector
DUB OUT (U-matic H)
7-pin female connector
DUB/COMP OUT
12-pin female connector
MONITOR 8-pin connector
REMOTE 1 (9P)
9-pin connector
REMOTE 2 (36P)
36-pin connector
HEADPHONES
JM-60 headphone stereo phone jack
REF VIDEO IN 1/2
BNC connector

Operating temperature
5°C to 40°C (41°F to 104°F)
Storage temperature
−20°C to +60°C (−4°F to +140°F)

Electrical

Power requirements
AC 90 - 265 V, 48 - 64 Hz
Power consumption
160 W

Video

Video recording system
Luminance: FM
Chrominance: compressed time division multiplex FM
Bandwidth Luminance: 30 Hz - 4.0 MHz $^{+0.5}_{-6.0}$ dB
Chrominance: R−Y 30 Hz - 1.5 MHz $^{+0.5}_{-3.0}$ dB
B−Y 30 Hz - 1.5 MHz $^{+0.5}_{-3.0}$ dB
Signal to noise ratio
Luminance: More than 46 dB
AM: More than 49 dB
PM: More than 49 dB
K-factor (2T pulse)
3%
DG 3%
DP 3°
Y/C delay 20 ns
Input REF VIDEO IN
1.0 Vp-p ± 0.3 V, 75 ohms ON/OFF
Output VIDEO OUT 1
Composite video, 1.0 Vp-p, 75 ohms, sync negative
VIDEO OUT 2
Composite video, 1.0 Vp-p, 75 ohms, sync negative
Non-composite, 0.7 Vp-p, 75 ohms
DUB OUT (U-matic H)
Luminance:
0.5 Vp-p, 75 ohms, sync negative
Chrominance:
0.5 Vp-p, 75 ohms
(SC low-range conversion)
DUB/COMP OUT
Luminance:
1.0 Vp-p, 75 ohms, sync negative
Chrominance:
R−Y 0.7 Vp-p, 75 ohms
B−Y 0.7 Vp-p, 75 ohms

Audio

Frequency response
50 Hz − 15 kHz ±3.0 dB
Signal to noise ratio
More than 50 dB (at 3% distortion level, without the audio NR system)
Distortion Less than 2% (1 kHz reference level)
Output AUDIO OUT CH-1/CH-2/MONITOR:
+4 dB, low impedance, balanced (600 ohm load permissible)
Time code 2.2 Vp-p (600 ohm load permissible)

Processor adjustment range

Video level ±3 dB
Chroma level ±3 dB
Black level 0 − +15 IRE
System SC phase
360° p-p
System sync phase
$^{+3}_{-1}$ μs
Y/C delay ±50 ns
Accessories supplied
AC power cord (1)
Remote control cable RCC-5G (9-pin to 9-pin) (1)

Optional accessories

Rack mount kit RMM-100
Dubbing cable VDC-5 (5 m)
Cleaning cassette L-25CL

Außenansicht

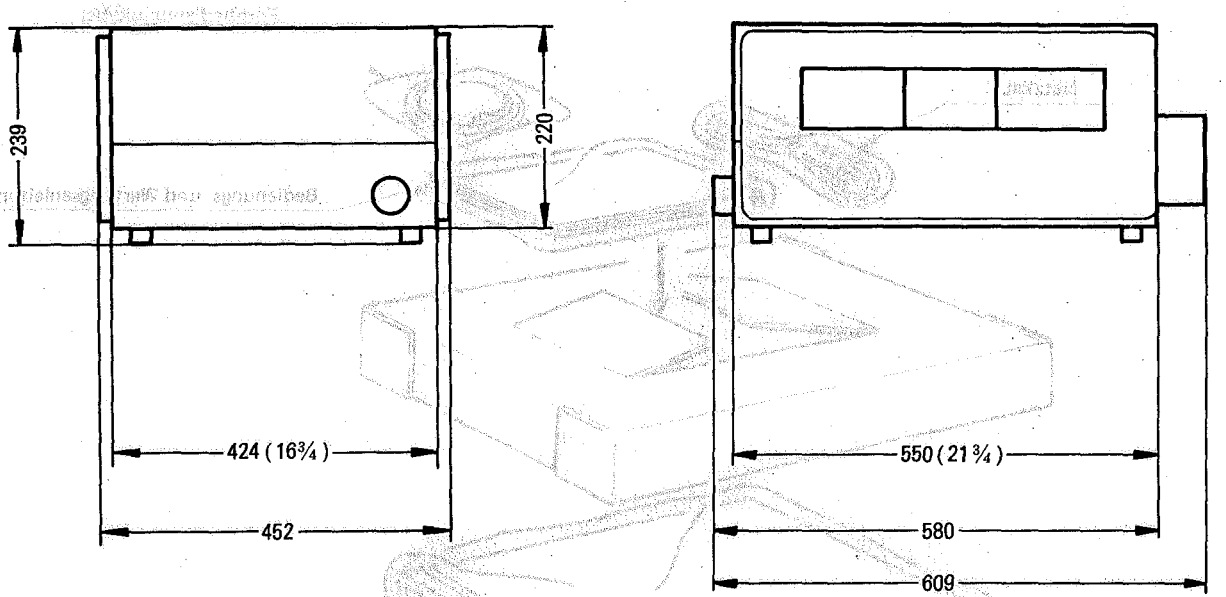

Abmessungen für Gestellmontage (Seitenteile abgenommen)

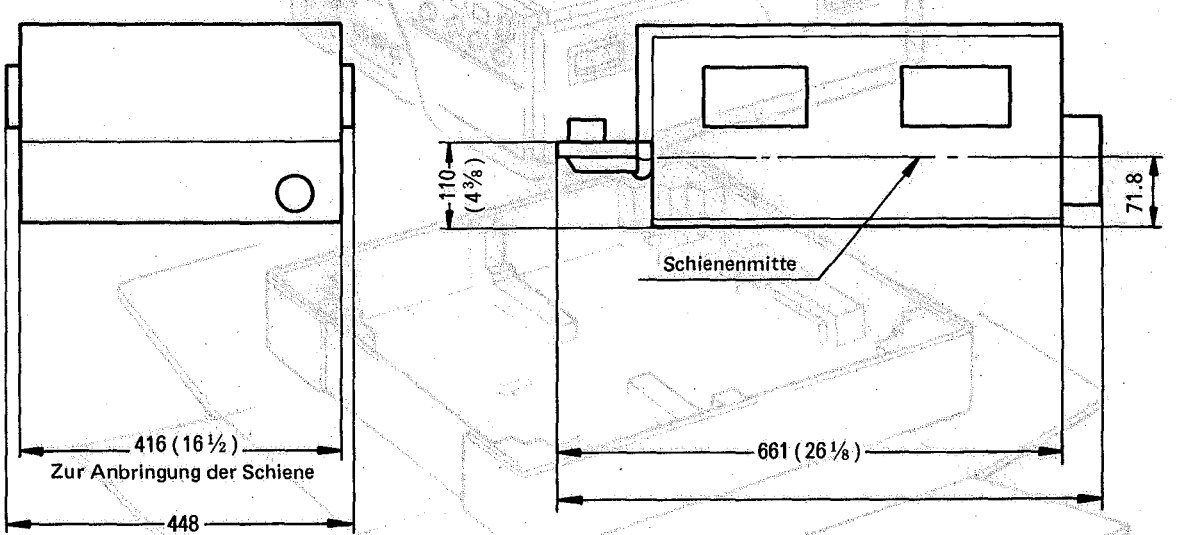

Einheit: mm (Zoll)

1-9. WIEDERVERPACKEN ZUM TRANSPORT

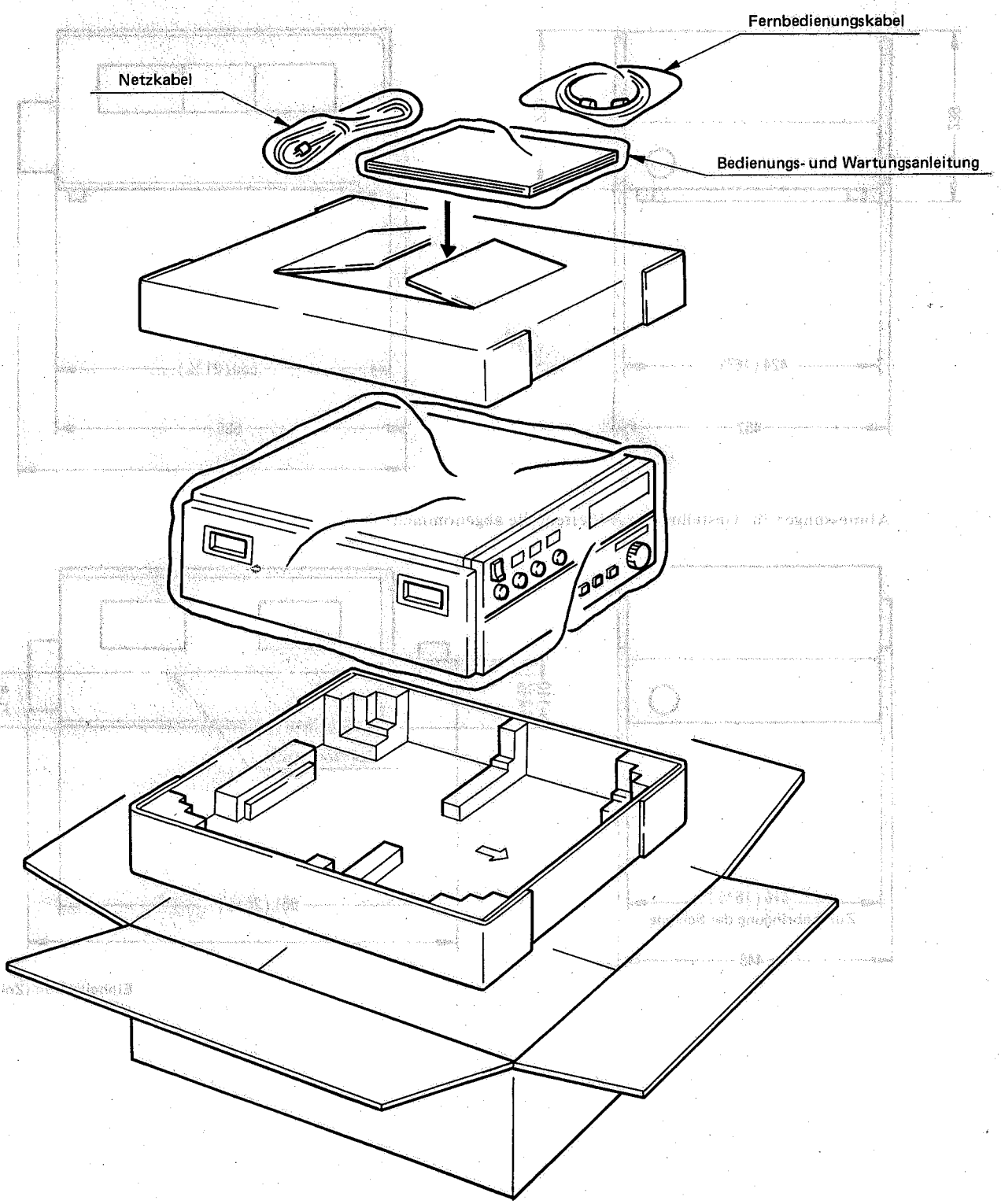

SECTION 2
INSTALLATION

Be sure to install the BVW-10P at the installation space under the required operational environment as regulated below. It will assure the BVW-10P's superior performance while maintaining the excellent serviceability and accessibility.

2-1. OPERATIONAL ENVIRONMENT

1. The operating temperature range:
   +5°C ~ +40°C
   (Good air circulation is essential to prevent internal heat build-up. Place the set in locations with sufficient air circulation. Do not block the ventilation holes on the cabinet and the rear panel.)
2. The storage temperature range:
   −20°C ~ +60°C
3. Avoidance installation areas:
   - Areas where the BVW-10P will be exposed to direct sunlight, or any other strong direct lights.
   - Dusty areas or areas where it is subject to vibration.
   - Areas where high electric or magnetic fields are to be found.
   - Areas near heat sources.

2-2. INSTALLATION SPACE

1. The outer dimensions of the set are shown in the figure below. The rear side of the set must be at least 40 cm away from the wall for ventilation and maintenance.
2. When the set is operated on the desk or similar condition, assure that the vertical clearance above the BVW-10P is at least 40 cm to provide the accessability to the printed circuit boards and other mechanical parts. But note that it is not necessary to provide the space when the set is mounted in a rack since the printed circuit boards can be repaired after the set is pulled out.

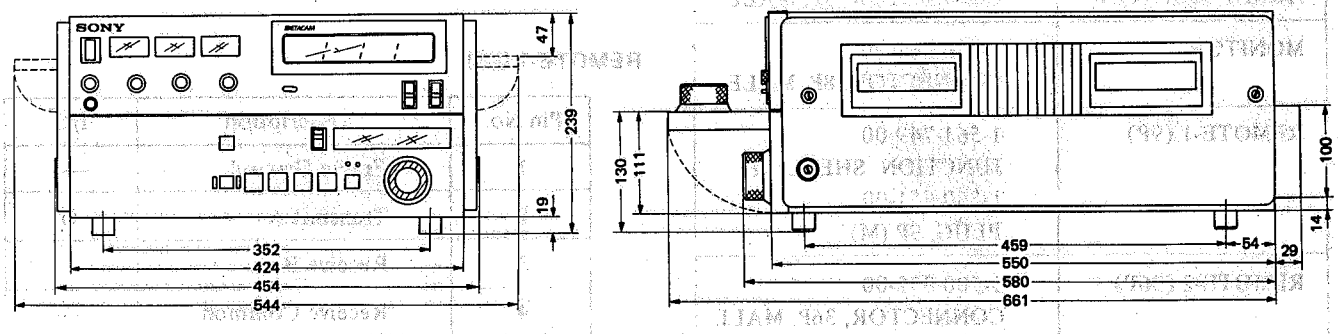

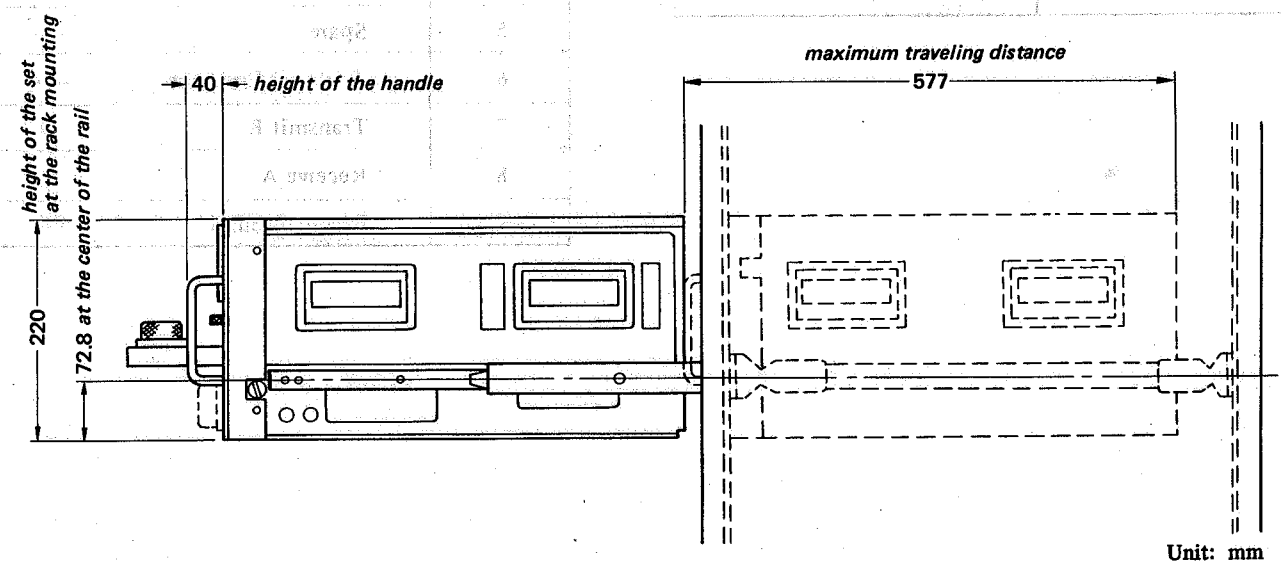

Unit: mm

2-3. OPERATING VOLTAGE

100 V ±10% ~ 240 V ±10%
48 Hz ~ 64 Hz
The power consumption: 160W

2-4. CONNECTORS FOR OPTIONAL CONNECTION

When external cables are connected to the various connectors on the BVW-10P connector panel during the installation or the maintenance, hardwares as stated below or the equivalents must be used.

Panel Indication	Connection Connector
REF. VIDEO IN VIDEO OUT TIME CODE OUT	1-560-069-11 PLUG, BNC, MALE
DUB OUT	1-508-948-00 PLUG, 7P, MALE
DUB/COMP OUT	1-560-995-00 PLUG, 12P, MALE
AUDIO OUT AUDIO MONITOR	1-508-083-00 CONNECTOR, 3P, MALE
MONITOR	1-506-161-00 CONNECTOR, 8P, MALE
REMOTE-1 (9P)	1-561-749-00 JUNCTION SHELL, 9P 1-560-651-00 PLUG, 9P (M)
REMOTE-2 (36P)	1-508-852-00 CONNECTOR, 36P, MALE

2-5. INPUT/OUTPUT SIGNAL OF THE CONNECTOR

INPUT

REF. VIDEO IN : 1.0 Vp-p ±0.3 V, 75 ohms ON/OFF

OUTPUT

VIDEO OUT 1 : composite, 1.0 Vp-p, sync negative, 75 ohms
VIDEO OUT 2 : composite, 1.0 Vp-p, sync negative, 75 ohms
non-composite, 0.7 Vp-p, 75 ohms
DUB OUT : luminance signal, 0.5 Vp-p, 75 ohms, sync negative
chrominance signal, 0.5 Vp-p, 75 ohms (SC low-range conversion)
DUB/COMP OUT : luminance signal, 1.0 Vp-p, 75 ohms, sync negative
chrominance signal
R–Y, 0.7 Vp-p, 75 ohms
B–Y, 0.7 Vp-p, 75 ohms
AUDIO OUT / AUDIO MONITOR OUT : +4 dB, low impedance, balanced (600 ohm load permissible)
TIME CODE OUT: 2.2 Vp-p (600 ohm load permissible)

REMOTE-1 (9P)

Pin No.	Description	I/O
1	Frame Ground	—
2	Transmit A	O
3	Receive B	I
4	Receive Common	—
5	Spare	—
6	Transmit Common	—
7	Transmit B	O
8	Receive A	I
9	Frame Ground	—

REMOTE-2 (36P)

Pin No.	Description	LEVEL
1	UNREG 5 V	TTL
2	L - FF COMMAND IN	TTL
3	L - FWD COMMAND IN	TTL
4	L - REW COMMAND IN	TTL
5	L - EJECT COMMAND IN	TTL
6	L - STOP COMMAND IN	TTL
7	L - PAUSE COMMAND IN	TTL
8	——	——
9	——	——
10	——	——
11	——	——
12	L - FF STATUS OUT	TTL
13	L - FWD STATUS OUT	TTL
14	L - REW STATUS OUT	TTL
15	L - STANDBY STATUS OUT	TTL
16	L - STOP STATUS OUT	TTL
17	L - PAUSE STATUS 1 IN/OUT	TTL
18	——	——
19	——	——
20	——	——
21	——	——
22	——	——
23	L - REVERSE COMMAND IN	TTL
24	SPEED A IN	TTL
25	SPEED B IN	TTL
26	L - CTL PULSE OUT	TTL
27	L - TACH OUT	TTL
28	L - CAPSTAN LOCK OUT	TTL
29	SYNCHRONIZE IN	3.0 V : 0% −0.3 V : −10 ~ −15% +6 V : +10 ~ +15%
30	NC	——

Pin No.	Description	LEVEL
31	H - NORMAL FWD IN	TTL
32	L - PAUSE STATUS 2 OUT	TTL
33	L - SEARCH STATUS IN	TTL
34	NC	—
35	GND	—
36	GND	—

2-6. SELECT SWITCH SETTING

Along with the select switches on the control panel and the connector panel, the switches listed below are on the circuit boards. The switches must be used according to systems and conditions.

EN-20 BOARD

SW1. COMP/NON COMP select switch

COMP: The composite video signal is fed out from VIDEO OUT-2 connector.

NON COMP: The non-composite video signal is fed out from VIDEO OUT-2 connector.

When the set is shipped, the COMP/NON COMP select switch is set to the COMP position.

SW2. CHROMA ON/OFF switch

ON: The luminance signal is fed out after mixed with the chroma signal from VIDEO OUT 1/2 connectors.

OFF: The only luminance signal is fed out.

When the set is shipped, the CHROMA ON/OFF switch is set to the ON position.

AU-37 BOARD

S1. REC/PLAY select switch

This switch is used for electrical alignment.

When the set is shipped, the REC/PLAY select switch is set to the PLAY position.

TC-25 BOARD

S1-1. EBU/SMPTE select switch

OFF: SMPTE time code signal

ON: EBU time code signal

When the set is shipped, the EBU/SMPTE select switch is set to the ON position.

S1-2. 50/60 select switch

OFF: 60 (SMPTE time code signal)

ON: 50 (EBU time code signal)

When the set is shipped, the 50/60 select switch is set to the ON position.

S1-3. TIME CODE/AUTO modes select switch

OFF: AUTO mode

In normal operation, playing back time code signal is fed out. When the time code signal is missing, interpolated signal with CTL signal is fed out.

ON: TIME CODE mode

Only the playing back time code signal is fed out from time code out terminal on TC-25 board.

When the set is shipped, the TIME CODE/AUTO modes select switch is set to the OFF position.

S1-4. ERROR BYPASS ON/OFF switch

ON: The ERROR BYPASS circuit is activated

OFF: The ERROR BYPASS circuit is disable

When the set is shipped, the ERROR BYPASS ON/OFF switch is set to the ON position.

When the TIME CODE/AUTO modes select switch is turned to AUTO mode, this switch is disable.

S1-8. FACTORY MODE ONLY switch

This switch is used for the factory check

When the set is shipped, the FACTORY MODE ONLY switch is set to the OFF position.

S1-5 ~ S1-7: These switches does not have a function.

SY-91 BOARD

S1. SEARCH DIRECT/KEY select switch

ON: The set is turned into the SEARCH mode according to turn the SEARCH dial in any mode without pressing SEARCH button.

OFF: The set is turned into the SEARCH mode according to turn the SEARCH dial after pressing the SEARCH button in any mode.

When the set is shipped, the SEARCH DIRECT/KEY select switch is set to the ON position.

S4-6. TROUBLE INHIBIT switch

OFF: The protection circuit is activated.

ON: The protection circuit of the tape slack and so on is disable.

When the set is shipped, the TROUBLE INHIBIT switch is set to the OFF position.

S4-7. UNTHREAD INHIBIT switch
This switch is used for mechanical alignment.
When the set is shipped, the UNTHREAD INHIBIT switch is set to the OFF position.

S4-8. NTSC/CCIR select switch
ON: NTSC
OFF: CCIR
When the set is shipped, the NTSC/CCIR select switch is set to the OFF position.

S4-1 ~ S4-5: System check switch
The information for the system check is described Sec. 4, Service Information (available later).

2-7. RACK MOUNTING

The BVW-10P can be mounted in the 19-inch standard rack. It is recommended to use the RACK MOUNT KIT, RMM-100, optional parts (including the slide rails and the handle brackets) or the following ACCURIDE'S slide rail.
RACK-MOUNT SLIDES MODEL 305
SLIDE LENGTH 22 INCH

1. Loosen two mounting screws on the right and the left side panels.
   - Mounting screws will not be detached since it use a retainer on the inside the cover.

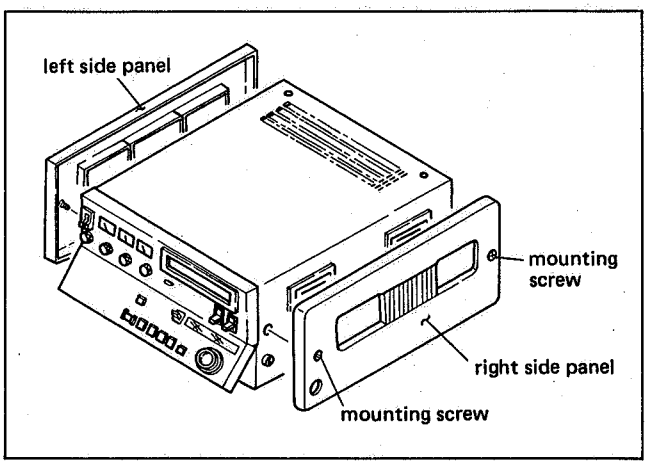

2. Remove the each fine mounting screws on the (R) chassis and the (L) chassis.

3. Attach the inner members of the slide rails to the (R) chassis and the (L) chassis with the screws removed in step (2).
   - Length of the screws used for the attachment is limited. If the screws supplied with the chassis are lost, a screw less than 10 mm in length must be used.
   - The inner member must be fixed at four points with the screws.

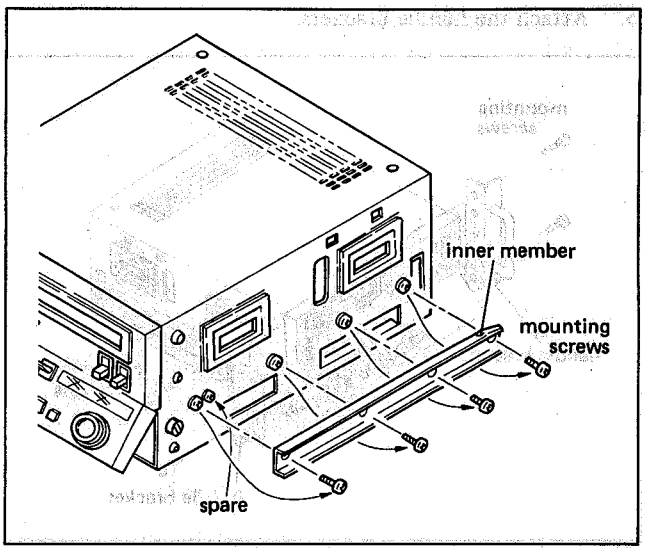

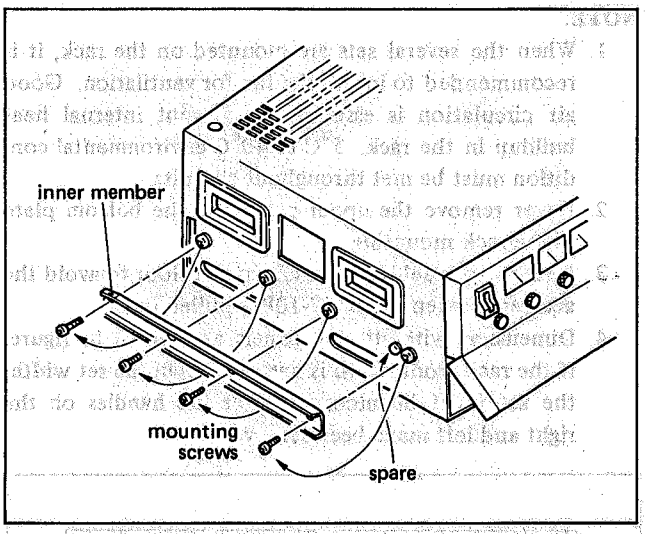

4. Remove four legs located under the set
   - If the set is mounted in the rack without removing the legs. It will contact the lower set and the upper set cannot be pulled out from the rack.

5. Attach the outer member bracket of the slide rail to the rack and position from the edge of the slide rail to the outside of the rack so that the position satisfies to the specified value.

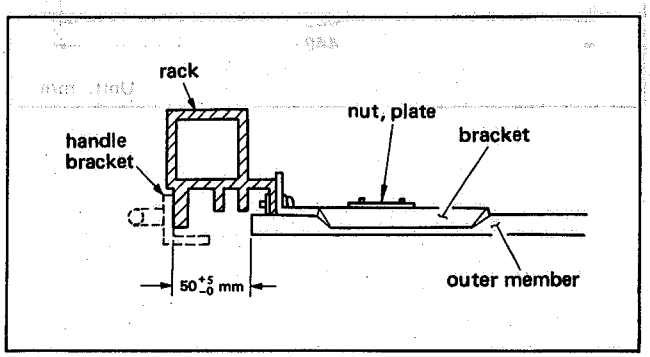

6. Attach the handle brackets.

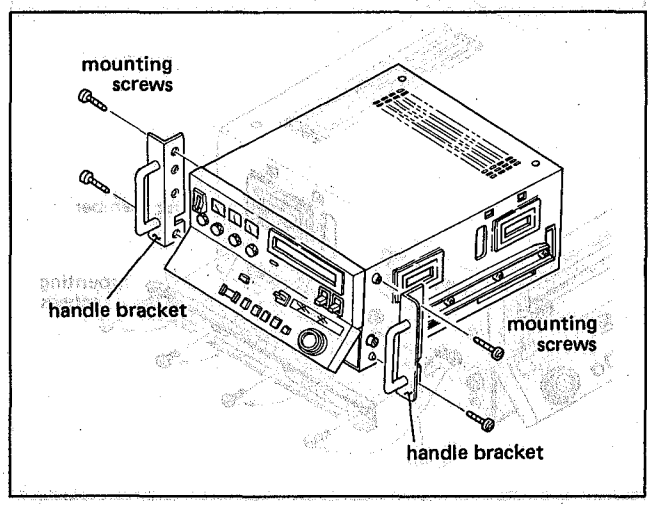

NOTE:

1. When the several sets are mounted on the rack, it is recommended to install the fan for ventilation. Good air circulation is essential to prevent internal heat buildup in the rack. 5°C to 40°C environmental condition must be met throughout all units.
2. Never remove the upper panel and the bottom plate at the rack mounting.
3. Be sure to stabilize the rack to the floor to avoid the accidents when the BVW-10P is pulled out.
4. Dimension without side panels are shown in figure. If the rack front width is narrower than the set width, the set must be mounted after the handles on the right and left made been removed.

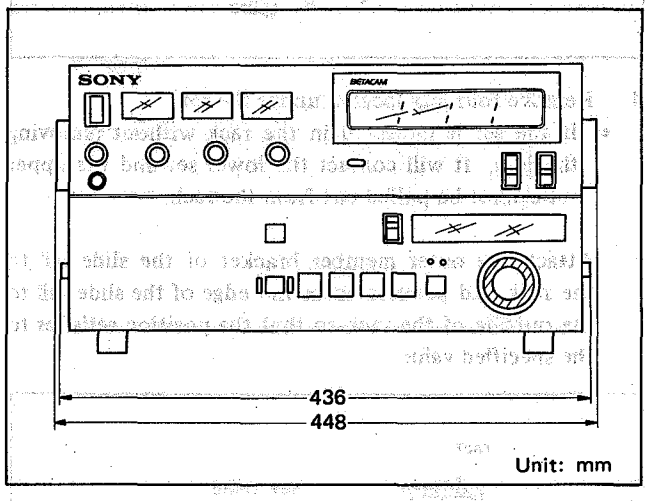

2-8. SUPPLIED ACCESSORY

Supplied BVW-10P accessories are as follows.

1. AC Power Cord
2. 9-Pin Remote Control Cable, RCC-5G

2-9. OPTIONAL ACCESSORY

The followings are provided as the optional accessory. The suitable accessory should be used for each system.

1. Rack Mount Kit (RMM-100)
   The rack mount kit is used for mounting the BVW-10P on the 19-inch standard rack or console. This mounting kit consists of two slide-rails and two types of handle-brackets.
2. 9-Pin Remote Control Cable
   Three kinds of 9-pin remote control cable are provided.

Type		Length
RCC-5G	:	5 m
RCC-10G	:	10 m
RCC-30G	:	30 m

NOTE: The remote cable can be extended up to 1200 m.

SECTION 3
TECHNICAL INFORMATION

3-1. SPECIFICATIONS

Mechanical

Weight 30 kg (66 lb 2 oz)
Dimensions 452 x 239 x 580 mm (w/h/d)
($17\frac{7}{8}$ x $9\frac{1}{2}$ x $22\frac{7}{8}$ inches)
Operating position
Horizontal (within 30°)
Tape transport mechanism
Betacam system
Video cassettes
HG-20 cassette (1/2-inch cassette for Beta format) and equivalent
Tape speed 101.5 mm/s
Playback time 20 min max. with an HG-20 cassette
Fast forward/rewind time
Less than 90 sec. with an HG-20
Search speed SHUTTLE: still, $\frac{1}{30}$, $\frac{1}{10}$, $\frac{1}{5}$, $\frac{1}{2}$, 1, 2, 5 and 10 times normal in forward and reverse directions
JOG: still to 1 in forward and reverse directions
Connectors
AC IN 3-wire parallel ground
VIDEO OUT 1/2
BNC connector
AUDIO OUT CH-1/CH-2/MONITOR:
XLR male connectors
TIME CODE OUT: BNC connector
DUB OUT (U-matic H)
7-pin female connector
DUB/COMP OUT
12-pin female connector
MONITOR 8-pin connector
REMOTE 1 (9P)
9-pin connector
REMOTE 2 (36P)
36-pin connector
HEADPHONES
JM-60 headphone stereo phone jack
REF VIDEO IN 1/2
BNC connector
Operating temperature
5°C to 40°C (41°F to 104°F)
Storage temperature
−20°C to +60°C (−4°F to +140°F)

Electrical

Power requirements
100 V$^{\pm 10\%}$ ~ 240 V$^{\pm 10\%}$, 48 - 64 Hz
Power consumption
160 W

Video

Video recording system
Luminance: FM
Chrominance: compressed time division multiplex FM
Bandwidth Luminance: 30 Hz - 4.0 MHz$^{+0.5}_{-6.0}$ dB
Chrominance: R−Y, 30 Hz - 1.5 MHz$^{+0.5}_{-3.0}$ dB
B−Y, 30 Hz - 1.5 MHz$^{+0.5}_{-3.0}$ dB
Signal to noise ratio
Luminance: Better than 46 dB
AM: Better than 49 dB
PM: Better than 49 dB
K-factor (2T pulse)
Less than 3%
DG Less than 3%
DP Less than 3°
Y/C delay Less than 20 ns
Input REF VIDEO IN
1.0 Vp-p ±0.3 V, 75 ohms ON/OFF
Output VIDEO OUT 1
Composite video, 1.0 Vp-p, 75 ohms, sync negative
VIDEO OUT 2
Composite video, 1.0 Vp-p, 75 ohms, sync negative
Non-composite, 0.7 Vp-p, 75 ohms
DUB OUT (U-matic H)
Luminance:
0.5 Vp-p (at load impedance of 75 ohms), sync negative
Chrominance:
0.5 Vp-p (at load impedance of 75 ohms) (SC low-range conversion)
DUB/COMP OUT
Luminance:
1.0 Vp-p, 75 ohms, sync negative
Chrominance:
R−Y, 0.7 Vp-p, 75 ohms
B−Y, 0.7 Vp-p, 75 ohms

Audio

Frequency response
50 Hz - 15 kHz ±3.0 dB
Signal to noise ratio
Better than 50 dB (at 3% distortion level, without the audio NR system)
Distortion Less than 2% (1 kHz reference level)
Output AUDIO OUT CH-1/CH-2/MONITOR:
+4 dB, low impedance, balanced (600 ohm load permissible)
Time code 2.2 Vp-p (600 ohm load permissible)

Processor adjustment range

Video level ±3 dB
Chroma level ±3 dB
Black level 0 - +15 IRE
System SC phase
360° p-p
System sync phase
$^{+3}_{-1}$ μs
Y/C delay ±50 ns

3-2. LOCATION OF THE PRINTED CIRCUIT BOARD

<TOP VIEW>

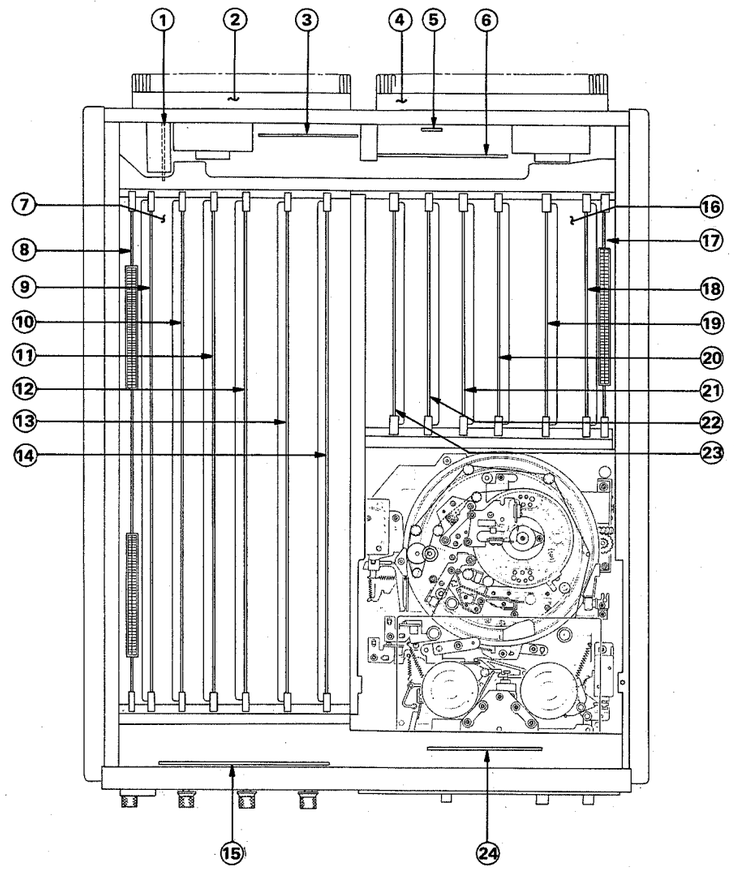

① AC-40 board
② UR-07
③ RE-6 board
④ UR-06
⑤ SW-86 board
⑥ CP-56 board
⑦ MB-41 board
⑧ EX-30 board
⑨ CK-14 board
⑩ MY-17 board
⑪ PR-48 board
⑫ EN-20 board
⑬ SV-51 board
⑭ SY-91 board
⑮ CP-52 board
⑯ MB-42 board
⑰ EX-31 board
⑱ PS-16 board
⑲ AU-37 board
⑳ YD-15 board
㉑ CD-25 board
㉒ CF-12 board
㉓ TC-25 board
㉔ DE-12 board

<FRONT VIEW>

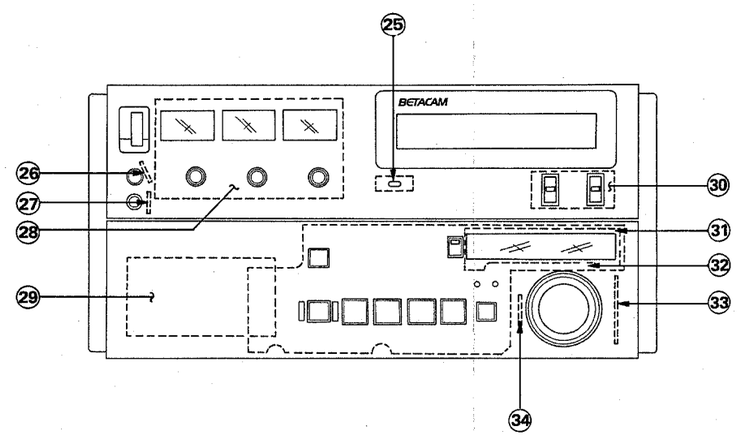

㉕ LA-4 board
㉖ VR-8 board
㉗ HP-7 board
㉘ CP-52 board
㉙ ST-22 board
㉚ SW-85 board
㉛ DP-30 board
㉜ KY-32 board
㉝ PC-9 board
㉞ PC-14 board

<TOP VIEW>

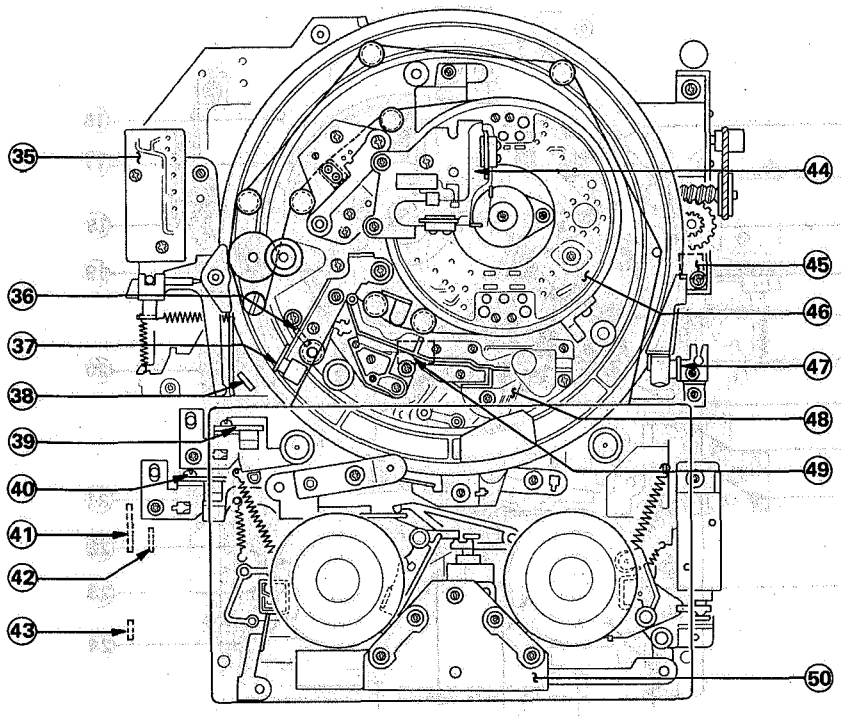

㉟ PD-20 board
㊱ PH-16 board
㊲ SS-8 board
㊳ LE-19 board
㊴ TE-2 board
㊵ TE-2 board
㊶ CL-7 board (cassette-up compartment)
㊷ PC-18 board (cassette-up compartment)
㊸ PC-17 board (cassette-up compartment)
㊹ SR-18 board
㊺ LM-4 board
㊻ PB-8 board
㊼ SS-8 board
㊽ TR-14 board
㊾ HE-5 board
㊿ DE-11 board

3-3. LOCATION OF THE MECHANICAL MAIN PARTS/COMPONENTS

<TOP VIEW>

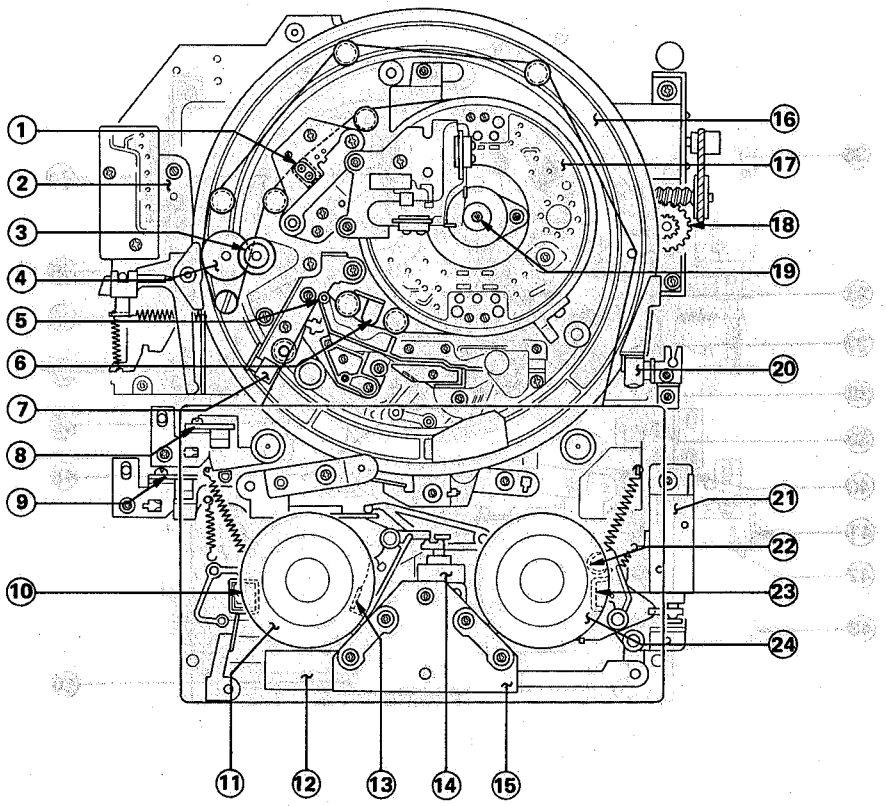

① Audio/TC head
② Pinch solenoid block
③ Capstan shaft
④ Pinch roller
⑤ Supply tension regulator
⑥ CTL head
⑦ Tape end sensor
⑧ Threading end detector
⑨ Threading end/unthreading end detector
⑩ Supply reel main brake
⑪ Supply reel table
⑫ Main brake solenoid
⑬ Supply reel soft brake
⑭ Supply reel brake solenoid
⑮ Reel table rotation detector
⑯ Threading ring
⑰ Head drum
⑱ Threading gear box
⑲ Slip ring
⑳ Tape beginning sensor
㉑ Take-up reel brake solenoid
㉒ Take-up reel brake
㉓ Take-up reel main brake
㉔ Take-up reel table

3-4. PRINTED CIRCUIT BOARDS

The circuit information is provided below.

System	Board	Circuit function
Video	PB-8	• PB RF amplifier
	EN-20	• Video encoder
	YD-15	• Luminance signal demodulator
	CD-25	• Chrominance signal demodulator
	CF-12	• Chrominance signal comb filter
Audio	AU-37	• Audio PB system
	VR-8	• Headphones level control
	HP-7	• Headphones jack
	SW-85	• Audio monitor select
Servo	SV-51	• Servo system
	DE-11	• Reel FG
	DE-12	• Reel FG amplifier
	PS-16	• Reel motor driver
Time code	TC-25	• Time code reader
TBC	CK-14	• Video TBC
	MY-17	
	PR-48	
	ST-22	• TBC control panel
System control	SY-91	• System control
	KY-32	• Key panel
	DP-30	• Time counter display
	PS-16	• Tape beginning sensor • Tape end sensor • Humid sensor • Brake solenoid driver • Pinch solenoid driver
	TC-25	• Threading motor driver • Cassette-up motor driver
	SW-85	• Remote select
	PC-9	• Search dial
	PC-14	• Search dial
	PD-20	• Pinch solenoid
	PH-16	• Tape roll sensor (photo-transistor)
	LE-19	• Tape roll sensor (LED)
	SS-8	• Tape beginning sensor • Tape end sensor
	TE-2	• Threading/unthreading end detector

System	Board	Circuit function
System control	TR-14	• Tape tension sensor
	LA-4	• Auto off lamp
	RE-6	• Remote connector panel
	LM-4	• Threading motor
Power	UR-06	• Switching regulator
	UR-07	• Switching regulator
	AC-40	• AC line filter
	PS-16	• DC regulator
	SW-86	• Connector panel
	CP-56	• Connector panel
	CP-52	• Control panel
	CL-7	• Cassette-up compartment
	PC-18	• Cassette-up compartment
	PC-17	• Cassette-up compartment
	SR-18	• Brush board
	HE-5	• Drum heater
	MB-41	• Mother board
	MB-42	• Mother board
	EX-30	• Extension board
	EX-31	• Extension board

3-4 PRINTED CIRCUIT BOARDS

The circuit information is provided below.

System	Board	Circuit function
Video	PB-8	• PB 8 amplifier
	PA-20	• Video amplifier
	YD-15	• Luminance signal demodulator
	CD-12	• Chrominance signal demodulator
	CT-11	• Chrominance signal comb filter
	AU-37	• Audio PB system
Video	VR-4	• Headphone level control
	HP-3	• Headphone jack
	SW-33	• Audio monitor switch
	SW-51	• Servo system
Servo	DP-11	• Reel FG
	DP-1	• Reel FG amplifier
	PS-15	• Reel motor driver
Tape guide	TG-24	• Tape guide
Tape	CA-1	
	MV-12	• Video FM
	PA-1	
	SI-22	• FM control panel
	SY-33	• System control
	RY-1	• Relay panel
	IN-30	• Tape counter display
		• Tape operating unit
		• Tape end sensor
	PA-1	• Timer section
		• Reel + capstan motor
		• Reel + capstan drive
		• Tape loading motor drive
		• Cassette in sensor
System control	WM-4	• Power supply
		• Power relay
		• Power line
		• Surge filter
	PD-3	• Power switch
	PM-1	• Tape cassette compartment
	LL-14	• Tape full sensor (LED)
		• Tape [illegible] sensor
		• Tape [illegible] sensor
	TT-2	• Tape [illegible]

System	Board	Circuit function
System control	TR-14	• Tape remote sensor
	LA-1	• Auto off lamp
	RE-1	• Power supply sensor
Power	LM-1	• Threading motor
	LR-14	• Switching mechanism
	LR-1	• Switching regulator
	AC-40	• AC line filter
	PS-1	• Power supply
	SW-40	• Connector panel
	CP-40	• Connector panel
	CP-2	• Control panel
	SL-1	• Cassette-up compartment
	PC-14	• Cassette-up compartment
	PC-1	• Cassette-up compartment
	VR-15	• Bias power
	HS-1	• Drum motor
	MB-4	• Motor board
	VR-12	• Motor board
	EX-30	• Extension board
	EX-31	• Extension board

SECTION 4
PERIODIC CHECK AND MAINTENANCE

4-1. SYSTEM CONTROL OPERATION CHECK

It is recommended that the following is checked daily before the operation.
The check procedure described here is only for the BVW-10P but can be applied on the operation with the remote control unit.
Note that the switches must be set according to the way the machine is used after the check.

Equipment : Recorded tape (Video, Audio CH-1/CH-2, Time Code). (Do not utilize an alignment tape.)
Video and audio monitor

With switches set to : POWER → ON
REMOTE/LOCAL → LOCAL
TRACKING knob → FIXED
AUDIO MONITOR → CH-1
CTL/TIME CODE sw → CTL

ACTION	Check that
Insert the cassette.	● Auto OFF lamp does not light.
Press F-FWD.	● The tape fast forwards.
Press STOP.	● The tape stops. (Still picture of the tape appears.)
Press PLAY.	● The playback picture appears. Audio CH-1 are present. Turn AUDIO LEVEL CH-1 knob in clockwise, VU meter pointer swings.
Turn AUDIO MONITOR switch into CH-2.	● Audio CH-2 are present. Turn AUDIO LEVEL CH-2 knob in clockwise, VU meter pointer swings.
Turn AUDIO MONITOR switch into MIX.	● Audio CH-1 and CH-2 mixed sound are present.
Connect the headphones to terminal.	● When AUDIO MONITOR switch is MIX position, CH-1 and CH-2 sound are present from right and left side each others.
Press RESET button.	● The display set "00 00 00".
Turn CTL/TIME CODE switch into TIME CODE.	● The display data changes.

ACTION	Check that
Turn SEARCH dial to the right.	● The playback speed changes from low to high.
Turn SEARCH dial to right until the position at which a click is felt.	● The machine putted into the fast forward mode (x10).
Return SEARCH dial to the center position.	● The still picture in SHUTTLE mode appears.
Turn SEARCH dial to the left.	● The playback speed changes from low to high.
Turn the SEARCH dial to the left until the position at which a click is felt.	● The machine putted into the rewind mode (x10).
Press SEARCH dial in.	● The still picture in JOG mode appears.
Turn the SEARCH dial to the right.	● The forward playback picture in the JOG mode appears.
Turn the SEARCH dial to the left.	● The rewind playback picture in the JOG mode appears.
Press STOP button.	
Press STANDBY button.	● STANDBY lamp lights. The still picture does not appear.
Press REW button.	● The tape rewinds. At the beginning of the tape, the tape stops automatically.
Press EJECT button.	● The cassette is ejected.

4-2. MAINTENANCE TIME TABLE

It is recommended that the following periodic check and maintenance schedule be employed in order to obtain maximum performance and longer tape life from the BVW-10P

Periodic check and maintenance schedule is going to be available soon.

4-3. HOURS METER

Open the function control panel by loosing the stopper screws on both right and left sides. The hours meter placed at the back side of the function control panel.
The hours meter accumulates and records the elapsed time of the following modes; PLAY, STOP, F-FWD, REW and SEARCH modes. It is recommended that the hours meter is used as a tool for determining the periodic check. When whe hours meter indicates the maximum value, 1000 hours, the hours meter must be replaced with a new one.
(SONY Part No.: 1-548-100-11)

4-4. CLEANING PROCEDURE

Perform the cleaning as the following procedure. After cleaning, insert a cassette tape after the cleaning fluid evaporate completely.

4-4-1. Video Head

Press the cleaning piece moistened with the cleaning fluid and turn the drum slowly with hand.
(Note) 1. Never move the cleaning piece in the vertical direction of the head tip in the cleaning.
2. Perform the cleaning with the power OFF.

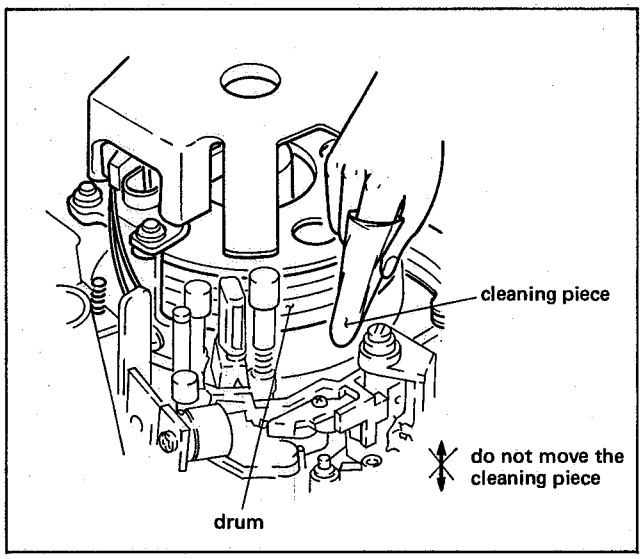

4-4-2. Stationary Heads

Clean with the cleaning piece moistened with the cleaning fluid.

4-4-3. Tape Movement Areas

Wipe the tape bearing surface (of the tape guides, drum, capstan and pinch roller) with a piece of cleaning piece moistened with the cleaning fluid.
(Note) Do not clean the surface condensation sensor on the lower drum with the cleaning cloth moistened with the cleaning fluid. Clean the surface with dry cloth.

4-5. MAINTENANCE AFTER REPAIRS

Perform the following maintenance after repair without regarding the machine operating hours.
1. Video heads and stationary heads cleaning.
(Referring sec. 4-4-1. and 4-4-2.)
2. Tape movement area cleaning.
(Referring sec. 4-4-3.)

SECTION 5
SERVICE INFORMATION

5-1. REMOVAL OF CABINET

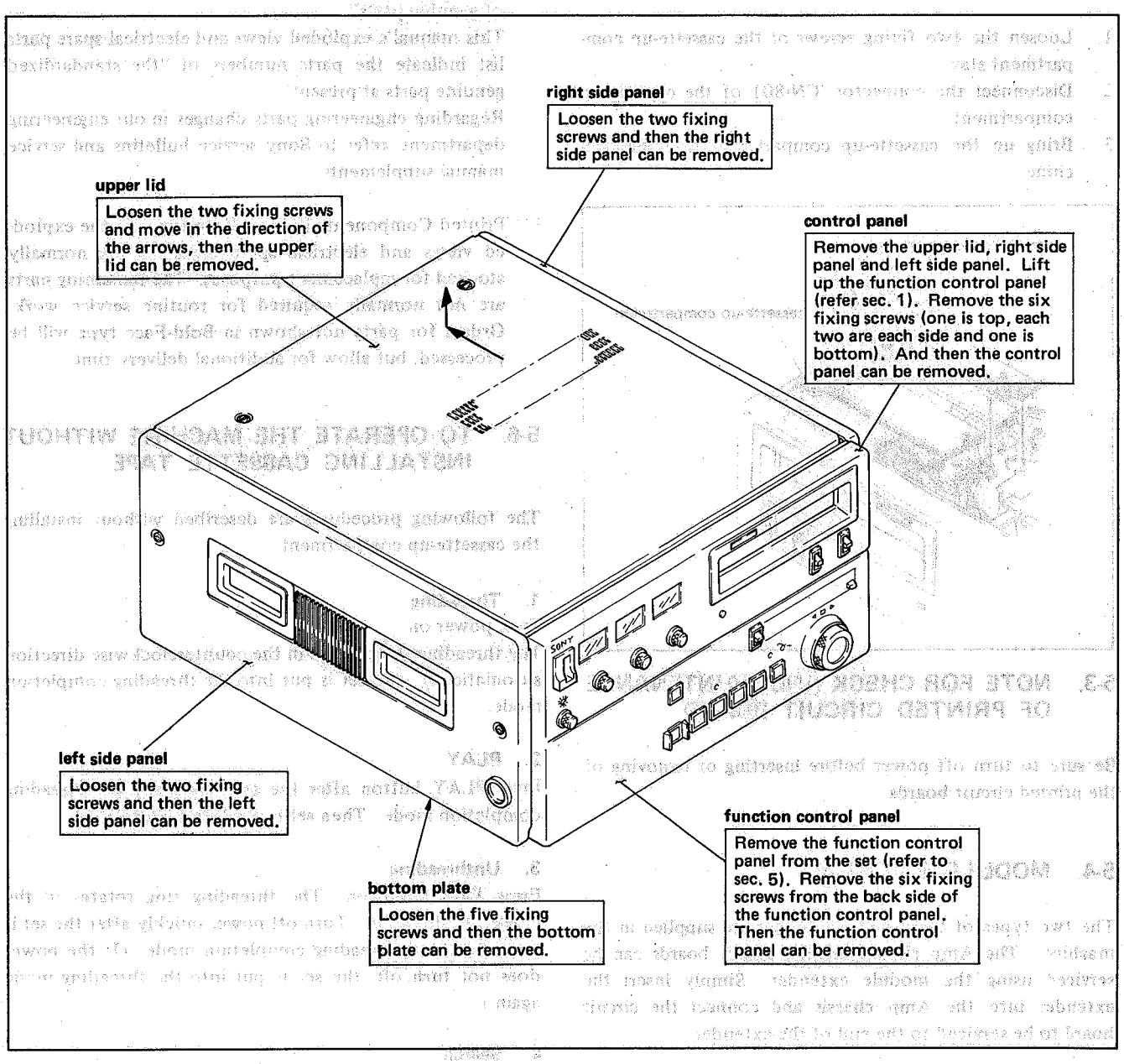

5-2. REMOVAL OF CASSETTE-UP COMPARTMENT

1. Loosen the two fixing screws of the cassette-up compartment stay.
2. Disconnect the connector, CN-801 of the cassette-up compartment.
3. Bring up the cassette-up compartment from the machine.

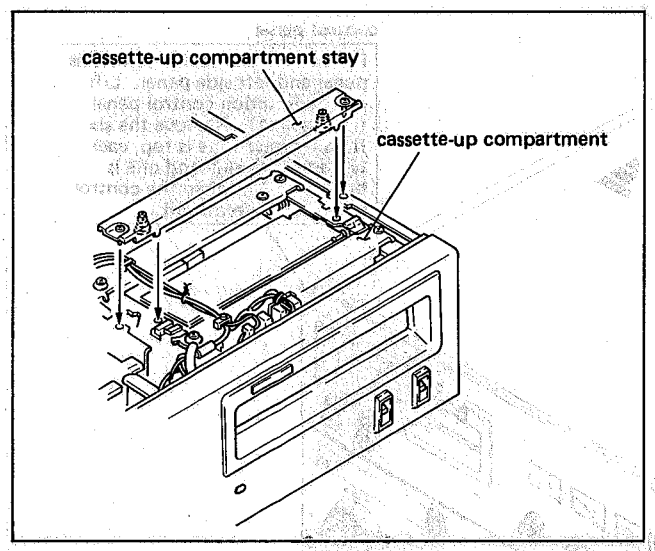

5-3. NOTE FOR CHECK AND MAINTENANCE OF PRINTED CIRCUIT BOARD

Be sure to turn off power before inserting or removing of the printed circuit boards.

5-4. MODULE EXTENDER

The two types of the module extender are supplied in the machine. The Amp chassis printed circuit boards can be serviced using the module extender. Simply insert the extender into the Amp chassis and connect the circuit board to be serviced to the end of the extender.

5-5. SPARE PARTS

1. Safety Related Components Warning.
   Components identified by shading marked with ⚠ on the schematic diagrams, exploded views and electrical spare parts list are critical to safe operation. Replace these components with Sony parts whose part numbers appear in this manual or in service bulletins and service manual supplements published by Sony.

2. Replacement Parts supplied from Sony Parts Center will sometimes have a different shape from the original parts. This is due to "accommodating the improved parts and/or engineering changes" or "standardization of genuine parts".
   This manual's exploded views and electrical spare parts list indicate the parts numbers of "the standardized genuine parts at present".
   Regarding engineering parts changes in our engineering department, refer to Sony service bulletins and service manual supplements.

3. Printed Components in Bold-Face type on the exploded views and electrical spare parts list are normally stocked for replacement purposes. The remaining parts are not normally required for routine service work. Orders for parts not shown in Bold-Face type will be processed, but allow for additional delivery time.

5-6. TO OPERATE THE MACHINE WITHOUT INSTALLING CASSETTE TAPE

The following procedures are described without installing the cassette-up compartment.

1. Threading
Turn power on.
The threading ring rotates in the counterclockwise direction automatically, and set is put into the threading completion mode.

2. PLAY
Press PLAY button after the set is put into the threading completion mode. Then set is put into PLAY mode.

3. Unthreading
Press EJECT button. The threading ring rotates in the clockwise direction. Turn off power quickly after the set is put into the unthreading completion mode. (If the power does not turn off, the set is put into the threading mode again.)

4. Search
Turn SEARCH dial after the set is put into the threading completion mode.

5. FF and REW
The FF and REW modes cannot be obtained by only pressing the FF or REW button. (Because the tape roller guide on the threading ring does not rotate.)
Then set the S1-6 switch on the SY-91 board to the ON position. Press the FF or REW button. The set is put into the FF or REW mode.
After adjustment, the S1-6 switch must be set to OFF position.

5-7. MAINTENANCE OF KY OR DE BOARD

When perform the maintenance of the KY board or DE board, it is recommended to remove the function control panel block from the set.
The function control panel removal procedures are as follows;

1. Loosen the function control panel stopper on the right and left side panels. Open the function control panel.
2. Remove the two fixing screws as shown in figure and move the panel in the direction shown by the arrows.

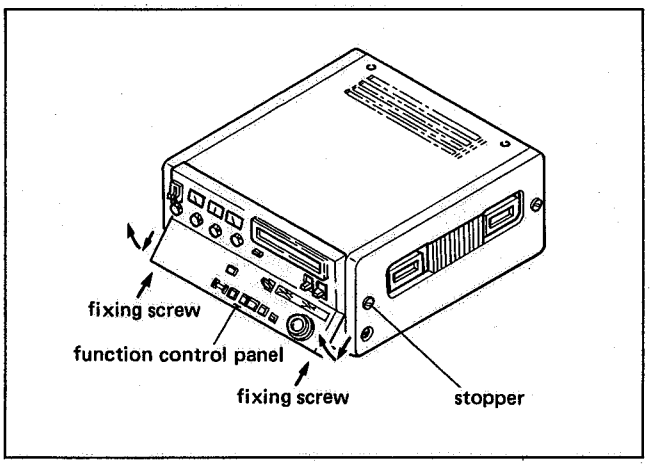

5-8. CASSETTE REMOVAL PROCEDURE WHEN THE TAPE IS SLACKEN IN THE MACHINE

When the tape is slacken in the machine, remove the cassette tape as the following procedures;

1. Turn power off.
2. Turn the pulley of the gear box block until the pinch roller comes in front of the audio head while pushing the ring arm in the direction of the arrow.
3. Remove the tape that is remaining on the threading ring from the tape guides carefully so that it does not damage.
4. Remove the cassette-up compartment stay.
5. Disconnect the connector, CN801 of the cassette-up compartment.
6. Bring up the cassette-up compartment with cassette tape in it slowly so that the tape does not damage.
7. Wind the tape into the cassette tape by turning the reel hub on the back of the cassette tape with finger.
8. Turn the worm gear of the cassette-up compartment by hand in order to place the cassette-up compartment into the up state. Remove the cassette tape.
9. Locate the cause of the trouble and remedy the problem.

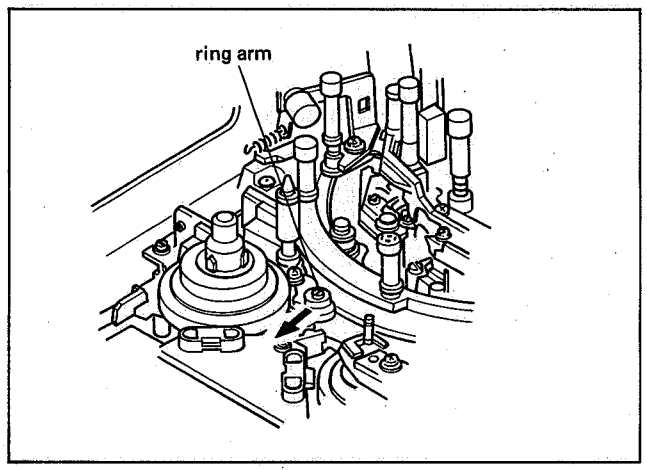

5-7. MAINTENANCE OF KY OR DE BOARD

When perform the maintenance of the KY board or DE board, it is recommended to remove the function control panel block from the set.

The function control panel removal procedures are as follows:

1. Loosen the function control panel stopper on the right and left side panels. Open the function control panel.
2. Remove the two fixing screws as shown in figure and move the panel in the direction shown by the arrows.

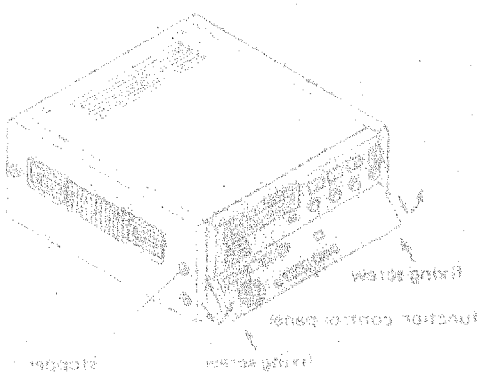

5-8. CASSETTE REMOVAL PROCEDURE WHEN THE TAPE IS SLACKEN IN THE MACHINE

When the tape is slacken in the machine, remove the cassette tape as the following procedures.

1. Turn power off.
2. Turn the pulley of the gear box block until the pinch roller comes in front of the audio head while pushing the ring arm in the direction of the arrow.
3. Remove the tape that is remaining on the threading ring from the tape guides carefully so that it does not damage.
4. Remove the cassette-up compartment stay.
5. Disconnect the connector "NR0" of the cassette-up compartment.
6. Bring up the cassette-up compartment with cassette tape in it slowly so that the tape does not damage.
7. Wind the tape into the cassette tape by turning to the left on the back of the cassette tape with finger.
8. Turn the worm gear of the cassette-up compartment by hand in order to place the cassette-up compartment into the up start. Remove the cassette tape.
9. Locate the cause of the trouble and remedy the problem.

SECTION 17
SEMICONDUCTOR ELECTRODES

Type	Page
IC	
AFL25F15000G1	17-4
AM26LS31PC	17-4
AM26LS32PC	17-4
BX1056	17-4
BX1098	17-4
BX1099	17-4
BX1101	17-4
BX1140	17-4
BX1152	17-4
BX1154	17-5
BX1155	17-5
BX342	17-5
BX343	17-5
BX365A	17-5
BX366A	17-5
BX381	17-5
BX388	17-5
BX389	17-5
BX3915A	17-5
CA3054	17-6
CX130	17-6
CX134A	17-6
CX170	17-6
CX20051	17-6
CX20051A	17-6
CX20052	17-6
CX773A	17-7, 17-8
CX7903	17-8
CX7912	17-9, 17-10
CX894	17-10
HA1-4905	17-10
HD10105	17-10
HD10116	17-10
HD10124	17-10
HD10125	17-10
HD10131	17-11
HD14011BP	17-11
HD14069UBP	17-11
HD14538BP	17-11
HI1-201	17-11
HM6116LP-2	17-11
LH0080	17-12
LH0082	17-12
LH0084	17-13

Type	Page
LM358P	17-13
M54517P	17-13
M54523P	17-13
M54529P	17-13
M54532P	17-13
M54543L	17-14
MB84001B	17-14
MB84011B	17-11
MB84013B	17-14
MB84049UB	17-14
MB84051B	17-14
MB84053B	17-14
MB84069UB	17-11
MB84070B	17-14
MB84081B	17-14
MBM2149L-55	17-15
MBM2732A-35Z	17-15
MC10113L	17-15
MC10124L	17-10
MC10125L	17-10
MC10198L	17-15
MC14011BCP	17-11
MSM2128-1AS	17-15
MSM2128-12RS	17-15
MSM2128-15RS	17-15
MSM4022RS	17-16
MSM4094RS	17-16
MSM5128-12RS	17-11
NJM2043D	17-16
NJM2903D	17-16
NJM4558D	17-16
NJM4560D	17-16
NJM4562D	17-16
NJM78L**A	17-17
NJM78M**A	17-17
SN7400N	17-17
SN7404N	17-17
SN7406N	17-17
SN7408N	17-17
SN74191N	17-17
SN74265N	17-17
SN74273N	17-18
SN74365AN	17-18
SN74LS00N	17-17
SN74LS02N	17-18
SN74LS04N	17-17
SN74LS05N	17-18
SN74LS08N	17-17

SEMICONDUCTOR ELECTRODES

Type	Page
SN74LS10N	17-18
SN74LS11N	17-18
SN74LS112AN	17-18
SN74LS113AN	17-18
SN74LS123N	17-19
SN74LS151N	17-19
SN74LS157N	17-19
SN74LS161AN	17-19
SN74LS163AN	17-19
SN74LS164N	17-20
SN74LS166AN	17-20
SN74LS174N	17-20
SN74LS175N	17-20
SN74LS191N	17-17
SN74LS20N	17-20
SN74LS221N	17-20
SN74LS273N	17-18
SN74LS30N	17-20
SN74LS32N	17-20
SN74LS374N	17-21
SN74LS37N	17-21
SN74LS393N	17-21
SN74LS423N	17-21
SN74LS74AN	17-21
SN74LS85N	17-21
SN74S163N	17-19
SN74S32N	17-20
SN74S51N	17-22
SN75107AN	17-22
SN75110AN	17-22
SN75207BN	17-22
SN75452BP	17-22
SN75454BP	17-22
TA7060AP	17-22
TA78L***AP	17-22
TC4001BP	17-14
TC4011BP	17-11
TC4013BP	17-22
TC4020BP	17-22
TC4021BP	17-23
TC4022BP	17-16
TC4024BP	17-23
TC4030BP	17-23
TC4049BP	17-14
TC4050BP	17-23
TC4051BP	17-14
TC4053BP	17-14
TC4066BP	17-23
TC4069UBP	17-11
TC4071BP	17-23
TC4073BP	17-23
TC4075BP	17-23
TC4081BP	17-14

Type	Page
TC4093BP	17-24
TC40H004P	17-24
TC40H011P	17-24
TC40H032P	17-24
TC40H042P	17-24
TC40H074P	17-24
TC40H138P	17-24
TC40H139P	17-24
TC40H240P	17-25
TC40H244P	17-25
TC40H245P	17-25
TC40H273P	17-25
TC40H368P	17-25
TC4516BP	17-25
TC4528BP	17-26
TC4532BP	17-26
TC4543BP	17-26
TC5067BP	17-26
TL082CP	17-26
TL084CN	17-26
TL601CP	17-26
TL607CP	17-26
TL8605P	17-27
μA760HC	17-27
μA796HC	17-27
μPC143**H	17-27
μPC319C	17-27
μPC324C	17-27
μPC339C	17-27
μPC358C	17-13
μPC4082C	17-26
μPC4557C	17-27
μPC4558C	17-16
μPC78**H	17-27
μPC78L**A	17-27
μPC79**H	17-28
μPD4069UBC	17-11
μPD4519BC	17-28
μPD4584BC	17-28
μPD5101LC-1	17-28
Transistor	
2SA1005	17-29
2SA1015	17-29
2SA1026	17-29
2SA1027R	17-29
2SA1048	17-29
2SA1115	17-29
2SA1175	17-29

SEMICONDUCTOR ELECTRODES

Type	Page
2SA530H	17-29
2SA733	17-29
2SA772	17-29
2SA773	17-29
2SA844	17-29
2SA925	17-29
2SB507HP	17-29
2SB548	17-29
2SB553	17-29
2SB733	17-29
2SB734	17-29
2SB739	17-29
2SB740	17-29
2SB825	17-29
2SB857	17-29
2SB858	17-29
2SC1275	17-29
2SC1310	17-29
2SC1363	17-29
2SC1364	17-29
2SC1474	17-29
2SC1475	17-29
2SC1636	17-29
2SC1815	17-29
2SC1983	17-29
2SC2458	17-29
2SC2603	17-29
2SC2724	17-29
2SC2771	17-29
2SC2785	17-29
2SC2901	17-29
2SC403C	17-29
2SC403SP	17-29
2SC689H	17-29
2SC945	17-29
2SD1134	17-29
2SD313HP	17-29
2SD414	17-29
2SD553	17-29
2SD774	17-29
2SD789	17-29
2SD795	17-29
2SD880	17-29
2SD882	17-29
2SK240-BL	17-29
2SK43	17-29
TPS601-B	17-29
JC501	17-29

Type	Page
Diode	
GL5-HD5	17-29
LN25RP	17-29
LN35BP	17-29
SE301A	17-29
TLO124	17-29
TLR321	17-29
Others	
DM-208	17-29
DM-211	17-29
PS4005-L	17-29

SEMICONDUCTOR ELECTRODES

AFL25F15000G1 (MURATA)
ACTIVE LOW-PASS FILTER
— IMPRINTED SIDE VIEW —

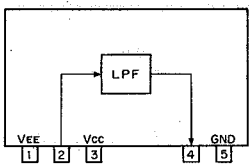

AM26LS31PC (ADVANCED MICRO DEVICE)
HIGH SPEED DIFFERENTIAL LINE DRIVER
— TOP VIEW —

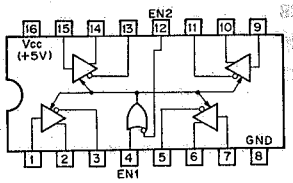

FUNCTION TABLE

EN2	EN1	OUTPUT
0	0	ENABLE
0	1	ENABLE
1	0	HI-Z
1	1	ENABLE

AM26LS32PC (ADVANCED MICRO DEVICE)
HIGH SPEED DIFFERENTIAL LINE RECEIVER
— TOP VIEW —

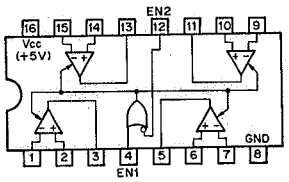

FUNCTION TABLE

EN2	EN1	OUTPUT
0	0	ENABLE
0	1	ENABLE
1	0	HI-Z
1	1	ENABLE

0; LOW LEVEL
1; HIGH LEVEL
HI-Z; HIGH IMPEDANCE

	SENSE	INPUT VOLT
LS32	±200mV	±7V
LS33	±500mV	±15V

BX1056 (SONY)
CHROMA FREQUENCY CONVERTER
— REAR VIEW —

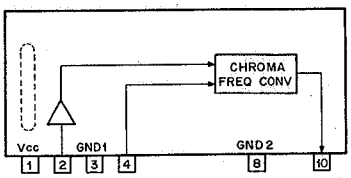

BX1098 (SONY)
RF METER DRIVER
— REAR VIEW —

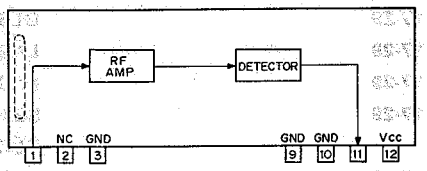

BX1099 (SONY)
ACTIVE EQUALIZER
— REAR VIEW —

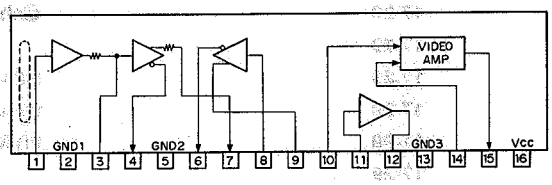

BX1101 (SONY)
LIMITER / DEMODULATOR
— REAR VIEW —

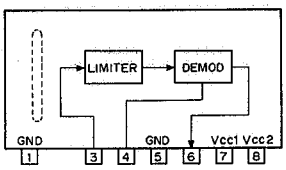

BX1140 (SONY)
HF AMP
— REAR VIEW —

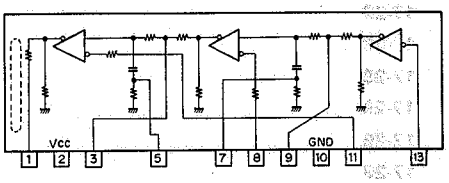

BX1152 (SONY)
DOLBY (C TYPE) NOISE REDUCTION SYSTEM
— REAR VIEW —

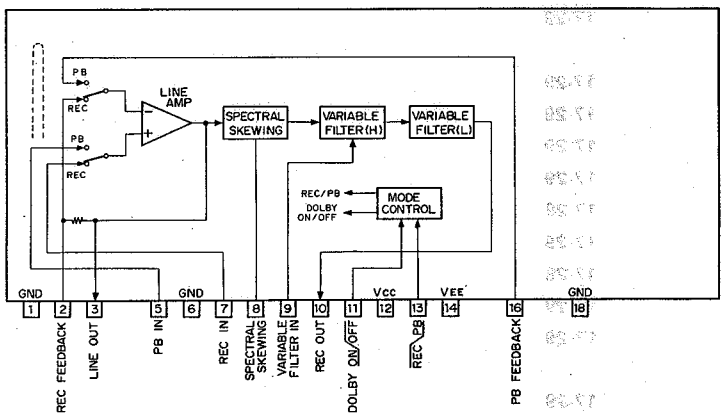

BX1154 (SONY)
DRUM PWM
– REAR VIEW –

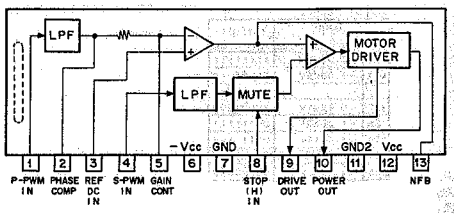

BX1155 (SONY)
CAPSTAN PWM
– REAR VIEW –

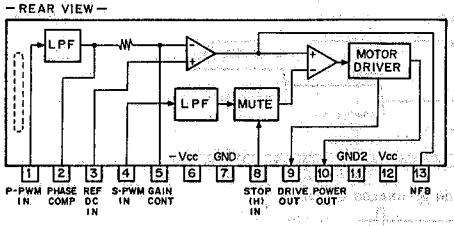

BX342 (SONY)
AMPLIFIER/DETECTOR
—REAR VIEW—

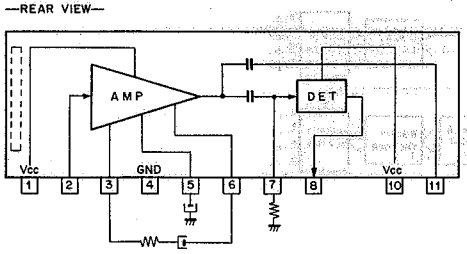

BX343 (SONY)
OSCILLATOR/DETECTOR
—REAR VIEW—

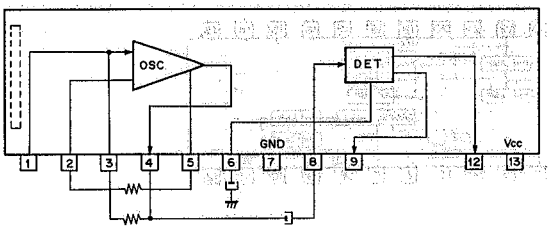

BX365A(SONY)
VIDEO AMPLIFIER
– SIDE VIEW –

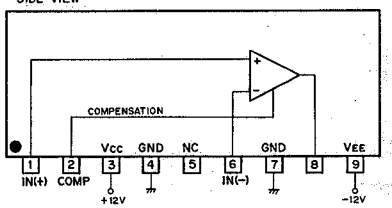

BX366A (SONY)
VIDEO BUFFER
—SIDE VIEW—

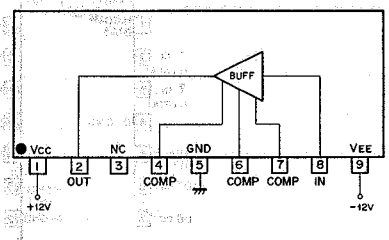

BX381 (SONY)
PHASE COMPARATOR
– SIDE VIEW –

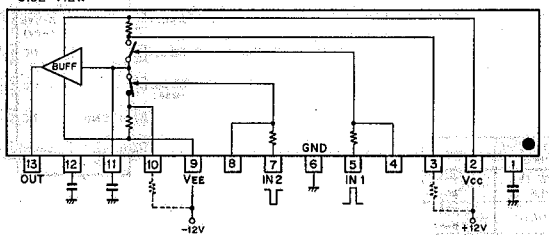

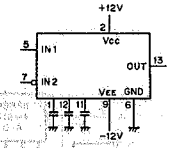

BX388 (SONY)
VIDEO AMP/ VD MIXER
—IMPRINTED SIDE—

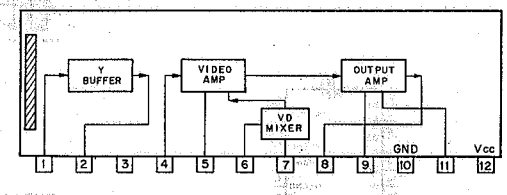

BX389 (SONY)
VIDEO AMPLIFIER
— IMPRINTED SIDE —

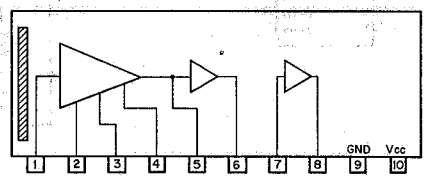

BX3915A (SONY)
SYNC SEPARATOR
—IMPRINTED SIDE—

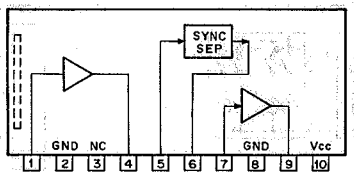

SEMICONDUCTOR ELECTRODES

CA3054 (RCA)
DIFFERENTIAL AMPLIFIER
—TOP VIEW—

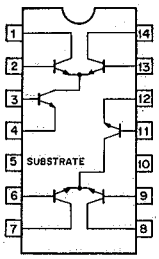

CX20052 (SONY)
8-BIT FEED-FORWARD TYPE A/D CONVERTER (ECL OUTPUT)
—TOP VIEW—

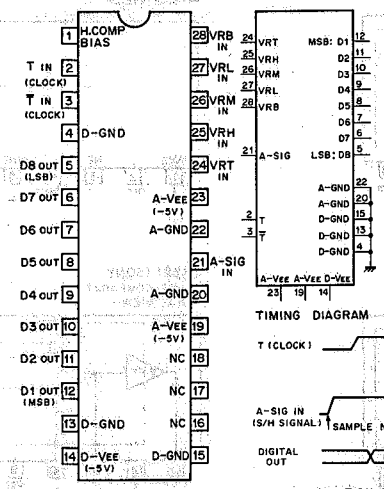

OUTPUT CODING

STEP	RANGE EX. 2.000V FULL SCALE	OUTPUTS MSB LSB
000	0.0000V	11111111
001	-0.0078V	11111110
⋮	⋮	⋮
127	-0.9961V	10000000
128	-1.0039V	01111111
129	-1.0118V	01111110
⋮	⋮	⋮
255	-2.0000V	00000000

TIMING DIAGRAM

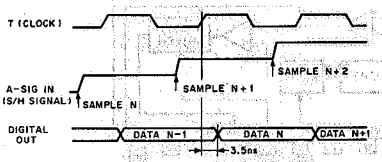

TIMING CONDITION OF ANALOG SIGNAL

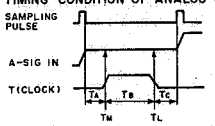

$T_A > 2ns$
$T_B > 20ns$
$T_C > 2ns$
T_M : UPPER 4-BIT A/D ACTION TIMING
T_L : LOWER 4-BIT A/D ACTION TIMING

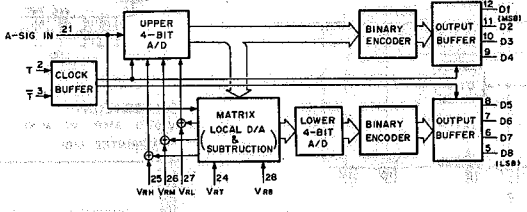

CX130 (SONY)
ANALOG SWITCH
—TOP VIEW—

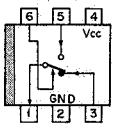

CONT. INPUT (PIN6)	SW
LOW OR OPEN	
HIGH	

CX20051 (SONY)
CX20051A (SONY)
10-BIT D/A CONVERTER (ECL INPUT)
—TOP VIEW—

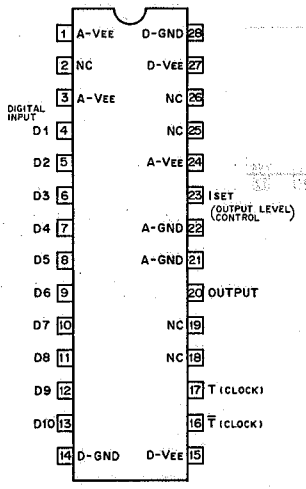

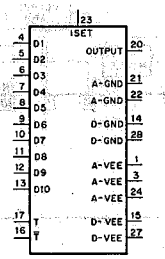

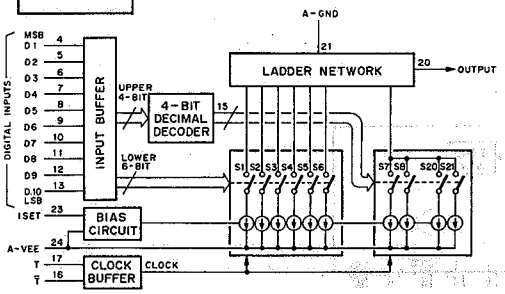

CX134A (SONY)
—TOP VIEW—

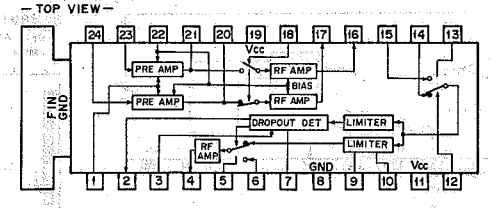

CX170 (SONY)
AUDIO POWER AMP
—TOP VIEW—

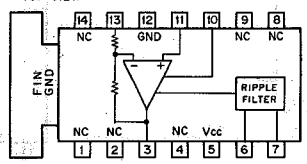

 SEMICONDUCTOR ELECTRODES

CX773A (SONY)
C-MOS SYNC GENERATOR (NTSC, PAL-M, PAL, SECAM)
—TOP VIEW—

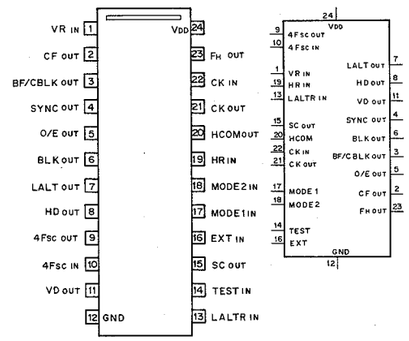

O/E : ODD/EVEN FIELD
CF : COLOUR FRAME PULSE
HCOM : H COMPARATOR

SYSTEM	4Fsc	CLOCK
NTSC	910 FH	910FH
PAL	1135FH+2Fv	908FH
PALM	909FH	910FH
SECAM	———	908FH

INTUPS MODE 1	INTUPS MODE 2	SYSTEM
0	0	NTSC
0	1	SECAM
1	0	PALM
1	1	PAL

"1" : VDD
"0" : GND

INTUPS EXT	INTUPS TEST	FUNCTION
0	0	INTERNAL
0	1	INVALID
1	0	EXT
1	1	TEST

TEST "0": OPEN (INTERNALLY (PULLED DOWN))

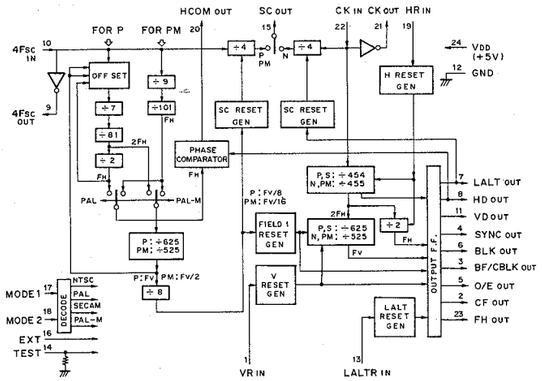

NTSC, PAL-M (FIELD 1,3)

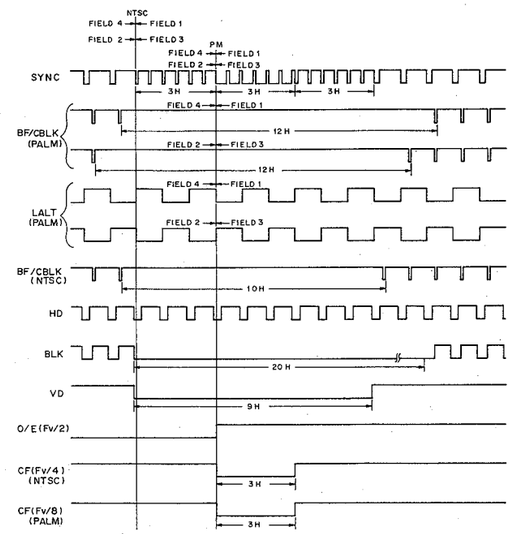

NTSC, PAL-M (FIELD 2,4)

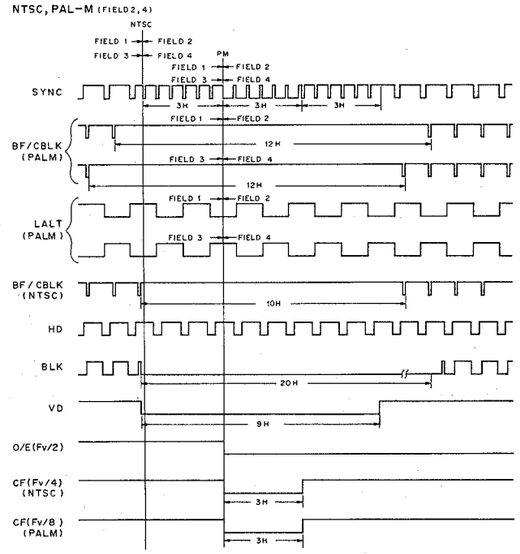

PAL, SECAM (FIELD 4,2)

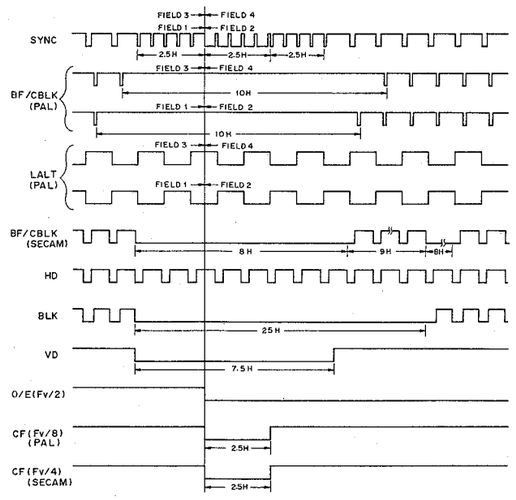

PAL, SECAM (FIELD 1,3)

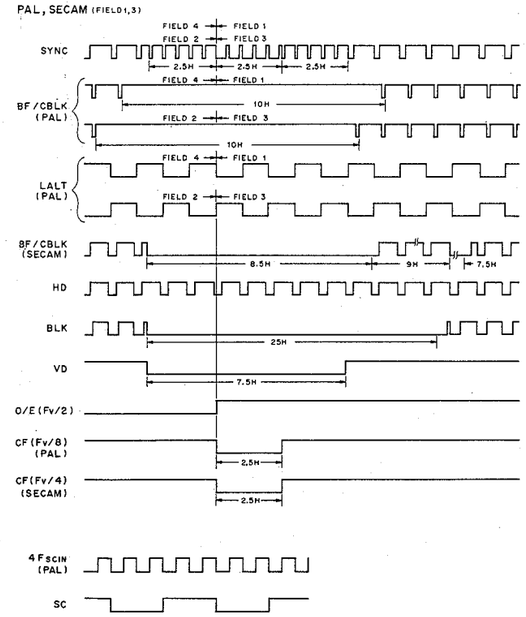

P:PAL, SECAM
N:NTSC, PALM

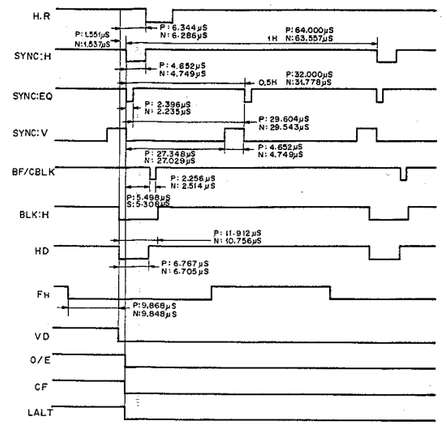

CX7903 (SONY)
CMOS GENLOCK DRIVER FOR CX773A
— TOP VIEW —

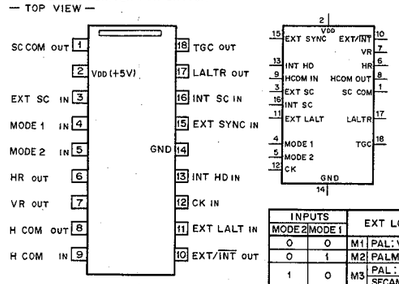

INPUTS MODE 2	INPUTS MODE 1		EXT LOCK MODE
0	0	M1	PAL: VBS
0	1	M2	PALM: VBS
1	0	M3	PAL: VS/SC/LALT SECAM: VS/SC/LALT
1	1	M4	NTSC: VBS NTSC: VS/SC PALM: VS/SC/LALT

0 ; LOW LEVEL
1 ; HIGH LEVEL

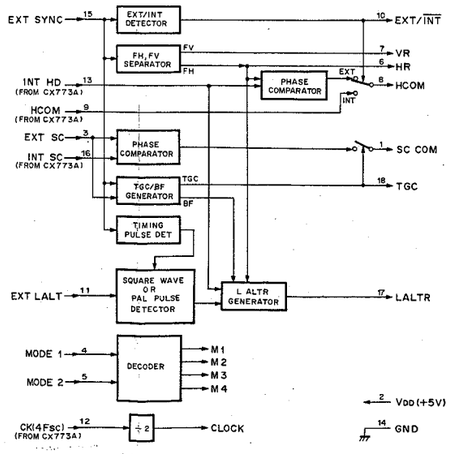

SEMICONDUCTOR ELECTRODES

CX7912 (SONY)
C-MOS TIME CODE READER
— TOP VIEW —

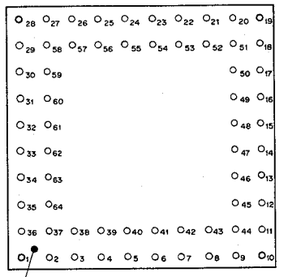

PIN NO.	IN	OUT	SYMBOL	PIN NO.	IN	OUT	SYMBOL	PIN NO.	IN	OUT	SYMBOL	PIN NO.	IN	OUT	SYMBOL
1	○		S1	17		○	AD 4	33	○		SLCT	49		○	AD 3
2	○		RST	18		○	RDSY	34	○		OUDS	50		○	BSRU
3		○	DER	19		○	CK 0	35	○		S4	51		○	TCT
4		○	BER	20	○		CK IN	36	○		S2	52	○		SCKI
5		○	FWRE	21		○	SCKO	37	○		TSG 1	53		○	TMO
6	○		DCS	22	○		DMSS	38	○		TSG 2	54			GND
7		○	WR	23	○		PN	39	○		TSG 3	55	○		PN
8	○		ACS	24		○	PND	40			GND	56		○	HT 8
9		○	D0	25		○	HT 4	41		○	H 4 0	57		○	MT 8
10		○	CFS A	26		○	ST 8	42		○	H 8 0	58		○	FT 8
11		○	CFS B	27		○	FT 4	43		○	H 16 0	59		○	DCLK
12		○	CFS C	28		○	DATA	44		○	D1	60		○	CAL
13		○	CFS D	29	○		FRE	45		○	D2	61	○		Vdd(+5V)
14		○	FLD	30	○		CTL IN	46		○	D3	62	○		SLTC
15		○	AD 0	31	○		TC IN	47	○		Vdd(+5V)	63	○		TPN
16		○	AD 2	32		○	OVF	48		○	AD 1	64	○		TEST

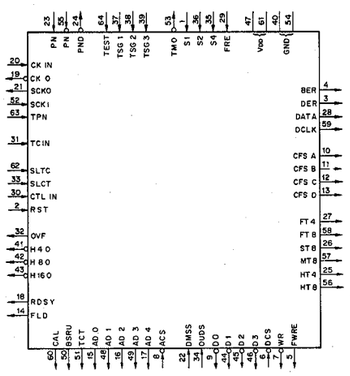

MODE SELECT

SLCT	SLTC	MODE
0	0	AUTO
0	1	TIME CODE
1	0	CTL
1	1	AUTO

CTL COUNT

FRE	RST	COUNT
0	X	DOWN COUNT
↑	X	UP COUNT
X	↑	RESET

SIGNAL FORMAT SELECT

S4	S2	S1	FORMAT	FRAME
0	0	0	FILM	24
0	0	1	——	—
0	1	0	——	—
0	1	1	——	—
1	0	0	EBU (PAL, SECAM)	25
1	0	1	——	—
1	1	0	NTSC (NON DROP FRAME)	30
1	1	1	NTSC (DROP FRAME)	30

0 ; LOW LEVEL
1 ; HIGH LEVEL
X ; DON'T CARE

FUNCTIONAL PIN DEFINITION

Pin No.	SYMBOL	DESCRIPTION
8	$\overline{ACS}$	ADDRESS LINE CHIP SELECT IN
15	AD0	ADDRESS DATA OUT
48	AD1	
16	AD2	
49	AD3	
17	AD4	
4	BER	BIT ERROR OUT
50	BSRU	DATA BUS OUTPUT STATE OUT
60	CAL	CALCULATE STATE OUT
10	CFSA	DEMODULATED COLOR FRAME OUT
11	CFSB	
12	CFSC	
13	CFSD	
20	CKIN	CLOCK IN
19	$\overline{CKO}$	CLOCK OUT
30	CTLIN	CTL IN (⎍)
28	DATA	DEMODULATED DATA OUT
59	DCLK	DEMODULATED CLOCK OUT
6	$\overline{DCS}$	DATA LINE CHIP SELECT IN
3	DER	DATA ERROR OUT
22	DMSS	DATA MIX AND SEPARATOR SELECT IN
9	$\overline{D0}$	DATA OUT
44	$\overline{D1}$	
45	$\overline{D2}$	
46	$\overline{D3}$	
14	FLD	FIELD DATA OUT
29	FRE	CTL FLAG IN
27	FT4	SIX ADDRESS BIT OUT
58	FT8	
5	FWRE	DATA INC/DEC OUT
41	$\overline{H40}$	COUNT OVER
42	$\overline{H80}$	
43	$\overline{H160}$	
25	HT4	SIX ADDRESS BIT OUT
56	HT8	
57	MT8	
34	OUDS	ERROR BYPASS SELECT IN
32	OVF	COUNT OVER
23	PN	POWER ON RESET IN
55	$\overline{PN}$	POWER ON RESET IN
24	$\overline{PND}$	POWER ON RESET OUT
18	RDSY	SYNC WORD OUT
2	RST	CTL RESET IN (⎍)
1	S1	SIGNAL FORMAT SELECT IN
36	S2	
35	S4	
52	SCKI	SYSTEM CLOCK IN
21	SCKO	SYSTEM CLOCK OUT
33	SLCT	CTL SELECT IN
62	SLTC	TIME CODE SELECT IN
26	ST8	SIX ADDRESS BIT OUT
31	TCIN	TIME CODE IN
51	TCT	DATA OUTPUT SELECT OUT
64	TEST	TEST IN (CONNECT WITH GND)
53	$\overline{TMO}$	TIME OVER OUT
63	TPN	CLOCK ENABLE
37	TSG1	TEST IN (CONNECT WITH GND)
38	TSG2	
39	TSG3	
47	VDD	DC +5V SUPPLY
61	VDD	
40	GND	GROUND REFERENCE
54	GND	
7	$\overline{WR}$	WRITE OUT

TIMING CHART

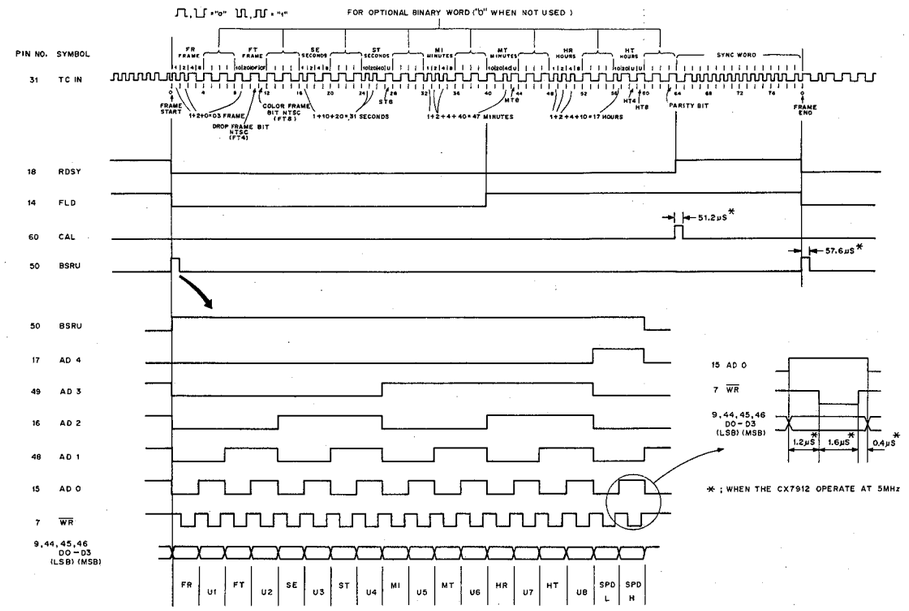

CX894 (SONY)
3 INPUT SWITCH
— SIDE VIEW —

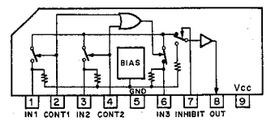

HA1-4905 (HARRIS)
VOLTAGE COMPARATOR
— TOP VIEW —

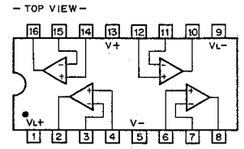

NOTE: V+ AND V− DETERMINE THE ALLOWABLE INPUT SIGNAL RANGE

VL+ AND VL− DETERMINE THE OUTPUT SWING

HD10105 (HITACHI)
ECL 2-3-2-INPUT OR/NOR GATE

—TOP VIEW—

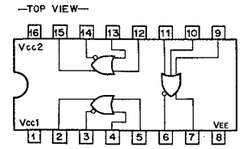

HD10116 (HITACHI)
ECL DIFFERENTIAL OR/NOR LINE RECEIVER

-TOP VIEW-

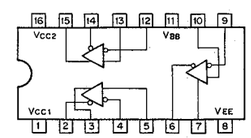

MC10124L (MOTOROLA)
HD10124 (HITACHI)
ECL TTL-TO-ECL TRANSLATOR

—TOP VIEW—

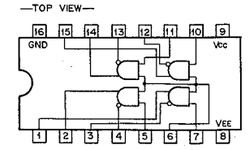

MC10125L (MOTOROLA)
HD10125 (HITACHI)
ECL ECL-TO-TTL TRANSLATOR

—TOP VIEW—

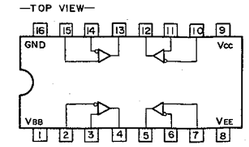

HD14538BP (HITACHI)
C-MOS DUAL RETRIGGERABLE/NON-RETRIGGERABLE MONOSTABLE MULTIVIBRATOR
-TOP VIEW-

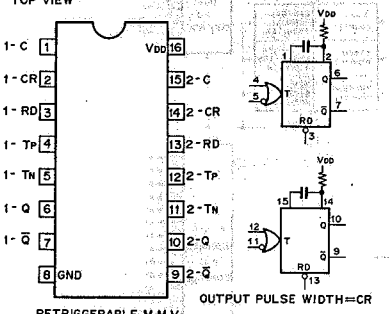

RETRIGGERABLE M.M.V

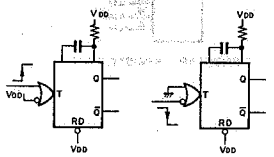

NON-RETRIGGERABLE M.M.V

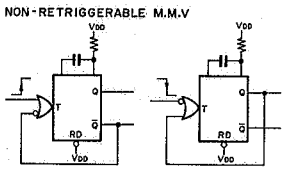

HD14069UBP (HITACHI)
MB84069UB (FUJITSU)
TC4069UBP (TOSHIBA)
μPD4069UBC (NEC)
C-MOS INVERTER
—TOP VIEW—

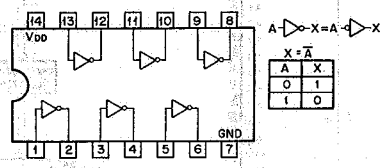

A	X
0	1
1	0

HI1-201 (HARRIS)
C-MOS ANALOG SWITCH
—TOP VIEW—

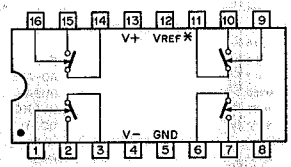

CONT IN	SW
0	
1	

0 ; LOW LEVEL
1 ; HIGH LEVEL

* NOTE

INTERFACE	VREF CONNECTION
TTL	OPEN
C-MOS	VDD ≦ 5.5V ; OPEN
	VDD > 5.5V ; TO VDD

HD10131 (HITACHI)
ECL D-TYPE FLIP FLOP
—TOP VIEW—

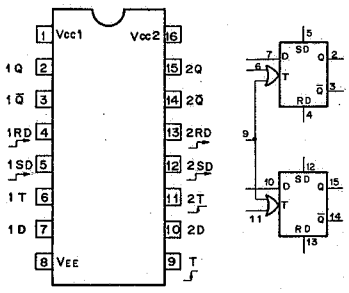

INPUTS				OUTPUTS	
SD	RD	T	D	Q_{n+1}	$\overline{Q_{n+1}}$
1	0	X	X	1	0
0	1	X	X	0	1
1	1	X	X	ND	ND
0	0	↑	1	1	0
0	0	↑	0	0	1
0	0	0	X	Q_n	$\overline{Q_n}$

0 ; LOW LEVEL
1 ; HIGH LEVEL
X ; DON'T CARE
ND ; NOT DEFINED

HM6116LP-2 (HITACHI) (ACCESS TIME = 120 nS)
MSM5128-12RS (OKI) (ACCESS TIME = 120 nS)
C-MOS 16384(2048x8)-BIT HIGH SPEED STATIC RAM
-TOP VIEW-

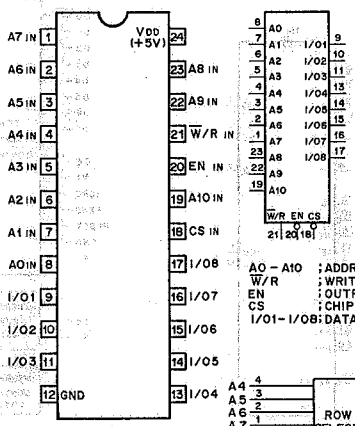

INPUTS			FUNCTION
CS	W/R	EN	
0	0	X	WRITE
0	1	0	READ
0	1	1	DISABLE (OUTPUT=HI-Z)
1	X	X	DISABLE (OUTPUT=HI-Z)

0 ; LOW LEVEL
1 ; HIGH LEVEL
X ; DON'T CARE
HI-Z ; HIGH IMPEDANCE

A0 - A10 ; ADDRESS INPUTS
W/R ; WRITE / READ ENABLE
EN ; OUTPUT ENABLE
CS ; CHIP SELECT
I/O1 - I/O8 ; DATA INPUTS / OUTPUTS

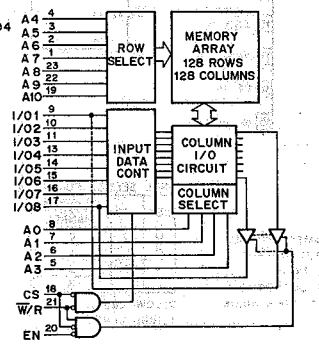

HD14011BP (HITACHI)
MB84011B (FUJITSU)
MC14011BCP (MOTOROLA)
TC4011BP (TOSHIBA)
C-MOS 2-INPUT NAND GATE
-TOP VIEW-

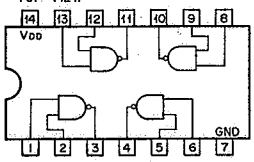

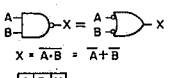

$X = \overline{A \cdot B} = \overline{A} + \overline{B}$

A	B	X
0	0	1
0	1	1
1	0	1
1	1	0

LH0080 (SHARP)
N-MOS 8-BIT MICROPROCESSOR
— TOP VIEW —

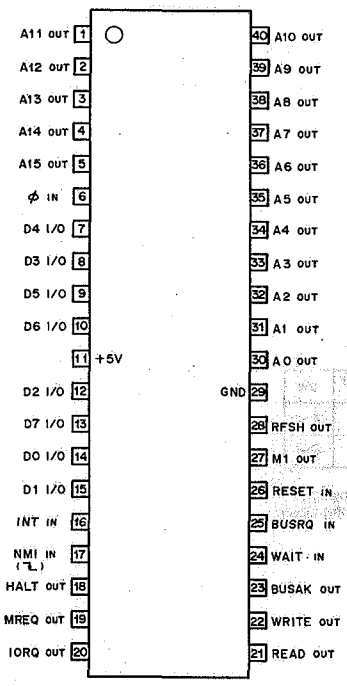

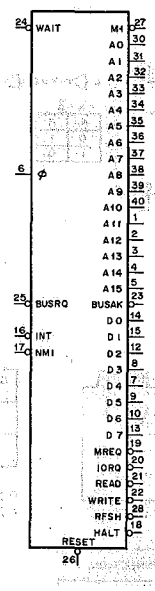

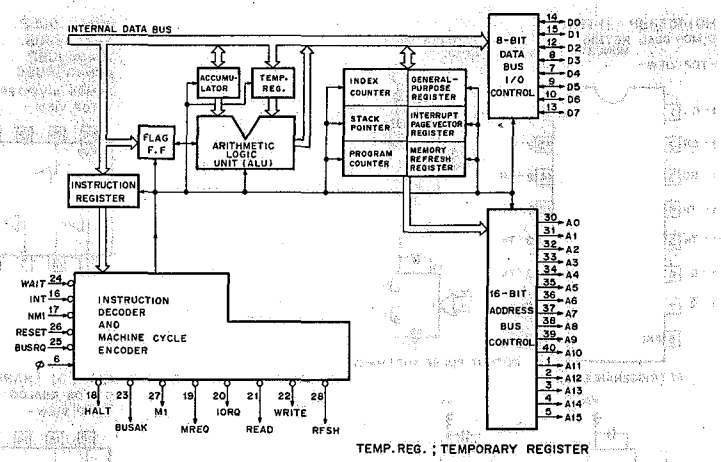

TEMP.REG. ; TEMPORARY REGISTER

φ ; CLOCK
A0-A15 ; 3-STATE ADDRESS OUTPUT
BUSAK ; BUS ACKNOWLEDGE
BUSRQ ; BUS REQUEST
D0-D7 ; 3-STATE DATA INPUT/OUTPUT
HALT ; HALT STATE
INT ; INTERRUPT REQUEST
IORQ ; 3-STATE I/O REQUEST
M1 ; MACHINE CYCLE 1
MREQ ; 3-STATE MEMORY REQUEST
NMI ; NON-MASKABLE INTERRUPT (DOWN EDGE TRIGGER)
READ ; 3-STATE MEMORY READ
RFSH ; REFRESH
WRITE ; 3-STATE MEMORY WRITE

LH0082 (SHARP)
N-MOS COUNTER TIMER CIRCUIT
— TOP VIEW —

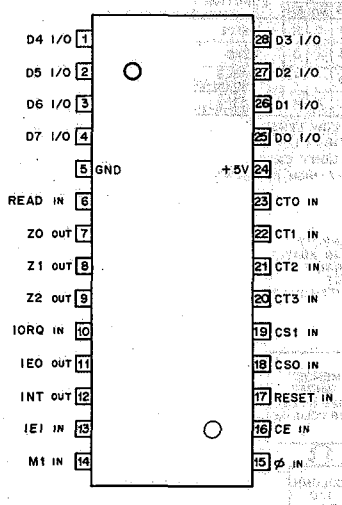

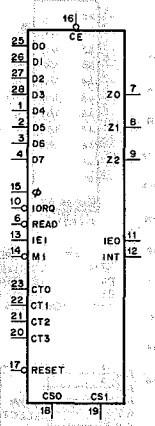

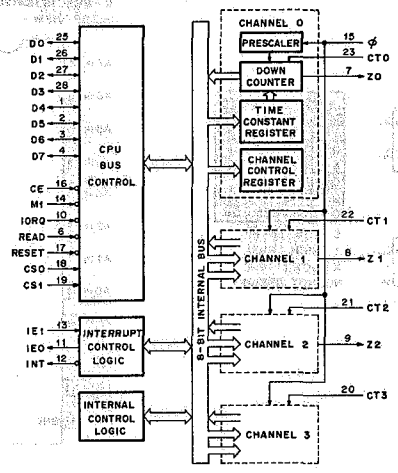

φ ; SYSTEM CLOCK
CE ; CHIP ENABLE
CS0,CS1 ; CHANNEL SELECT
CT0-CT3 ; EXTERNAL CLOCK/TIMER TRIGGER
D0-D7 ; 3-STATE DATA INPUT/OUTPUT
IEI ; INTERRUPT ENABLE INPUT
IEO ; INTERRUPT ENABLE OUTPUT
INT ; INTERRUPT REQUEST (OPEN DRAIN)
IORQ ; I/O REQUEST
M1 ; MACHINE CYCLE 1
READ ; READ CYCLE STATUS
Z0-Z2 ; ZERO COUNT/TIME OUT

CHANNEL SELECT FUNCTION

CS1	CS0	SELECTED CHANNEL
0	0	0
0	1	1
1	0	2
1	1	3

0;LOW LEVEL
1;HIGH LEVEL

LH0084 (SHARP)
N-MOS 2-CHANNEL SERIAL INPUT/OUTPUT FOR MICROCOMPUTER SYSTEM
— TOP VIEW—

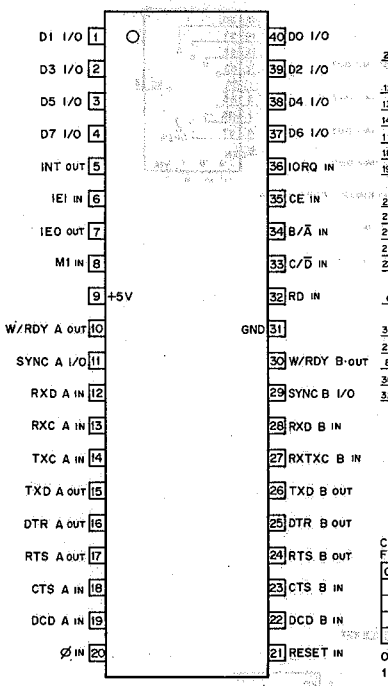

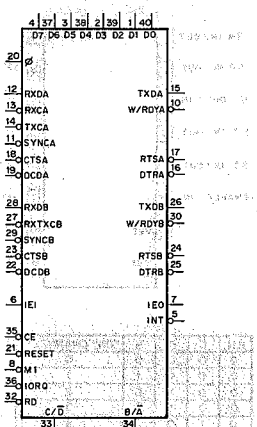

CHANNEL SELECT FUNCTION TABLE

C/D̄	B/Ā	FUNCTION
0	0	CH-A DATA
0	1	CH-B DATA
1	0	CH-A CONT. WORD
1	1	CH-B CONT. WORD

0;LOW LEVEL
1;HIGH LEVEL

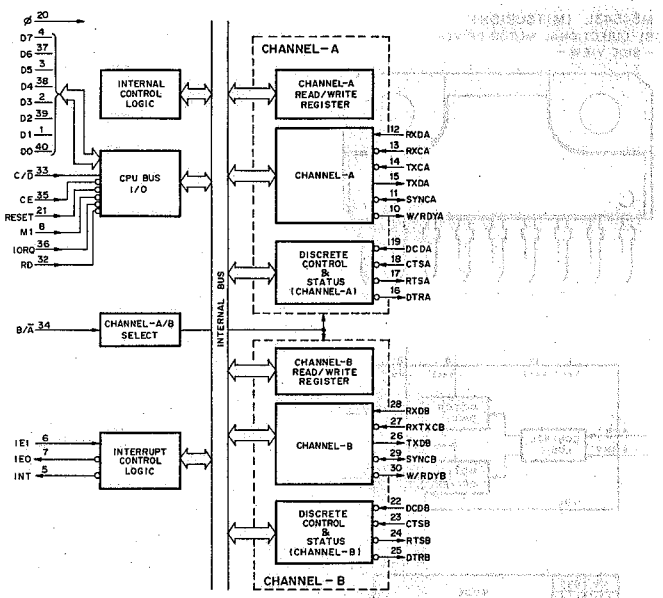

Ø	; SYSTEM CLOCK IN	RXD	; RECEIVE DATA IN
D7-D0	; DATA I/O	RXC	; RECEIVE CLOCK IN
C/D̄	; CONTROL/DATA SELECT IN	TXC	; TRANSMIT CLOCK IN
CE	; CHIP ENABLE IN	TXD	; TRANSMIT DATA OUT
M1	; MACHINE CYCLE 1 IN	SYNC	; EXTERNAL CHARACTER SYNCHRONIZATION I/O
IORQ	; I/O REQUEST IN	W/RDY	; WAIT/READY OUT
RD	; READ IN	DCD	; DATA CARRIER DETECT IN
B/Ā	; CHANNEL B/A SELECT IN	CTS	; CLEAR TO SEND IN
IEI	; INTERRUPT ENABLE IN	RTS	; REQUEST TO SEND OUT
IEO	; INTERRUPT ENABLE OUT	DTR	; DATA TERMINAL READY OUT
INT	; INTERRUPT OUT		

LM358P (TI)
μPC358C (NEC)
DUAL OPERATIONAL AMPLIFIERS

—TOP VIEW—

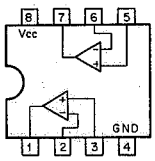

M54517P (MITSUBISHI)
TRANSISTOR ARRAY
— TOP VIEW —

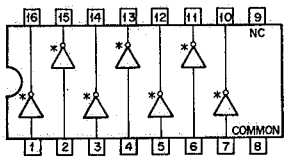

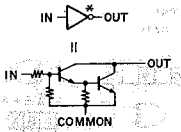

M54523P (MITSUBISHI)
BIPOLAR TRANSISTOR ARRAY WITH OPEN COLLECTOR
—TOP VIEW—

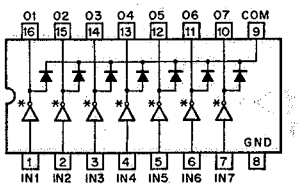

COM : COMMON

M54529P (MITSUBISHI)
TRANSISTOR ARRAY
— TOP VIEW—

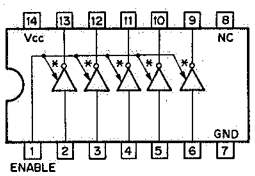

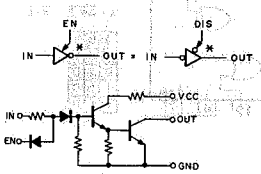

IN	EN	OUT
0	1	1
1	1	0
X	0	OPEN

M54532P (MITSUBISHI)
DARLINGTON TRANSISTOR ARRAY WITH CLAMP DIODE
— TOP VIEW—

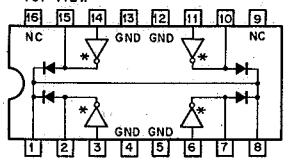

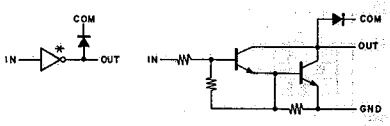

SEMICONDUCTOR ELECTRODES

M54543L (MITSUBISHI)
BI-DIRECTIONAL MOTOR DRIVER
—SIDE VIEW—

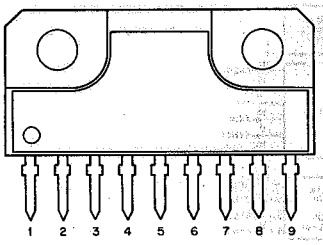

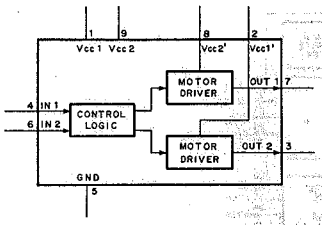

IN		OUT		MODE
1	2	1	2	
0	0	Z	Z	NO OPERATION
1	0	1	0	ROTATION
0	1	0	1	REVERSE ROTATION
1	1	0	0	BRAKE

0 : LOW LEVEL
1 : HIGH LEVEL
Z : HIGH IMPEDANCE

MB84001B (FUJITSU)
TC4001BP (TOSHIBA)
C-MOS 2-INPUT NOR GATE
—TOP VIEW—

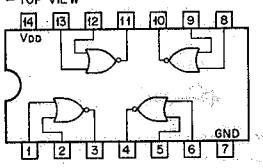

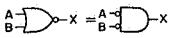

$X = \overline{A+B} = \overline{A} \cdot \overline{B}$

A	B	X
0	0	1
0	1	0
1	0	0
1	1	0

MB84013B (FUJITSU)
C-MOS D-TYPE FLIP FLOP WITH DIRECT SET / RESET
—TOP VIEW—

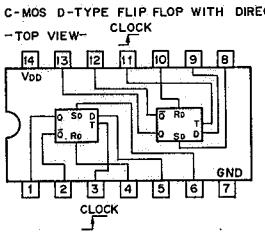

DIRECT R-S FLIP FLOP

Sd	Rd	Q	$\overline{Q}$
0	0	Qn	$\overline{Qn}$
0	1	0	1
1	0	1	0
1	1	1	1

0 : LOW LEVEL
1 : HIGH LEVEL

D-TYPE FLIP FLOP

tn	tn+1
D	Q
0	0
1	1

CLOCK T ; ↓
tn ; BEFORE CLOCK
tn+1 ; AFTER CLOCK

MB84049UB (FUJITSU)
TC4049BP (TOSHIBA)
C-MOS INVERTING TYPE BUFFER / CONVERTER
—TOP VIEW—

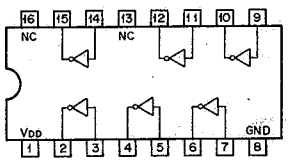

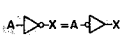

$X = \overline{A}$

A	X
0	1
1	0

MB84051B (FUJITSU)
TC4051BP (TOSHIBA)
C-MOS 8-CHANNEL MULTIPLEXER / DEMULTIPLEXER
—TOP VIEW—

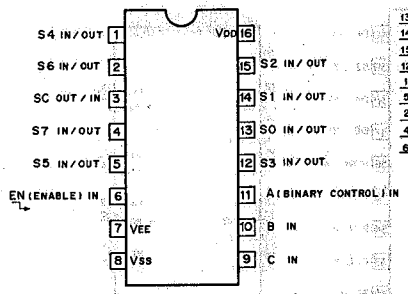

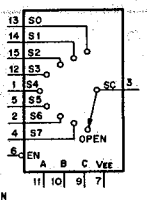

EN	C	B	A	"ON" CHANNEL
0	0	0	0	0
0	0	0	1	1
0	0	1	0	2
0	0	1	1	3
0	1	0	0	4
0	1	0	1	5
0	1	1	0	6
0	1	1	1	7
1	X	X	X	OPEN

X ; DON'T CARE
1 ; HIGH LEVEL
0 ; LOW LEVEL

MB84053B (FUJITSU)
TC4053BP (TOSHIBA)
C-MOS 2-CHANNEL MULTIPLEXER/DEMULTIPLEXER
—TOP VIEW—

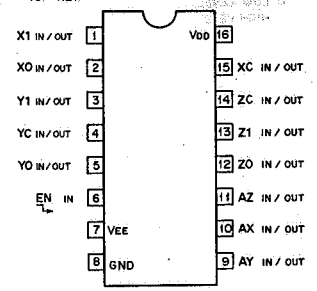

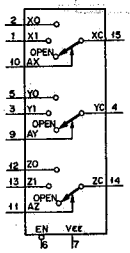

CONT. INPUTS		ON CHANNEL
EN	A (X,Y,Z,)	
0	0	0
0	1	1
1	X	OPEN

MB84070B (FUJITSU)
C-MOS EXCLUSIVE OR GATE
—TOP VIEW—

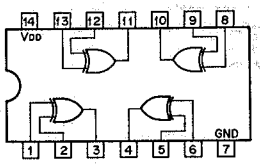

$X = \overline{A} \cdot B + A \cdot \overline{B}$

A	B	X
0	0	0
0	1	1
1	0	1
1	1	0

MB84081B (FUJITSU)
TC4081BP (TOSHIBA)
C-MOS 2-INPUT AND GATE
—TOP VIEW—

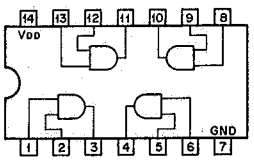

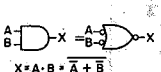

$X = A \cdot B = \overline{\overline{A} + \overline{B}}$

A	B	X
0	0	0
0	1	0
1	0	0
1	1	1

MBM2149L-55 (FUJITSU)

N-MOS 4096-BIT(1024 x 4) STATIC RAM WITH 3-STATE OUTPUT

—TOP VIEW—

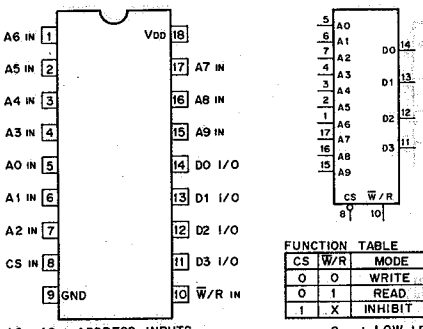

FUNCTION TABLE

CS	W/R	MODE	I/O
0	0	WRITE	INPUT
0	1	READ	OUTPUT
1	X	INHIBIT	HIGH Z

A0 – A9 ; ADDRESS INPUTS
CS ; CHIP SELECT INPUT
D0 – D3 ; DATA INPUT/OUTPUT (3-STATE)
W/R ; WRITE/READ ENABLE INPUT

0 ; LOW LEVEL
1 ; HIGH LEVEL
X ; DON'T CARE
HIGH Z ; HIGH IMPEDANCE

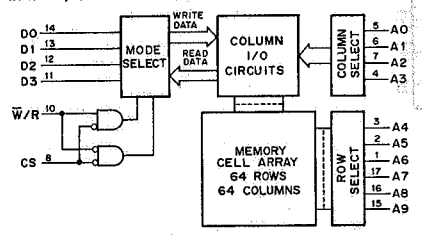

TYPE	-45	-55	-70	L-55	L-70
ADDRESS ACCESS TIME (MAX)	45nS	55nS	70nS	55nS	70nS
CHIP SELECT ACCESS TIME (MAX)	20nS	25nS	30nS	25nS	30nS
Icc (MAX)	180mA	180mA	180mA	125mA	125mA

MBM2732A-35Z (FUJITSU)

32K (4K-8) UV ERASABLE PROM

— TOP VIEW —

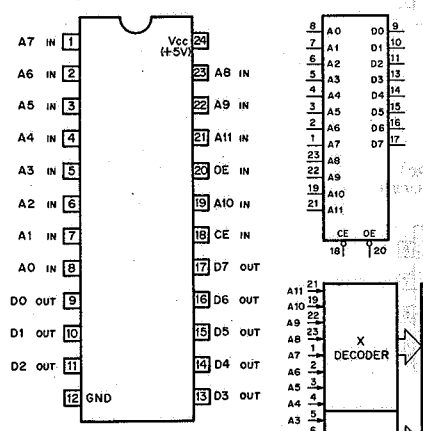

IN		OUT	FUNCTION
CE	OE	Dn	
0	0	DENTERED	READ
1	X	HIGH Z	STANDBY

0; LOW LEVEL
1; HIGH LEVEL
X; DON'T CARE
HIGH Z; HIGH IMPEDANCE

A0 – A11 ; ADDRESS
CE ; CHIP ENABLE
OE ; OUTPUT ENABLE
D0 – D7 ; DATA OUTPUTS

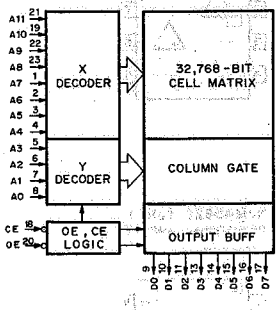

MC10113L (MOTOROLA)

ECL EXCLUSIVE OR GATE

—TOP VIEW—

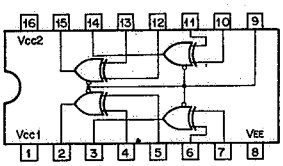

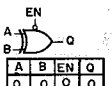

A	B	EN	Q
0	0	0	0
0	1	0	1
1	0	0	1
1	1	0	0
X	X	1	0

MC10198L (MOTOROLA)

RETRIGGERABLE MONOSTABLE MULTIVIBRATOR

– TOP VIEW –

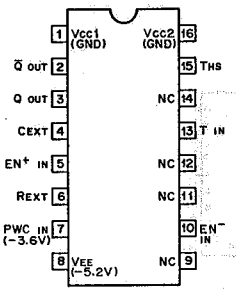

RETRIGGERABLE MMV

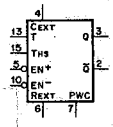

NON-RETRIGGERABLE MMV

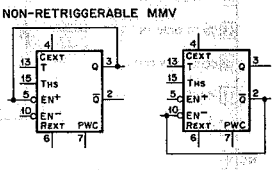

T : CLOCK TRIGGER INPUT
THS : HIGH-SPEED CLOCK TRIGGER INPUT
EN+ : TRIGGER POSITIVE ENABLE
EN- : TRIGGER NEGATIVE ENABLE
PWC : EXTERNAL PULSE WIDTH CONTROL

OUTPUT PULSE WIDTH : PWQ
PWQ = 1.19 · CEXT (REXT + 284)
WHERE
PWQ = SEC
CEXT = FARADS
REXT = OHMS
VEE = -5.2V
PWC = -3.6V

NOTE ; · SELECT REXT RANGING FROM ZERO TO 16K OHMS.
· SELECT CEXT GREATER THAN 20PF.

FUNCTION TABLE

EN+	EN-	TRIG. SLOPE
0	0	⎍
0	1	⎍
1	0	⎍
1	1	DISABLE

0; LOW LEVEL
1; HIGH LEVEL

MSM2128-1AS (OKI) (ACCESS TIME = 200nS)
MSM2128-12RS (OKI) (ACCESS TIME = 300nS)
MSM2128-15RS (OKI) (ACCESS TIME = 450nS)

N-MOS 16384(2048 x 8)-BIT STATIC RAM

— TOP VIEW —

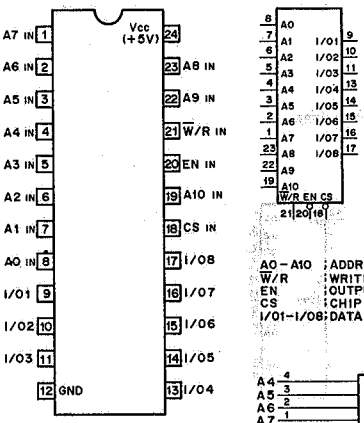

INPUTS			FUNCTION
CS	W/R	EN	
0	0	X	WRITE
0	1	0	READ
0	1	1	DISABLE (OUTPUT=HI-Z)
1	X	X	DISABLE (OUTPUT=HI-Z)

A0 – A10 ; ADDRESS INPUTS
W/R ; WRITE / READ ENABLE
EN ; OUTPUT ENABLE
CS ; CHIP SELECT
I/01 – I/08 ; DATA INPUTS / OUTPUTS

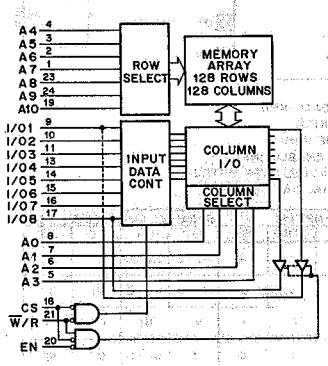

SEMICONDUCTOR ELECTRODES

MSM4022RS (OKI)
TC4022BP (TOSHIBA)
C-MOS OCTAL COUNTER/DIVIDER

—TOP VIEW—

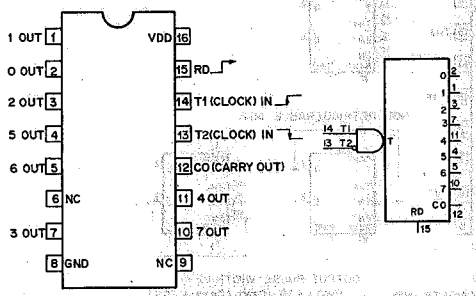

COUNT	INPUTS RD	INPUTS T·T1·T2	OUTPUTS 7	6	5	4	3	2	1	0	CO
0	1	X	0	0	0	0	0	0	0	1	1
0	0	↑	0	0	0	0	0	0	0	1	1
1	0	↑	0	0	0	0	0	0	1	0	1
2	0	↑	0	0	0	0	0	1	0	0	1
3	0	↑	0	0	0	0	1	0	0	0	1
4	0	↑	0	0	0	1	0	0	0	0	0
5	0	↑	0	0	1	0	0	0	0	0	0
6	0	↑	0	1	0	0	0	0	0	0	0
7	0	↑	1	0	0	0	0	0	0	0	0
NO COUNT	0	1	NO CHANGE								
	0	0									

1: HIGH
0: LOW
X: DON'T CARE

MSM4094RS (OKI)
C-MOS 8-STAGE SHIFT-AND-STORE BUS REGISTER
-TOP VIEW-

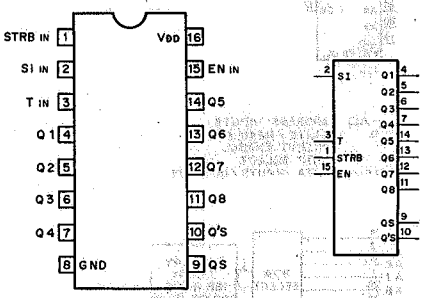

SI ; SERIAL DATA INPUT
T ; CLOCK INPUT
STRB ; STROBE INPUT
EN ; OUTPUT ENABLE INPUT
Q1~Q8 ; PARALLEL DATA OUTPUTS
QS, Q'S ; SERIAL DATA OUTPUTS

INPUTS T	EN	STRB	SI	PARALLEL OUT Q1	Qn	SERIAL OUT QS	Q'S
↑	0	X	X	HI-Z	HI-Z	Q7	NC
↓	0	X	X	HI-Z	HI-Z	NC	Q7
↑	1	0	X	NC	NC	Q7	NC
↑	1	1	0	0	Qn-1	Q7	NC
↑	1	1	1	1	Qn-1	Q7	NC
↓	1	1	1	NC	NC	NC	Q7

1 ; HIGH
0 ; LOW
X ; DON'T CARE
HI-Z ; HIGH IMPEDANCE
NC ; NO CHANGE

NJM2043D (JRC)
OPERATIONAL AMPLIFIER
-TOP VIEW-

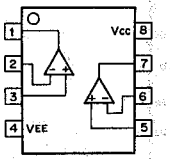

NJM2903D (JRC)
OPERATIONAL AMPLIFIER
-TOP VIEW-

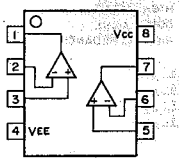

NJM4558D (JRC)
μPC4558C (NEC)
OPERATIONAL AMPLIFIER
-TOP VIEW-

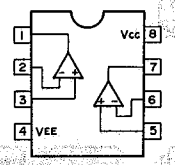

NJM4560D (JRC)
OPERATIONAL AMPLIFIER
-TOP VIEW-

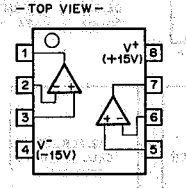

NJM4562D (JRC)
OPERATIONAL AMPLIFIER
-TOP VIEW-

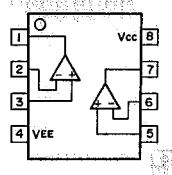

NJM78L □□A (JRC)
VOLTAGE REGULATOR

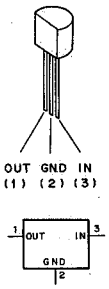

2V	NJM78L02A
5V	NJM78L05A
6V	NJM78L06A
8V	NJM78L08A
9V	NJM78L09A
12V	NJM78L12A
15V	NJM78L15A

NJM78M□□A (JRC)
VOLTAGE REGULATOR
—FRONT VIEW —

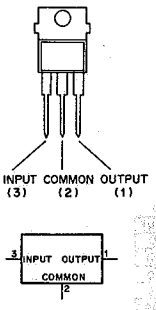

5V	NJM78M05A
6V	NJM78M06A
8V	NJM78M08A
9V	NJM78M09A
12V	NJM78M12A
15V	NJM78M15A
18V	NJM78M18A
20V	NJM78M20A
24V	NJM78M24A

SN7400N (TI)
SN74LS00N (TI)
TTL NAND GATE
—TOP VIEW—

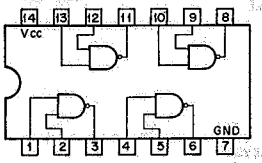

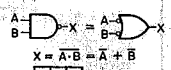

$X = \overline{A \cdot B} = \overline{A} + \overline{B}$

A	B	X
L	L	H
L	H	H
H	L	H
H	H	L

SN7404N (TI)
SN74LS04N (TI)
TTL INVERTER
—TOP VIEW—

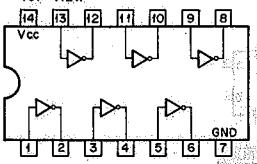

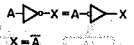

$X = \overline{A}$

A	X
L	H
H	L

SN7406N (TI)
TTL INVERTER BUFFER/DRIVER
WITH OPEN-COLLECTOR
—TOP VIEW—

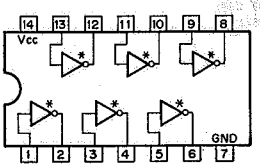

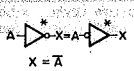

$X = \overline{A}$

A	X
L	H
H	L

SN7408N (TI)
SN74LS08N (TI)
TTL 2-INPUT POSITIVE-AND GATE
— TOP VIEW —

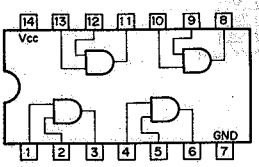

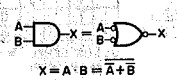

$X = A \cdot B = \overline{\overline{A} + \overline{B}}$

A	B	X
L	L	L
L	H	L
H	L	L
H	H	H

SN74191N (TI)
SN74LS191N (TI)
TTL PRESETTABLE SYNCHRONOUS 4-BIT BINARY UP/DOWN COUNTER
— TOP VIEW —

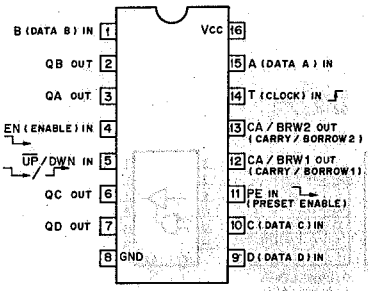

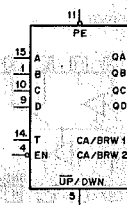

MODE SELECTION

CONTROL INPUTS			MODE
PE	EN	UP/DWN	
0	X	X	PRESET (ASYNCHRONOUS)
1	1	X	NO COUNT
1	0	0	UP COUNT
1	0	1	DOWN COUNT

0; LOW LEVEL
1; HIGH LEVEL
X; DON'T CARE.

CA/BRW OUTPUTS

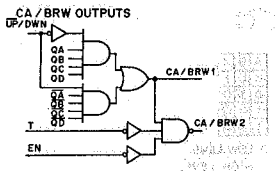

COUNT SEQUENCE

COUNT	OUTPUTS			
	QD	QC	QB	QA
0	0	0	0	0
1	0	0	0	1
2	0	0	1	0
3	0	0	1	1
4	0	1	0	0
5	0	1	0	1
6	0	1	1	0
7	0	1	1	1
8	1	0	0	0
9	1	0	0	1
10	1	0	1	0
11	1	0	1	1
12	1	1	0	0
13	1	1	0	1
14	1	1	1	0
15	1	1	1	1

UP COUNT
DOWN COUNT

CA/BRW1 OUTPUT IS HIGH WHEN COUNT IS "15" AT UP-COUNT OR WHEN COUNT IS "0" AT DOWN COUNT.

CA/BRW2 OUTPUT IS LOW WHEN BOTH THE CLOCK AND EN INPUTS ARE LOW AND CA/BRW1 OUTPUT IS HIGH.

SN74265N (TI)
TTL COMPLEMENTARY-OUTPUT ELEMENT
— TOP VIEW —

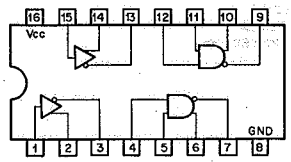

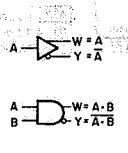

SEMICONDUCTOR ELECTRODES

SN74273N (TI)
SN74LS273N (TI)
TTL D-TYPE FLIP-FLOP WITH DIRECT RESET
—TOP VIEW—

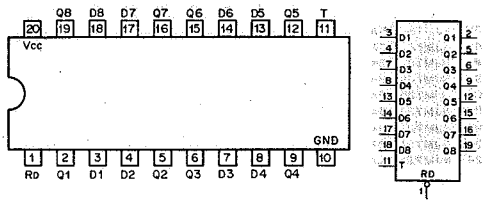

EACH FLIP-FLOP

INPUTS			OUT
RD	T	D	Q
0	X	X	0
1	↓	0	0
1	↓	1	1
1	0	X	Q0

0 ;LOW LEVEL
1 ;HIGH LEVEL
X ;DON'T CARE

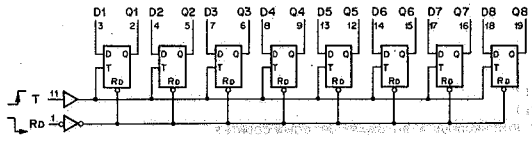

SN74365AN (TI)
TTL 3-STATE BUS DRIVER
—TOP VIEW—

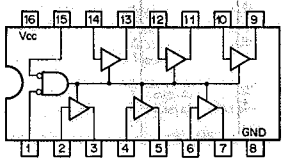

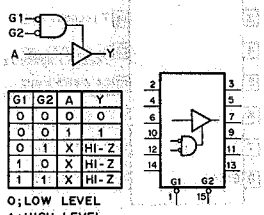

G1	G2	A	Y
0	0	0	0
0	0	1	1
0	1	X	HI-Z
1	0	X	HI-Z
1	1	X	HI-Z

0;LOW LEVEL
1;HIGH LEVEL
X;DON'T CARE
HI-Z;HIGH IMPEDANCE

SN74LS02N (TI)
TTL 2-INPUT POSITIVE-NOR GATE
—TOP VIEW—

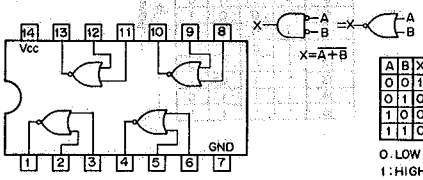

A	B	X
0	0	1
0	1	0
1	0	0
1	1	0

0:LOW LEVEL
1:HIGH LEVEL

SN74LS05N (TI)
TTL INVERTER WITH OPEN-COLLECTOR
-TOP VIEW-

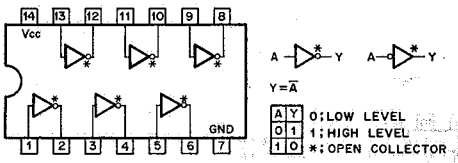

A	Y
0	1
1	0

0;LOW LEVEL
1;HIGH LEVEL
*;OPEN COLLECTOR

SN74LS10N (TI)
TTL 3-INPUT POSITIVE NAND GATE
—TOP VIEW—

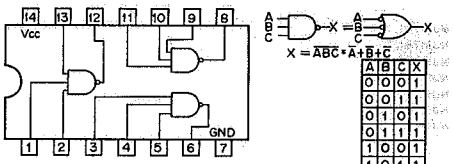

A	B	C	X
0	0	0	1
0	0	1	1
0	1	0	1
0	1	1	1
1	0	0	1
1	0	1	1
1	1	0	1
1	1	1	0

0:LOW LEVEL
1:HIGH LEVEL

SN74LS11N (TI)
TTL 3-INPUT POSITIVE-AND GATE
—TOP VIEW—

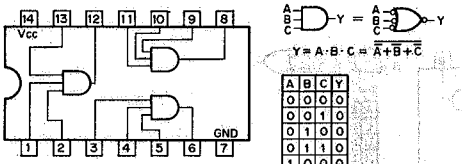

A	B	C	Y
0	0	0	0
0	0	1	0
0	1	0	0
0	1	1	0
1	0	0	0
1	0	1	0
1	1	0	0
1	1	1	1

0;LOW LEVEL
1;HIGH LEVEL

SN74LS112AN (TI)
TTL J-K FLIP-FLOP WITH DIRECT SET/RESET
—TOP VIEW—

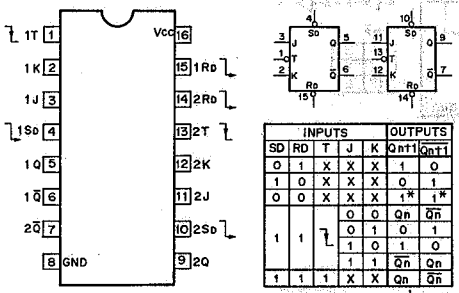

INPUTS					OUTPUTS	
SD	RD	T	J	K	Qn+1	$\overline{Qn+1}$
0	1	X	X	X	1	0
1	0	X	X	X	0	1
0	0	X	X	X	1*	1*
1	1	↓	0	0	Qn	$\overline{Qn}$
			0	1	0	1
			1	0	1	0
			1	1	$\overline{Qn}$	Qn
1	1	1	X	X	Qn	$\overline{Qn}$

0;LOW LEVEL X;DON'T CARE
1;HIGH LEVEL *;NONSTABLE

SN74LS113AN (TI)
TTL J-K FILP FLOP WITH DIRECT SET
—TOP VIEW—

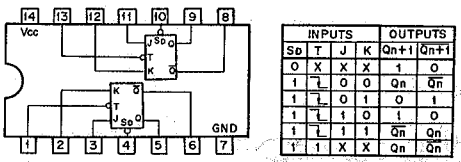

INPUTS				OUTPUTS	
Sd	T	J	K	Qn+1	$\overline{Qn+1}$
0	X	X	X	1	0
1	↓	0	0	Qn	$\overline{Qn}$
1	↓	0	1	0	1
1	↓	1	0	1	0
1	↓	1	1	$\overline{Qn}$	Qn
1	1	X	X	Qn	$\overline{Qn}$

0;LOW LEVEL X;DON'T CARE
1;HIGH LEVEL

SN74LS123N (TI)

TTL RETRIGGERABLE MONOSTABLE MULTIVIBRATOR WITH DIRECT RESET

— TOP VIEW —

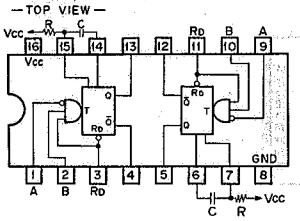

INPUTS			OUTPUTS	
Rd	A	B	Q	Q̄
L	X	X	L	H
X	H	X	L	H
X	X	L	L	H
H	L	↑	↑	↓
H	↑	H	↑	↓
↑	L	H	↑	↓

OUTPUT PULSE WIDTH

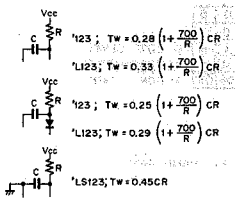

SN74LS161AN (TI)

TTL PRESETTABLE SYNCHRONOUS 4-BIT BINARY COUNTER

— TOP VIEW —

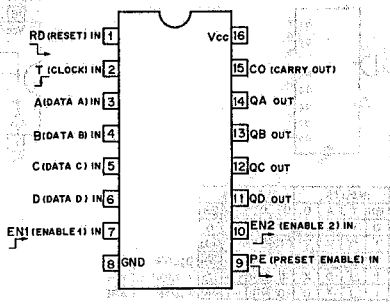

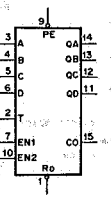

MODE SELECTION

CONTROL INPUTS				MODE
Ro	PE	EN1	EN2	
0	X	X	X	RESET (ASYNCHRONOUS)
1	0	X	X	PRESET (SYNCHRONOUS)
1	1	0	X	NO COUNT
1	1	X	0	NO COUNT
1	1	1	1	COUNT

0; LOW LEVEL
1; HIGH LEVEL
X; DON'T CARE

COUNT SEQUENCE

COUNT	OUTPUTS			
	QD	QC	QB	QA
0	0	0	0	0
1	0	0	0	1
2	0	0	1	0
3	0	0	1	1
4	0	1	0	0
5	0	1	0	1
6	0	1	1	0
7	0	1	1	1
8	1	0	0	0
9	1	0	0	1
10	1	0	1	0
11	1	0	1	1
12	1	1	0	0
13	1	1	0	1
14	1	1	1	0
15	1	1	1	1

CARRY OUTPUT "CO"

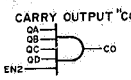

CO IS HIGH WHEN EN2 INPUT IS HIGH AND COUNT IS "15".

SN74LS151N (TI)

TTL 8-LINE-TO-1-LINE DATA SELECTOR/MULTIPLEXER

— TOP VIEW —

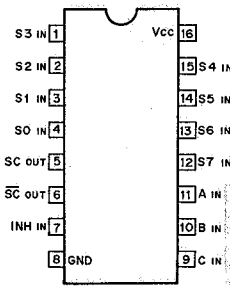

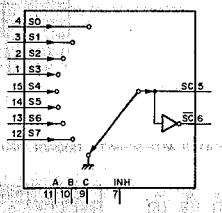

CONTROL INPUTS				ON CHANNEL
INH	C	B	A	
0	0	0	0	0
0	0	0	1	1
0	0	1	0	2
0	0	1	1	3
0	1	0	0	4
0	1	0	1	5
0	1	1	0	6
0	1	1	1	7
1	X	X	X	GND

0; LOW LEVEL
1; HIGH LEVEL
X; DON'T CARE

SN74LS163AN (TI)
SN74S163N (TI)

TTL PRESETTABLE SYNCHRONOUS 4-BIT BINARY COUNTER

— TOP VIEW —

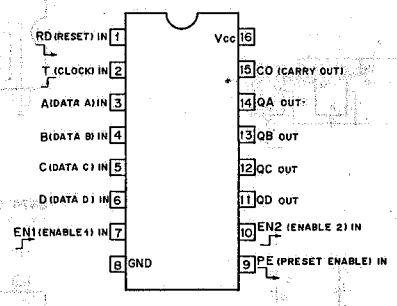

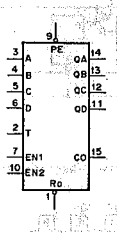

MODE SELECTION

CONTROL INPUTS				MODE
Ro	PE	EN1	EN2	
0	X	X	X	RESET (SYNCHRONOUS)
1	0	X	X	PRESET (SYNCHRONOUS)
1	1	0	X	NO COUNT
1	1	X	0	NO COUNT
1	1	1	1	COUNT

0; LOW LEVEL
1; HIGH LEVEL
X; DON'T CARE

COUNT SEQUENCE

COUNT	OUTPUTS			
	QD	QC	QB	QA
0	0	0	0	0
1	0	0	0	1
2	0	0	1	0
3	0	0	1	1
4	0	1	0	0
5	0	1	0	1
6	0	1	1	0
7	0	1	1	1
8	1	0	0	0
9	1	0	0	1
10	1	0	1	0
11	1	0	1	1
12	1	1	0	0
13	1	1	0	1
14	1	1	1	0
15	1	1	1	1

CARRY OUTPUT "CO"

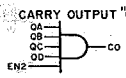

CO IS HIGH WHEN EN2 INPUT IS HIGH AND COUNT IS "15".

SN74LS157N (TI)

TTL 2-LINE-TO-1-LINE DATA SELECTOR/MULTIPLEXER

— TOP VIEW —

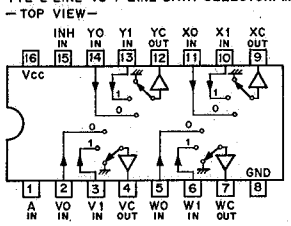

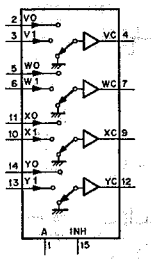

CONT. IN		ON CHANNEL
INH	A	
L	L	0
L	H	1
H	X	GND

SEMICONDUCTOR ELECTRODES

SN74LS164N (TI)
TTL 8-BIT PARALLEL-OUT SERIAL SHIFT REGISTER
—TOP VIEW—

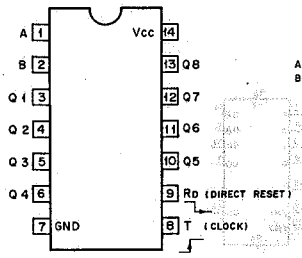

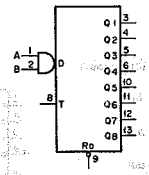

INPUTS				OUTPUTS			
RD	T	A	B	Q1	Q2	----	Q8
0	X	X	X	0	0	0	0
1	0	X	X	Q1o	Q2o	----	Q8o
1	↑	1	1	1	Q1n	----	Q7n
1	↑	0	X	0	Q1n	----	Q7n
1	↑	X	0	0	Q1n	----	Q7n

0;LOW LEVEL
1;HIGH LEVEL
X;DON'T CARE

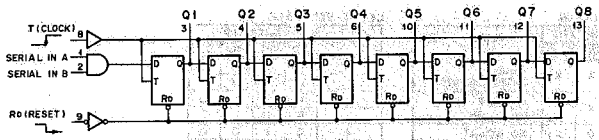

SN74LS166AN (TI)
TTL 8-BIT SHIFT REGISTER
—TOP VIEW—

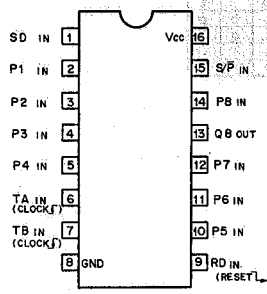

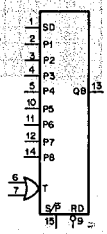

SD; SERIAL DATA INPUT
P1~P8; PARALLEL DATA INPUTS

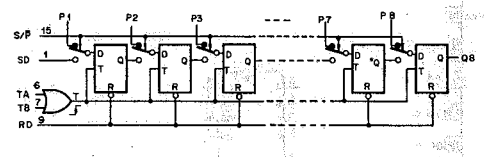

SN74LS174N (TI)
TTL D-TYPE FLIP-FLOP WITH DIRECT RESET
—TOP VIEW—

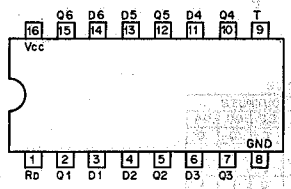

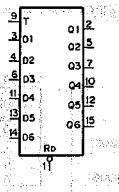

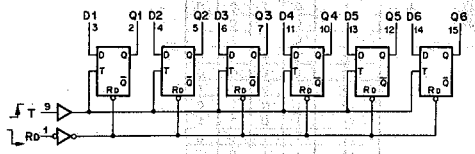

EACH FLIP-FLOP

INPUTS			OUT
RD	T	D	Q
0	X	X	0
1	↓	0	0
1	↑	1	1
1	0	X	Qo

0;LOW LEVEL
1;HIGH LEVEL
X;DON'T CARE

SN74LS175N (TI)
TTL D-TYPE FLIP-FLOP WITH CLEAR
—TOP VIEW—

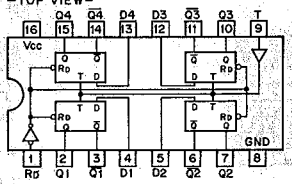

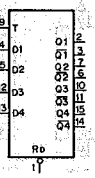

RD	T	D	Q	Q̄
0	X	X	0	1
1	↓	1	1	0
1	↓	0	0	1
1	0	X	Qo	Q̄o

0;LOW LEVEL
1;HIGH LEVEL
X;DON'T CARE

SN74LS20N (TI)
TTL 4-INPUT POSITIVE NAND GATE
—TOP VIEW—

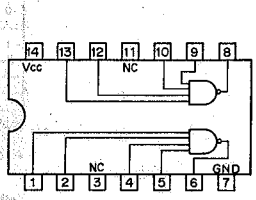

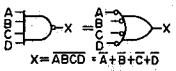

$X = \overline{ABCD} = \overline{A}+\overline{B}+\overline{C}+\overline{D}$

A	B	C	D	X
0	0	0	0	1
0	0	0	1	1
0	0	1	0	1
0	0	1	1	1
0	1	0	0	1
⋮	⋮	⋮	⋮	⋮
1	1	0	1	1
1	1	1	0	1
1	1	1	1	0

0;LOW LEVEL
1;HIGH LEVEL

SN74LS221N (TI)
TTL MONOSTABLE MULTIVIBRATOR WITH SCHMITT TRIGGER INPUT
—TOP VIEW—

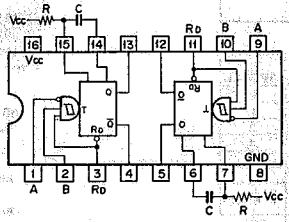

INPUTS			OUTPUTS	
RD	A	B	Q	Q̄
L	X	X	L	H
X	H	X	L	H
X	X	L	L	H
H	L	↑	↑L	↓H
H	↓	H	↑L	↓H
↑	L	H	↑L	↓H

OUTPUT PULSE WIDTH = 0.7CR

SN74LS30N (TI)
TTL 8-INPUT NAND GATE
—TOP VIEW—

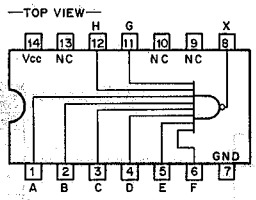

$X = \overline{A \cdot B \cdot C \cdot D \cdot E \cdot F \cdot G \cdot H}$
$= \overline{A}+\overline{B}+\overline{C}+\cdots\cdots+\overline{H}$

SN74LS32N (TI)
SN74S32N (TI)
TTL 2-INPUT POSITIVE-OR GATE
—TOP VIEW—

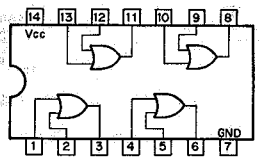

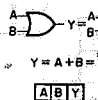

$Y = A+B = \overline{\overline{A}\cdot\overline{B}}$

A	B	Y
0	0	0
0	1	1
1	0	1
1	1	1

0;LOW LEVEL
1;HIGH LEVEL

SN74LS374N (TI)

TTL 3-STATE OUTPUTS OCTAL D-TYPE FLIP-FLOP

– TOP VIEW –

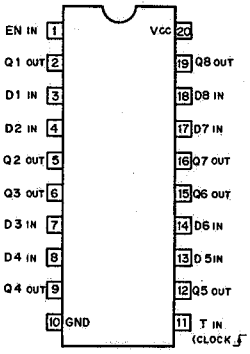

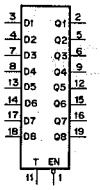

INPUTS			OUT
EN	D	T	Q
0	1	↑	1
0	0	↑	0
0	X	0	Qo
1	X	X	HI-Z

0; LOW LEVEL
1; HIGH LEVEL
X; DON'T CARE
HI-Z; HIGH IMPEDANCE

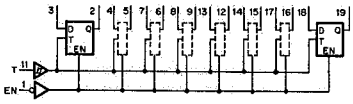

SN74LS423N (TI)

TTL RETRIGGERABLE MONOSTABLE MULTIVIBRATOR WITH DIRECT RESET

—TOP VIEW—

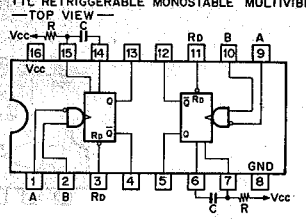

INPUTS			OUTPUTS	
Rd	A	B	Q	$\overline{Q}$
0	X	X	0	1
X	1	X	0	1
X	X	0	0	1
1	0	↑	↑	↓
1	↓	1	↑	↓

0:LOW LEVEL
1:HIGH LEVEL
X:DON'T CARE

OUTPUT PULSE WIDTH
VS
EXTERNAL TIMING CAPACITOR

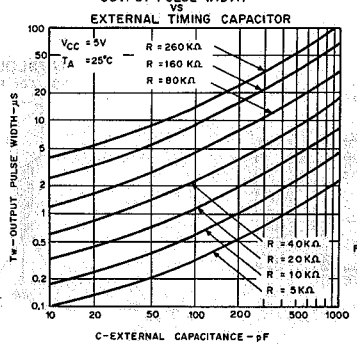

FOR Tw ≧ 100μS OR C ≧ 1000pF,
Tw = 0.38CR

SN74LS37N (TI)

TTL 2-INPUT POSITIVE-NAND GATE BUFFER

– TOP VIEW –

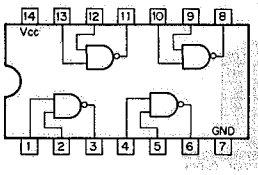

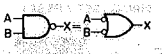

$X = A \cdot B = \overline{A + B}$

A	B	X
L	L	H
L	H	H
H	L	H
H	H	L

SN74LS74AN (TI)

TTL D-TYPE FLIP FLOP WITH DIRECT SET/RESET

—TOP VIEW—

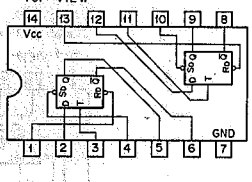

INPUTS				OUTPUTS	
So	Rd	T	D	Qn+1	$\overline{Qn+1}$
L	H	X	X	H	L
H	L	X	X	L	H
L	L	X	X	H*	H*
H	H	↑	H	H	L
H	H	↑	L	L	H
H	H	L	X	Qn	$\overline{Qn}$

* UNSTABLE

SN74LS85N (TI)

TTL 4-BIT MAGNITUDE COMPARATOR

– TOP VIEW –

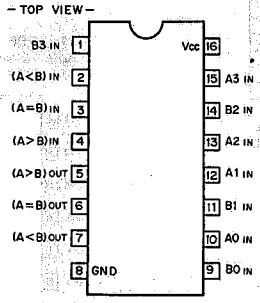

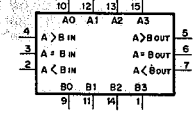

SN74LS393N (TI)

TTL 4-BIT BINARY COUNTER

—TOP VIEW—

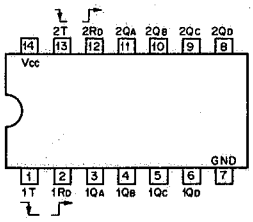

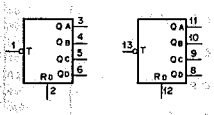

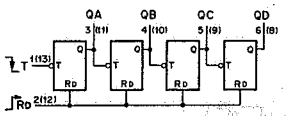

COUNT SEQUENCE

COUNT	QD	QC	QB	QA
0	0	0	0	0
1	0	0	0	1
2	0	0	1	0
3	0	0	1	1
4	0	1	0	0
5	0	1	0	1
6	0	1	1	0
7	0	1	1	1
8	1	0	0	0
9	1	0	0	1
10	1	0	1	0
11	1	0	1	1
12	1	1	0	0
13	1	1	0	1
14	1	1	1	0
15	1	1	1	1

RESET/COUNT FUNCTION

Rd	QD	QC	QB	QA
1	0	0	0	0
0	COUNT			

INPUTS									OUTPUTS		
DATA COMPARING					CASCADING						
	A3, B3	A2, B2	A1, B1	A0, B0	A<B	A=B	A>B		A<B	A=B	A>B
A>B	A3>B3	X	X	X	X	X	X		0	0	1
	A3=B3	A2>B2	X	X							
	A3=B3	A2=B2	A1>B1	X							
	A3=B3	A2=B2	A1=B1	A0>B0							
A=B	A3=B3	A2=B2	A1=B1	A0=B0	0	0	0		1	0	1
					0	0	1		0	0	1
					X	1	X		0	1	0
					1	0	0		1	0	0
					1	0	1		0	0	0
A<B	A3=B3	A2=B2	A1=B1	A0<B0	X	X	X		1	0	0
	A3=B3	A2=B2	A1<B1	X							
	A3=B3	A2<B2	X	X							
	A3<B3	X	X	X							

0; LOW LEVEL 1; HIGH LEVEL X; DON'T CARE

SEMICONDUCTOR ELECTRODES

SN74S51N (TI)
TTL 2-WIDE 2-INPUT AND-OR-INVERT GATE
— TOP VIEW —

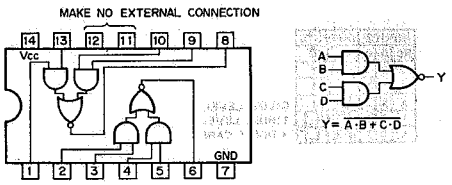

SN75454BP (TI)
TTL PERIPHERAL POSITIVE-NOR DRIVER
WITH OPEN COLLECTOR
— TOP VIEW —

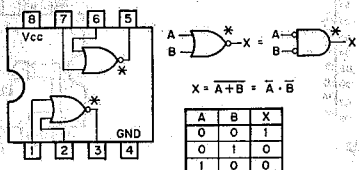

A	B	X
0	0	1
0	1	0
1	0	0
1	1	0

SN75107AN (TI)
LINE RECEIVER
—TOP VIEW—

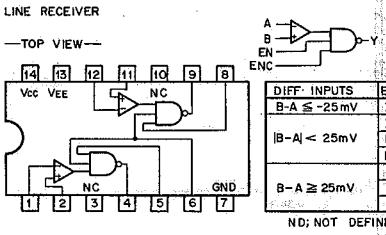

DIFF. INPUTS	EN	ENC	Y
B-A ≦ -25mV	X	X	H
|B-A| < 25mV	X	L	H
	L	X	H
	H	H	N·D
B-A ≧ 25mV	X	L	H
	L	X	H
	H	H	L

ND; NOT DEFINED

TA78L000AP (TOSHIBA)
VOLTAGE REGULATOR

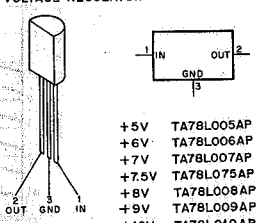

+5V	TA78L005AP
+6V	TA78L006AP
+7V	TA78L007AP
+7.5V	TA78L075AP
+8V	TA78L008AP
+9V	TA78L009AP
+10V	TA78L010AP
+12V	TA78L012AP
+13.2V	TA78L132AP
+15V	TA78L015AP
+18V	TA78L018AP
+20V	TA78L020AP
+24V	TA78L024AP

SN75110AN (TI)
LINE DRIVER
—TOP VIEW—

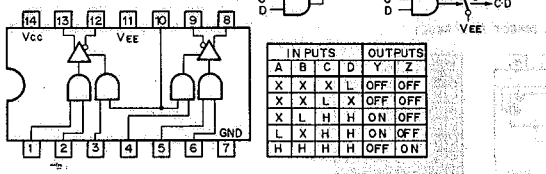

IN PUTS				OUTPUTS	
A	B	C	D	Y	Z
X	X	X	L	OFF	OFF
X	X	L	X	OFF	OFF
X	L	H	H	ON	OFF
L	X	H	H	ON	OFF
H	H	H	H	OFF	ON

TC4013BP (TOSHIBA)
C-MOS D-TYPE FLIP FLOP WITH DIRECT SET / RESET
-TOP VIEW-

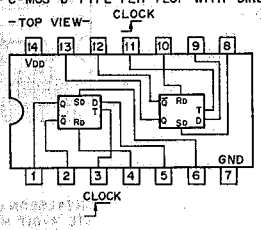

DIRECT R-S FLIP FLOP

Sd	Rd	Q	$\overline{Q}$
0	0	Qn	$\overline{Qn}$
0	1	0	1
1	0	1	0
1	1	0	1

D-TYPE FLIP FLOP

tn	tn+1
D	Q
0	0
1	1

CLOCK T;
tn; BEFORE CLOCK
tn+1; AFTER CLOCK

0; LOW LEVEL
1; HIGH LEVEL

SN75207BN (TI)
BIPOLAR LINE RECEIVER (TTL COMPATIBLE)
— TOP VIEW —

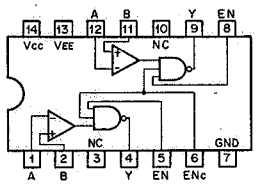

INPUTS			OUT
B-A	EN	ENc	Y
B-A ≧ 10mV	X	0	1
	0	X	1
	1	1	0
|B-A| < 10mV	X	0	1
	0	X	1
	1	1	?
B-A ≦ -10mV	X	X	1

0; LOW LEVEL
1; HIGH LEVEL
X; DON'T CARE

TC4020BP (TOSHIBA)
C-MOS 14-STAGE RIPPLE-CARRY BINARY COUNTER/DRIVER
— TOP VIEW —

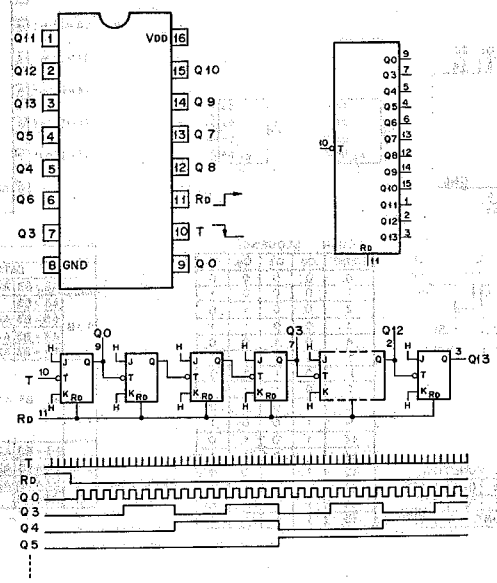

SN75452BP (TI)
TTL PERIPHERAL POSITIVE-NAND DRIVER
WITH OPEN-COLLECTOR
— TOP VIEW —

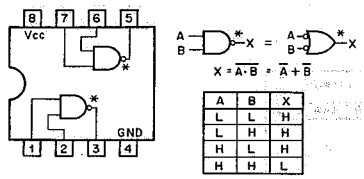

A	B	X
L	L	H
L	H	H
H	L	H
H	H	L

TA7060AP (TOSHIBA)
LINEAR AMP
— SIDE VIEW —

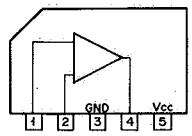

TC4021BP (TOSHIBA)

C-MOS ASYNCHRONOUS PARALLEL/SYNCHRONOUS SERIAL INPUT 8-BIT STAIC SHIFT REGISTER

— TOP VIEW —

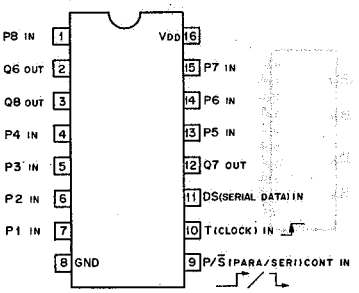

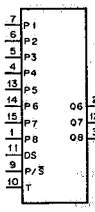

tn				tn + 1							
INPUT				INTERNAL OUTPUTS					OUTPUTS		
P/S CONT	T	P	DS	Q1	Q2	Q3	Q4	Q5	Q6	Q7	Q8
1	X	P1 ~ P8	X	P1	P2	P3	P4	P5	P6	P7	P8
0	↓	X	1	1	Q1n	Q2n	Q3n	Q4n	Q5n	Q6n	Q7n
0	↓	X	0	0	Q1n	Q2n	Q3n	Q4n	Q5n	Q6n	Q7n
X	0	X	X	Q1n	Q2n	Q3n	Q4n	Q5n	Q6n	Q7n	Q8n

tn ; BEFORE CLOCK
tn+1 ; AFTER CLOCK

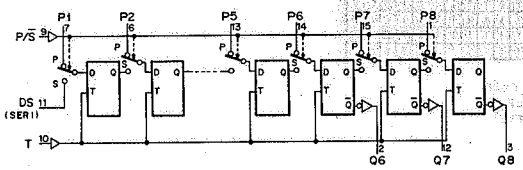

TC4024BP (TOSHIBA)

C-MOS ASYNCHRONOUS 7-BIT BINARY COUNTER

— TOP VIEW —

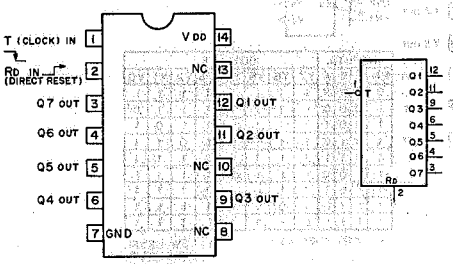

COUNT	INPUTS		OUTPUTS						
	T	RD	Q7	Q6	Q5	Q4	Q3	Q2	Q1
0	X	1	0	0	0	0	0	0	0
1	↓	0	0	0	0	0	0	0	1
2	↓	0	0	0	0	0	0	1	0
3	↓	0	0	0	0	0	0	1	1
4	↓	0	0	0	0	0	1	0	0
125	↓	0	1	1	1	1	1	0	1
126	↓	0	1	1	1	1	1	1	0
127	↓	0	1	1	1	1	1	1	1
—	0	0	NO CHANGE						
—	1	0							

0 ; LOW
1 ; HIGH
X ; DONT'CARE

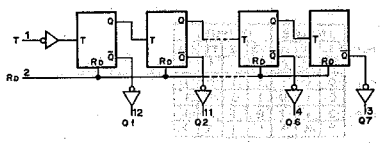

TC4030BP (TOSHIBA)

C-MOS EXCLUSIVE OR GATE

— TOP VIEW —

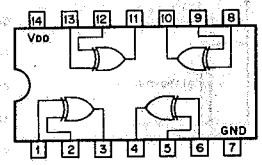

$X = \bar{A} \cdot B + A \cdot \bar{B}$

A	B	X
0	0	0
0	1	1
1	0	1
1	1	0

TC4050BP (TOSHIBA)

C-MOS NON-INVERTING TYPE BUFFER/CONVERTER

— TOP VIEW —

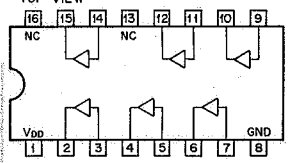

X = A

A	X
0	0
1	1

TC4066BP (TOSHIBA)

C-MOS BILATERAL ANALOG SWITCH

— TOP VIEW —

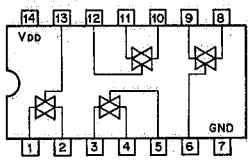

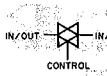

CONTROL	SWITCH
0	OFF
1	ON

TC4071BP (TOSHIBA)

C-MOS 2-INPUT OR GATE

— TOP VIEW —

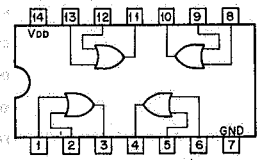

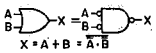

$X = A + B = \overline{\bar{A} \cdot \bar{B}}$

A	B	X
0	0	0
0	1	1
1	0	1
1	1	1

TC4073BP (TOSHIBA)

C-MOS 3-INPUT POSITIVE AND GATE

— TOP VIEW —

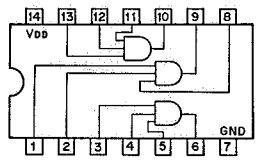

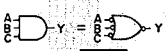

$Y = A \cdot B \cdot C = \overline{\bar{A} + \bar{B} + \bar{C}}$

A	B	C	Y
X	X	X	0
X	0	X	0
0	X	X	0
1	1	1	1

TC4075BP (TOSHIBA)

C-MOS 3-INPUT OR GATE

— TOP VIEW —

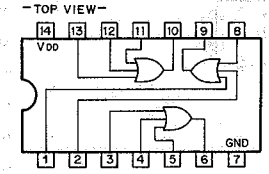

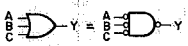

$Y = A + B + C = \overline{\bar{A} \cdot \bar{B} \cdot \bar{C}}$

C	B	A	Y
0	0	0	0
X	X	1	1
X	1	X	1
1	X	X	1

SEMICONDUCTOR ELECTRODES

TC 4093BP (TOSHIBA)

C-MOS 2-INPUT NAND SCHMITT TRIGGER
-TOP VIEW-

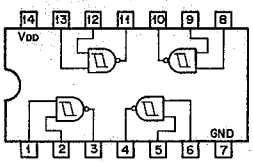

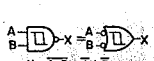

$X = \overline{A \cdot B} = \overline{A} + \overline{B}$

A	B	X
0	0	1
0	1	1
1	0	1
1	1	0

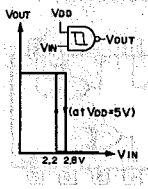

TC40H042P (TOSHIBA)

C-MOS BCD-TO-DECIMAL DECODER/DRIVER
— TOP VIEW —

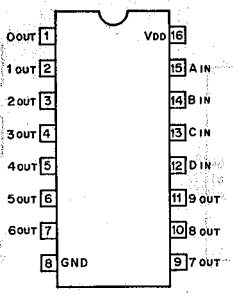

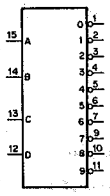

STATE	BCD INPUTS				DECIMAL OUTPUTS								
	A	B	C	D	0	1	2	3	4	5	6	7	8	9
0	0	0	0	0	0	1	1	1	1	1	1	1	1	1
1	1	0	0	0	1	0	1	1	1	1	1	1	1	1
2	0	1	0	0	1	1	0	1	1	1	1	1	1	1
3	1	1	0	0	1	1	1	0	1	1	1	1	1	1
4	0	0	1	0	1	1	1	1	0	1	1	1	1	1
5	1	0	1	0	1	1	1	1	1	0	1	1	1	1
6	0	1	1	0	1	1	1	1	1	1	0	1	1	1
7	1	1	1	0	1	1	1	1	1	1	1	0	1	1
8	0	0	0	1	1	1	1	1	1	1	1	1	0	1
9	1	0	0	1	1	1	1	1	1	1	1	1	1	0
10 ~ 15	X	1	X	1	1	1	1	1	1	1	1	1	1	1
	X	X	1	1	1	1	1	1	1	1	1	1	1	1

X : DON'T CARE
1 : HIGH LEVEL
0 : LOW LEVEL

TC40H004P (TOSHIBA)

C-MOS INVERTER
- TOP VIEW -

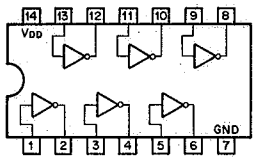

$X = \overline{A}$

A	X
0	1
1	0

TC40H011P (TOSHIBA)

C-MOS 3-INPUT POSITIVE-AND GATE
-TOP VIEW-

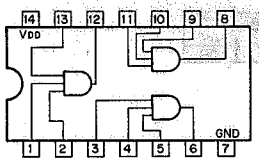

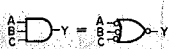

$Y = A \cdot B \cdot C = \overline{A+B+C}$

A	B	C	Y
0	0	0	0
0	0	1	0
0	1	0	0
0	1	1	0
1	0	0	0
1	0	1	0
1	1	0	0
1	1	1	1

0;LOW LEVEL
1;HIGH LEVEL

TC40H138P (TOSHIBA)

C-MOS 3-TO-8-LINE DECODER/DEMULTIPLEXER
—TOP VIEW—

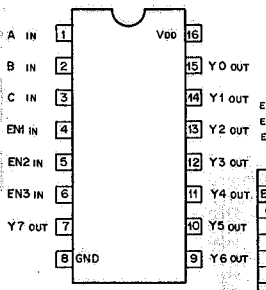

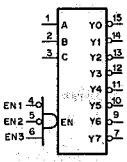

INPUTS				OUTPUTS							
EN	C	B	A	Y7	Y6	Y5	Y4	Y3	Y2	Y1	Y0
0	X	X	X	1	1	1	1	1	1	1	1
1	0	0	0	1	1	1	1	1	1	1	0
1	0	0	1	1	1	1	1	1	1	0	1
1	0	1	0	1	1	1	1	1	0	1	1
1	0	1	1	1	1	1	1	0	1	1	1
1	1	0	0	1	1	1	0	1	1	1	1
1	1	0	1	1	1	0	1	1	1	1	1
1	1	1	0	1	0	1	1	1	1	1	1
1	1	1	1	0	1	1	1	1	1	1	1

$EN = \overline{EN1} \cdot \overline{EN2} \cdot EN3$

0 ; LOW LEVEL
1 ; HIGH LEVEL
X ; DON'T CARE

TC40H032P (TOSHIBA)

C-MOS 2-INPUT POSITIVE-OR GATE
— TOP VIEW —

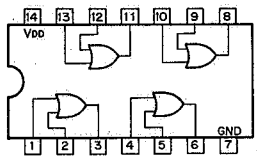

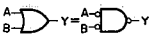

$Y = A + B = \overline{\overline{A} \cdot \overline{B}}$

A	B	Y
0	0	0
0	1	1
1	0	1
1	1	1

0;LOW LEVEL
1;HIGH LEVEL

TC40H074P (TOSHIBA)

C-MOS HIGH SPEED D-TYPE FLIP-FLOP WITH DIRECT SET/RESET
— TOP VIEW—

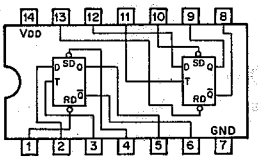

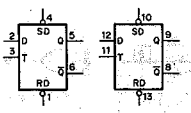

D-MODE

tn	tn + 1	
D	Q	$\overline{Q}$
0	0	1
1	1	0

R-S MODE

INPUT		OUTPUT	
RD	SD	Q	$\overline{Q}$
0	0	1	1
0	1	0	1
1	0	1	0
1	1	D-MODE	

0;LOW LEVEL
1;HIGH LEVEL

TC40H139P (TOSHIBA)

C-MOS 2-TO-4-LINE DECODER/DEMULTIPLXER
—TOP VIEW—

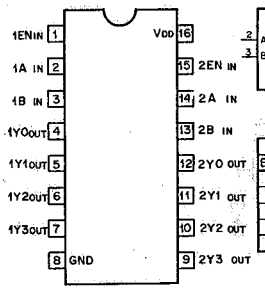

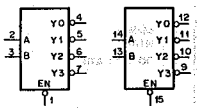

INPUTS			OUTPUTS			
EN	B	A	Y3	Y2	Y1	Y0
0	0	0	1	1	1	0
0	0	1	1	1	0	1
0	1	0	1	0	1	1
0	1	1	0	1	1	1
1	X	X	1	1	1	1

0 ; LOW LEVEL
1 ; HIGH LEVEL
X ; DON'T CARE

TC40H240P (TOSHIBA)
C-MOS 3-STATE INVERTER/LINE DRIVER
— TOP VIEW —

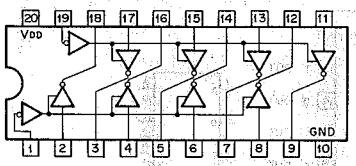

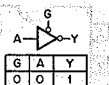

G	A	Y
0	0	1
0	1	0
1	X	HI-Z

0;LOW LEVEL
1;HIGH LEVEL
X;DON'T CARE
HI-Z;HIGH IMPEDANCE

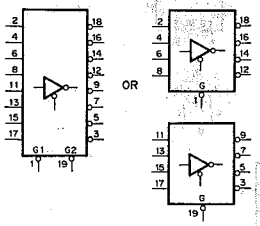

TC40H244P (TOSHIBA)
C-MOS 3-STATE BUFFER/DRIVER
— TOP VIEW —

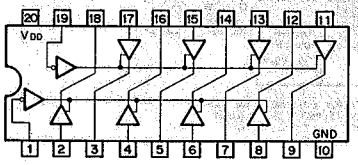

G	A	Y
0	0	0
0	1	1
1	X	HI-Z

0;LOW LEVEL
1;HIGH LEVEL
X;DON'T CARE
HI-Z;HIGH IMPEDANCE

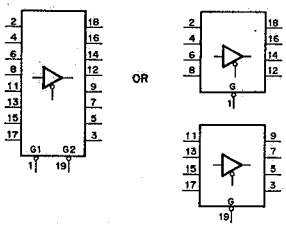

TC40H245P (TOSHIBA)
C-MOS BILATERAL BUS TRANSCEIVERS WITH 3-STATE OUTPUT
— TOP VIEW —

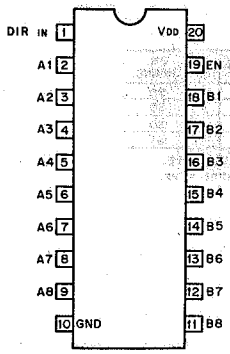

EN	DIR	OPERATION
0	0	B to A
0	1	A to B
1	X	HI-Z

0;LOW LEVEL
1;HIGH LEVEL
X;DON'T CARE

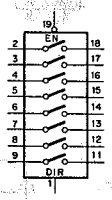

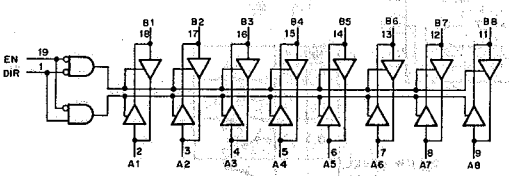

TC40H273P (TOSHIBA)
C-MOS D-TYPE FLIP-FLOP WITH DIRECT RESET
— TOP VIEW —

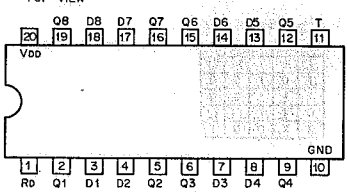

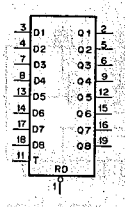

EACH FLIP-FLOP

INPUTS			OUT
RD	T	D	Q
0	X	X	0
1	↓	0	0
1	↓	1	1
1	0	X	Q0

0;LOW LEVEL
1;HIGH LEVEL
X;DON'T CARE

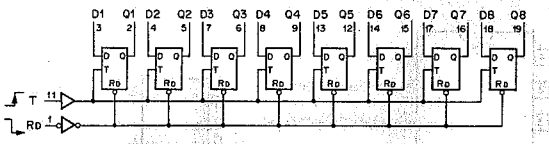

TC40H368P (TOSHIBA)
C-MOS INVERTING 3-STATE BUFFER
— TOP VIEW —

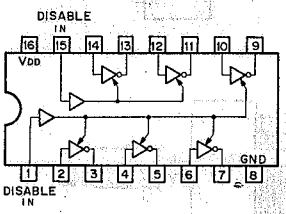

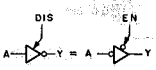

A	DIS	Y
0	0	1
1	0	0
X	1	HI-Z

0;LOW LEVEL
1;HIGH LEVEL
X;DON'T CARE
HI-Z;HIGH IMPEDANCE

TC4516BP (TOSHIBA)
C-MOS PRESETTABLE BINARY UP/DOWN COUNTER
— TOP VIEW —

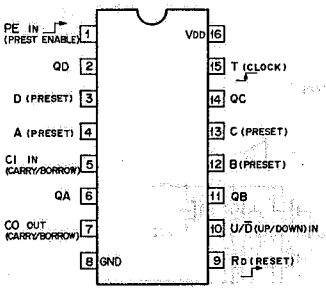

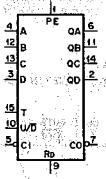

INPUTS					OUTPUTS			
T	RD	PE	CI	U/D	QD	QC	QB	QA
X	1	X	X	X	0	0	0	0
X	0	1	X	X	SET TO A,B,C,D			
↑	0	0	0	1	COUNT UP			
↓	0	0	0	0	COUNT DOWN			
0	0	0	X	X	NO CHANGE			
X	0	0	1	X	NO CHANGE			

CO=L
CI=L & (DOWN·COUNT "0" OR UP·COUNT "15")

COUNT	OUTPUTS			
	QD	QC	QB	QA
0	0	0	0	0
1	0	0	0	1
2	0	0	1	0
3	0	0	1	1
4	0	1	0	0
5	0	1	0	1
6	0	1	1	0
7	0	1	1	1
8	1	0	0	0
9	1	0	0	1
10	1	0	1	0
11	1	0	1	1
12	1	1	0	0
13	1	1	0	1
14	1	1	1	0
15	1	1	1	1

COUNT UP
COUNT DOWN

SEMICONDUCTOR ELECTRODES

TC4528BP (TOSHIBA)
C-MOS RETRIGGERABLE / RESETTABLE MMV
—TOP VIEW—

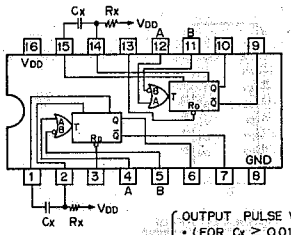

INPUTS			OUTPUTS	
A	B	Rd	Q	$\overline{Q}$
↓	1	1	↑	↓
↓	0	1	0	1
1	↓	1	0	1
0	↓	1	↑	↓
X	X	0	0	1

OUTPUT PULSE WIDTH Q OR $\overline{Q}$
- (FOR Cx ≧ 0.01μF USE FORMULA)
  PW = 0.2 · Rx · Cx · $\mathcal{L}n$ (VDD - GND)
- (FOR Cx < 0.01μF USE DATA BOOK)

TC4532BP (TOSHIBA)
C-MOS 8-BIT PRIORITY ENCODER
—TOP VIEW—

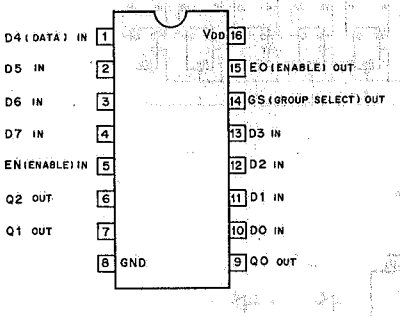

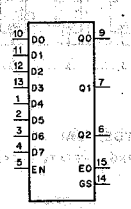

D7 IS THE HIGHEST PRIORITY

INPUTS									OUTPUTS				
EN	D7	D6	D5	D4	D3	D2	D1	D0	GS	Q2	Q1	Q0	EO
0	X	X	X	X	X	X	X	X	0	0	0	0	0
1	0	0	0	0	0	0	0	0	0	0	0	0	1
1	1	X	X	X	X	X	X	X	1	1	1	1	0
1	0	1	X	X	X	X	X	X	1	1	1	0	0
1	0	0	1	X	X	X	X	X	1	1	0	1	0
1	0	0	0	1	X	X	X	X	1	1	0	0	0
1	0	0	0	0	1	X	X	X	1	0	1	1	0
1	0	0	0	0	0	1	X	X	1	0	1	0	0
1	0	0	0	0	0	0	1	X	1	0	0	1	0
1	0	0	0	0	0	0	0	1	1	0	0	0	0

1 : HIGH LEVEL
0 : LOW LEVEL
X : DON'T CARE

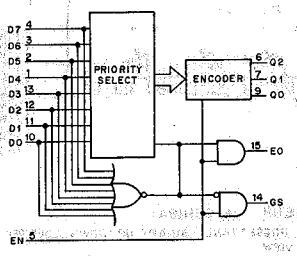

TC5067BP (TOSHIBA)
C-MOS HIGH VOLTAGE BUFFER / INVERTING TYPE
—TOP VIEW—

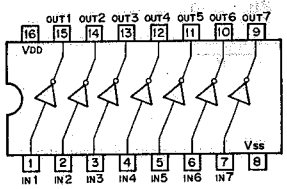

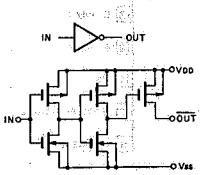

TL084CN
OPERATIONAL AMPLIFIER
(J FET-INPUT)
—TOP VIEW—

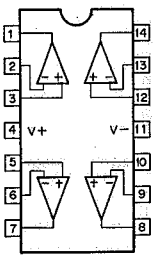

TC4543BP (TOSHIBA)
C-MOS BCD-TO-SEVEN-SEGMENT LATCH / DECODER / DRIVER
—TOP VIEW—

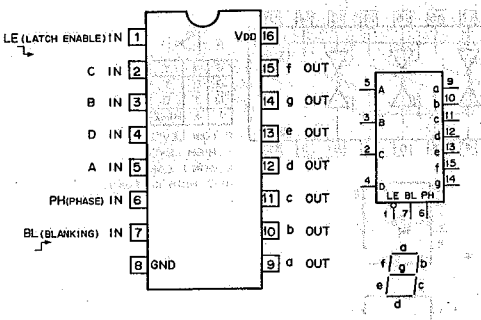

INPUTS						OUTPUTS							DISPLAY
BL	PH*	D	C	B	A	a	b	c	d	e	f	g	
1	0	X	X	X	X	0	0	0	0	0	0	0	BLANK
0	0	0	0	0	0	1	1	1	1	1	1	0	0
0	0	0	0	0	1	0	1	1	0	0	0	0	1
0	0	0	0	1	0	1	1	0	1	1	0	1	2
0	0	0	0	1	1	1	1	1	1	0	0	1	3
0	0	0	1	0	0	0	1	1	0	0	1	1	4
0	0	0	1	0	1	1	0	1	1	0	1	1	5
0	0	0	1	1	0	1	0	1	1	1	1	1	6
0	0	0	1	1	1	1	1	1	0	0	0	0	7
0	0	1	0	0	0	1	1	1	1	1	1	1	8
0	0	1	0	0	1	1	1	1	1	0	1	1	9
**	1	* *				INVERSE OF OUTPUT CONBINATIONS ABOVE							DISPLAY AS ABOVE

0 : LOW LEVEL
1 : HIGH LEVEL
X : DON'T CARE

* = FOR LIQUID CRYSTAL READOUTS, APPLY A SQUARE WAVE TO PH.
FOR COMMON CATHODE LED READOUTS, SELECT PH = 0 (LOW).
FOR COMMON ANODE LED READOUTS, SELECT PH = 1 (HIGH).

* * = ABOVE COMBINATIONS.

TL082CP (TI)
μPC4082C (NEC)
OPERATIONAL AMPLIFIER
(JFET-INPUT)
- TOP VIEW -

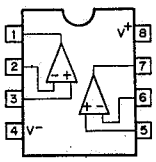

TL601CP (TI)
P-MOS ANALOG SWITCH
- TOP VIEW -

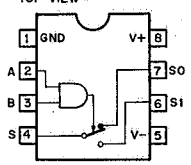

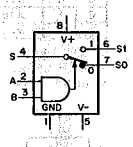

CONT IN		ON CHANNEL
A	B	
0	0	SO
0	1	SO
1	0	SO
1	1	S1

0 ; LOW LEVEL
1 ; HIGH LEVEL

TL607CP (TI)
MOS ANALOG SWITCH
—TOP VIEW—

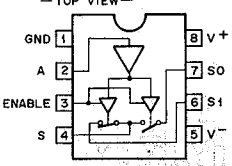

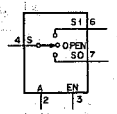

INPUTS		SW
A	EN	
X	0	OPEN
0	1	
1	1	

0 ; LOW LEVEL
1 ; HIGH LEVEL
X ; DON'T CARE

TL8605P (TOSHIBA)
CCD ANALOG PROCESSING UNIT
— TOP VIEW —

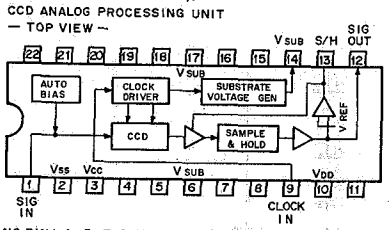

NC PIN; 4, 5, 7, 8, 11, 15, 16, 18, 19, 20, 21, 22

μA760HC(FSC)
HIGH SPEED VOLTAGE COMPARATOR
—TOP VIEW—

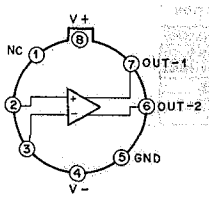

μPC1430□H (NEC)
μPC7800H (NEC)
POSITIVE VOLTAGE REGULATOR (1A)

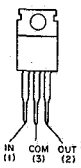

5V	μPC14305H	μPC7805H
6V		
8V	μPC14308H	μPC7808H
8.5V		
12V	μPC14312H	μPC7812H
15V	μPC14315H	μPC7815H
18V	μPC14318H	μPC7818H
24V	μPC14324H	μPC7824H

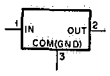

μPC 319C (NEC)
DUAL VOLTAGE COMPARATOR
— TOP VIEW—

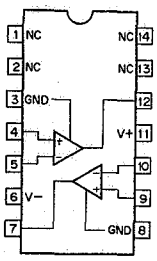

μPC4557C (NEC)
OPERATIONAL AMPLIFIER
(WIDE BAND, LOW NOISE)
—TOP VIEW—

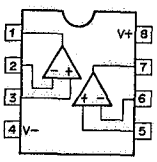

μA796HC (FSC)
DOUBLE-BALANCED MOD/DEMOD
—BOTTOM VIEW—

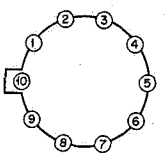

1 +SIGNAL INPUT
2 GAIN ADJUST
3 GAIN ADJUST
4 -SIGNAL INPUT
5 BIAS
6 +OUTPUT
7 +CARRIER INPUT
8 -CARRIER INPUT
9 -OUTPUT
10 V-

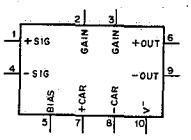

μPC324C (NEC)
QUAD.OP AMPLIFIER
—TOP VIEW—

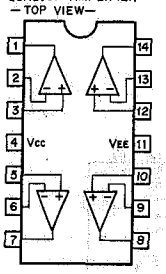

μPC339C (NEC)
COMPARATOR
—TOP VIEW—

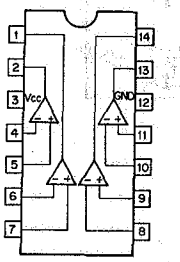

μPC78L□□A (NEC)
POSITIVE VOLTAGE REGULATOR (100mA)

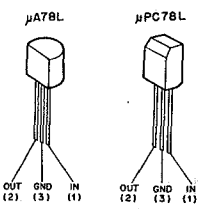

2.6V	
5V	μPC78L05(A)
6.2V	
8V	μPC78L08
8.2V	
9V	
10V	
12V	μPC78L12
15V	μPC78L15
18V	
24V	

SEMICONDUCTOR ELECTRODES

μPC79□□H (NEC)
NEGATIVE VOLTAGE REGULATOR (1A)

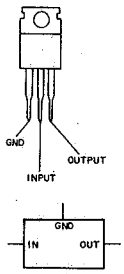

- 5V μPC7905H
- 6V
- 8V μPC7908H
- 12V μPC7912H
- 15V μPC7915H
- 18V μPC7918H
- 24V μPC7924H

μPD5101LC-1 (NEC)
C-MOS 1024-BIT(256X4) STATIC RAM

—TOP VIEW—

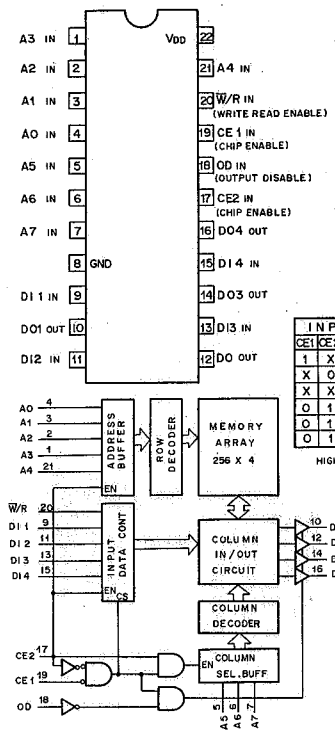

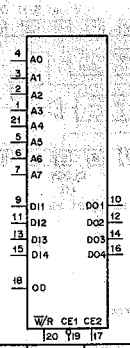

INPUTS				OUTPUTS	FUNCTION
CE1	CE2	OD	WR	DO	
1	X	X	X	HIGH Z	NOT SELECTED
X	0	X	X	HIGH Z	NOT SELECTED
X	X	1	1	HIGH Z	OUTPUT DISABLE
0	1	1	0	HIGH Z	WRITE
0	1	0	0	DI	WRITE
0	1	0	1	DENTERED	READ

HIGH Z; HIGH IMPEDANCE

μPD4519BC (NEC)
C-MOS 4-BIT AND / OR SELECTOR
2-CHANNEL DATA SELECTOR
EXCLUSIVE "NOR" GATE
— TOP VIEW —

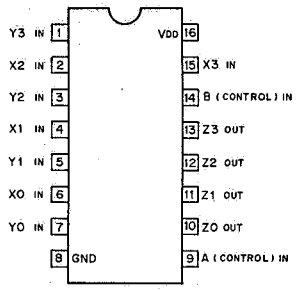

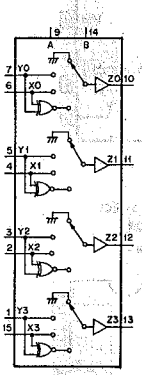

CONTROL		OUTPUT
A	B	Z
0	0	GND
0	1	Y
1	0	X
1	1	Z

μPD4584BC (NEC)
C-MOS SCHMITT TRIGGER INVERTER
—TOP VIEW—

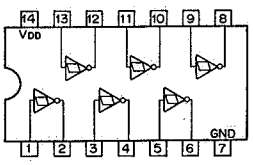

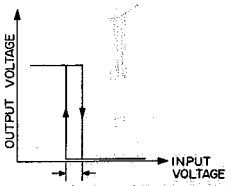

0.4V (VDD=5V)
0.45V(VDD=10V)
0.90V(VDD=15V)

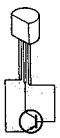
2SA1005
2SA1015
2SA733
2SA844
2SA926

2SA1026
2SA1027R

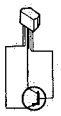
2SA1048
2SA1115

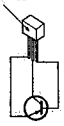

2SA1175

2SA530H

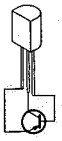
2SA772
2SA773
2SB739
2SB740

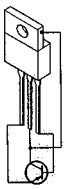
2SB507HP
2SB553
2SB825
2SB857
2SB858

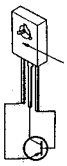

2SB548

2SB733
2SB734

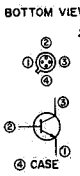

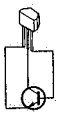
2SC1310
2SC2458
2SC2603
2SC2724
2SC403SP

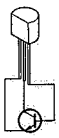
2SC1363
2SC1364
2SC945
JC501

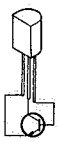
2SC1474
2SC1475
2SD789

2SC1636
2SC403C

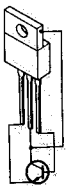
2SC1815
2SC1983
2SD1134
2SD313HP
2SD553
2SD795
2SD880

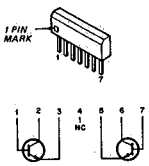

2SC2771

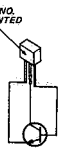

2SC2786

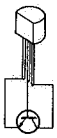
2SC2901

2SC689H

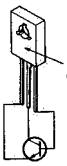

2SD414
2SD882

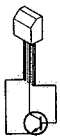
2SD774

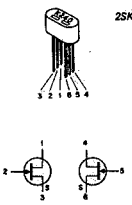
2SK240-BL

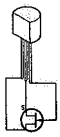
2SK43

TPS601-B

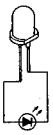
GL-5HD5

LN25RP; RED
LN35BP; GREEN

SE301A

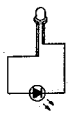
TLO124

TLR321 (TOSHIBA)
DUAL 7-SEGMENT LED
—TOP VIEW—

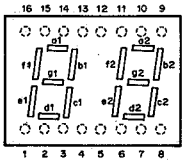

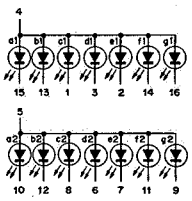

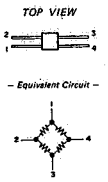

DM-211

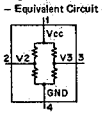

Magneto-Sensing Element
— Equivalent Circuit —

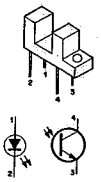
PS4005-L

SECTION 18
PRINTED WIRING BOARD AND SCHEMATIC DIAGRAM

PB-8 (PB RF PREAMPLIFIER)

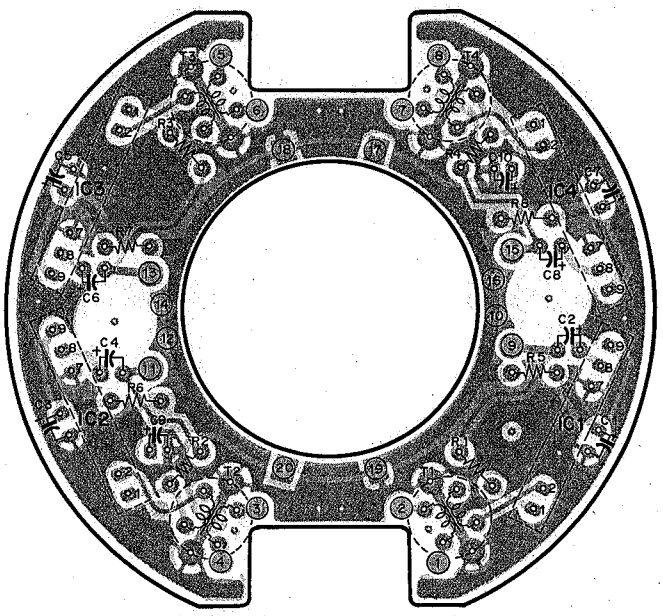

PB-8-SOLDERING SIDE-
1-608-263-12,13
BVW-10
BVW-10P

PB-8 (PB RF PREAMPLIFIER)

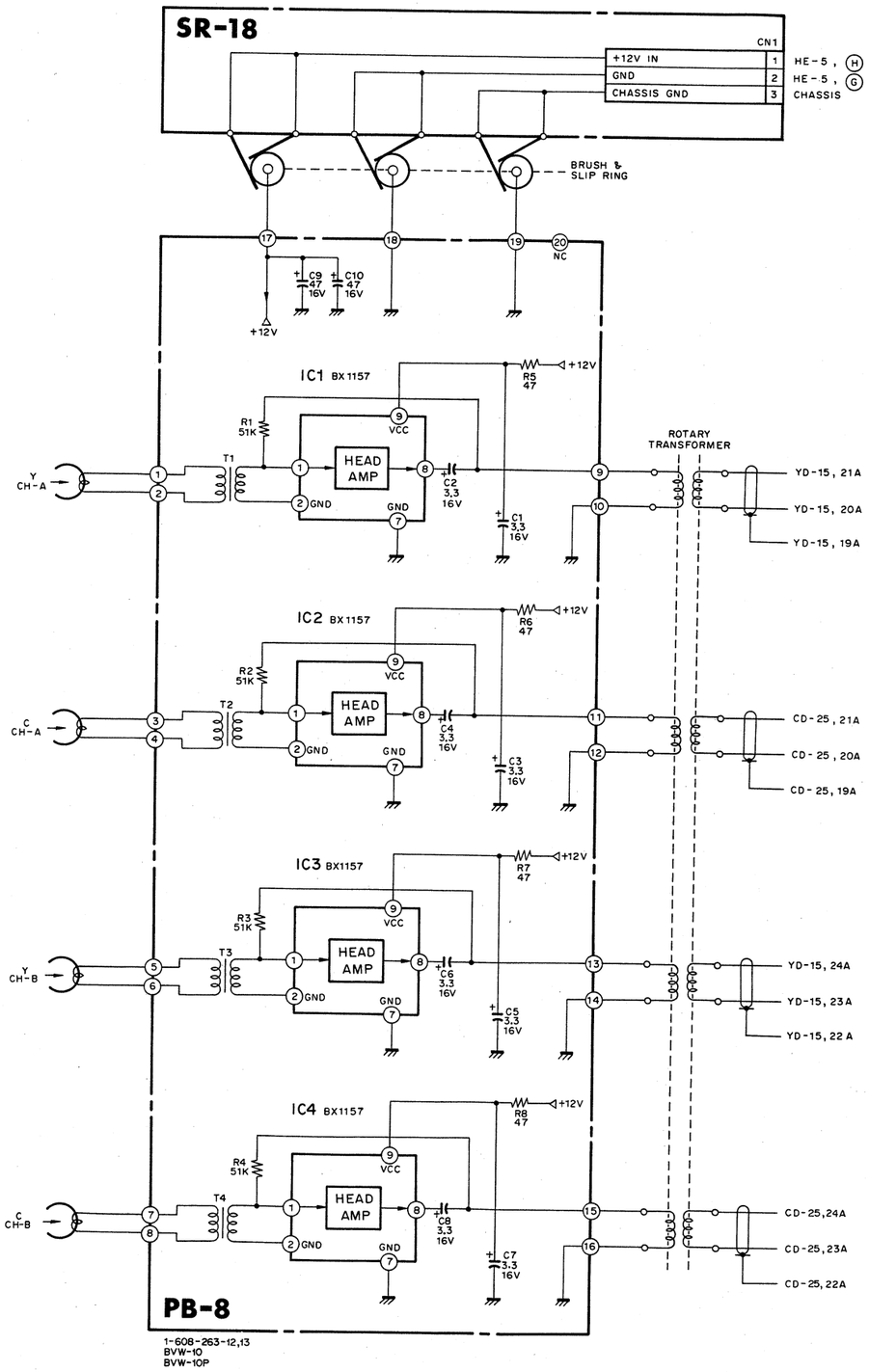

YD-15 (LUMINANCE SIGNAL DEMODULATOR)

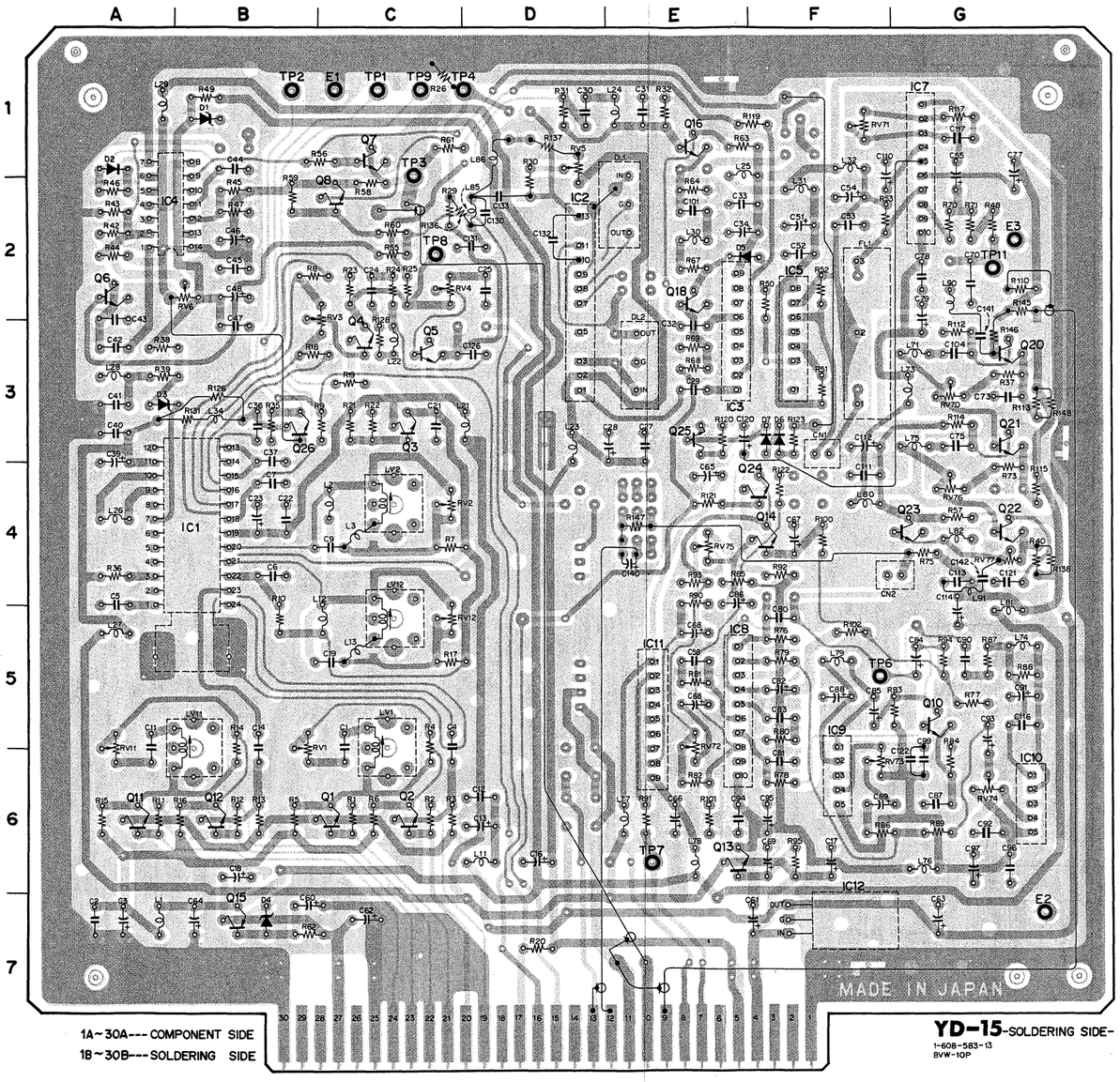

1A~30A---COMPONENT SIDE
1B~30B---SOLDERING SIDE

YD-15-SOLDERING SIDE-
1-608-583-13
BVW-10P

CN1	F-3	Q1	C-6
CN2	G-4	Q2	C-6
		Q3	C-3
D1	B-1	Q4	C-3
D2	A-1	Q5	C-3
D3	A-3	Q6	A-2
D4	B-7	Q7	C-1
D5	E-2	Q8	C-2
D6	F-3	Q10	G-5
D7	F-3	Q11	A-6
		Q12	B-6
DL1	E-2	Q13	E-6
DL2	E-3	Q14	F-4
		Q15	B-7
E1	C-1	Q16	E-1
E2	G-7	Q18	E-2
E3	G-2	Q20	G-3
		Q21	G-3
FL1	F-3	Q22	G-4
		Q23	G-4
IC1	B-4	Q24	F-4
IC2	D-2	Q25	E-3
IC3	E-3	Q26	B-3
IC4	A-2		
IC5	F-3	RV1	B-5
IC7	G-1	RV2	C-4
IC8	E-5	RV3	C-2
IC9	F-6	RV4	C-2
IC10	G-6	RV5	D-1
IC11	E-5	RV6	B-2
IC12	F-7	RV11	A-5
		RV12	C-5
LV1	C-5	RV70	G-3
LV2	C-4	RV71	F-1
LV11	B-5	RV72	E-5
LV12	C-5	RV73	F-6
		RV74	G-6
		RV75	E-4
		RV76	G-4
		RV77	G-4
		TP1	C-1
		TP2	B-1
		TP3	C-1
		TP4	D-1
		TP6	F-5
		TP7	E-6
		TP8	C-2
		TP9	C-1
		TP11	G-2

YD-15 (LUMINANCE SIGNAL DEMODULATOR)

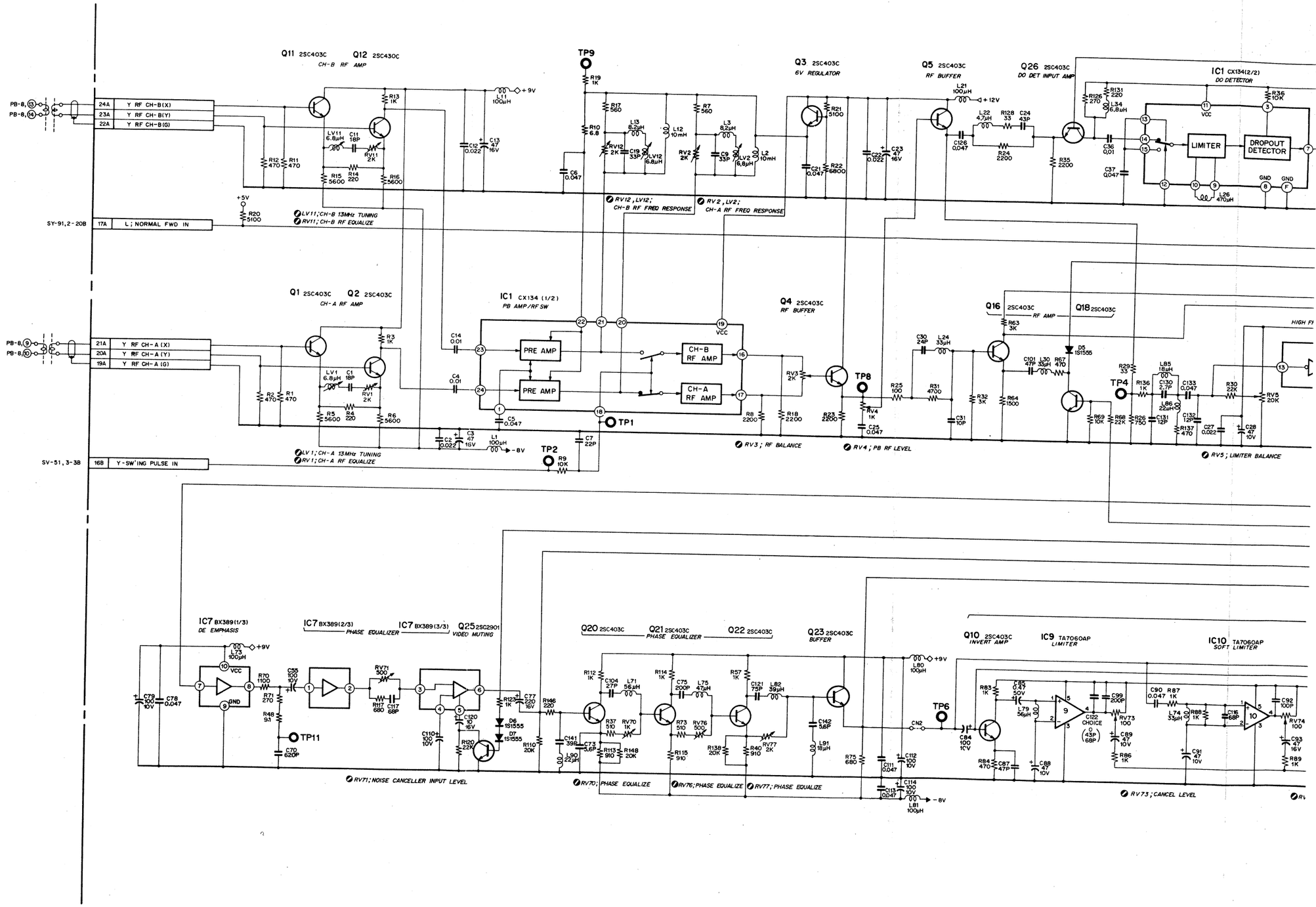

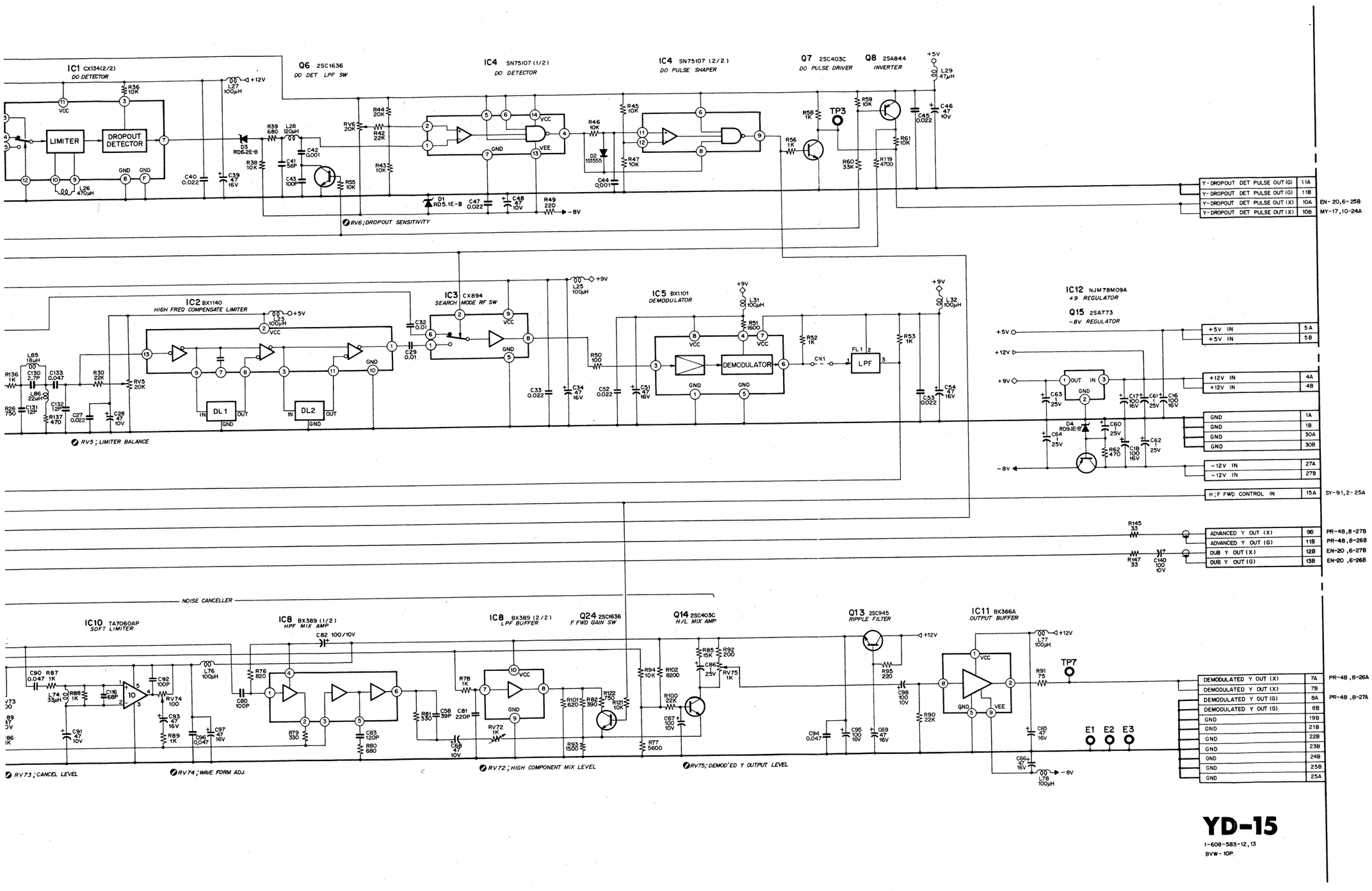

YD-15

1-608-583-12,13
BVW-10P

D-25 (CHROMINANCE SIGNAL DEMODULATOR)

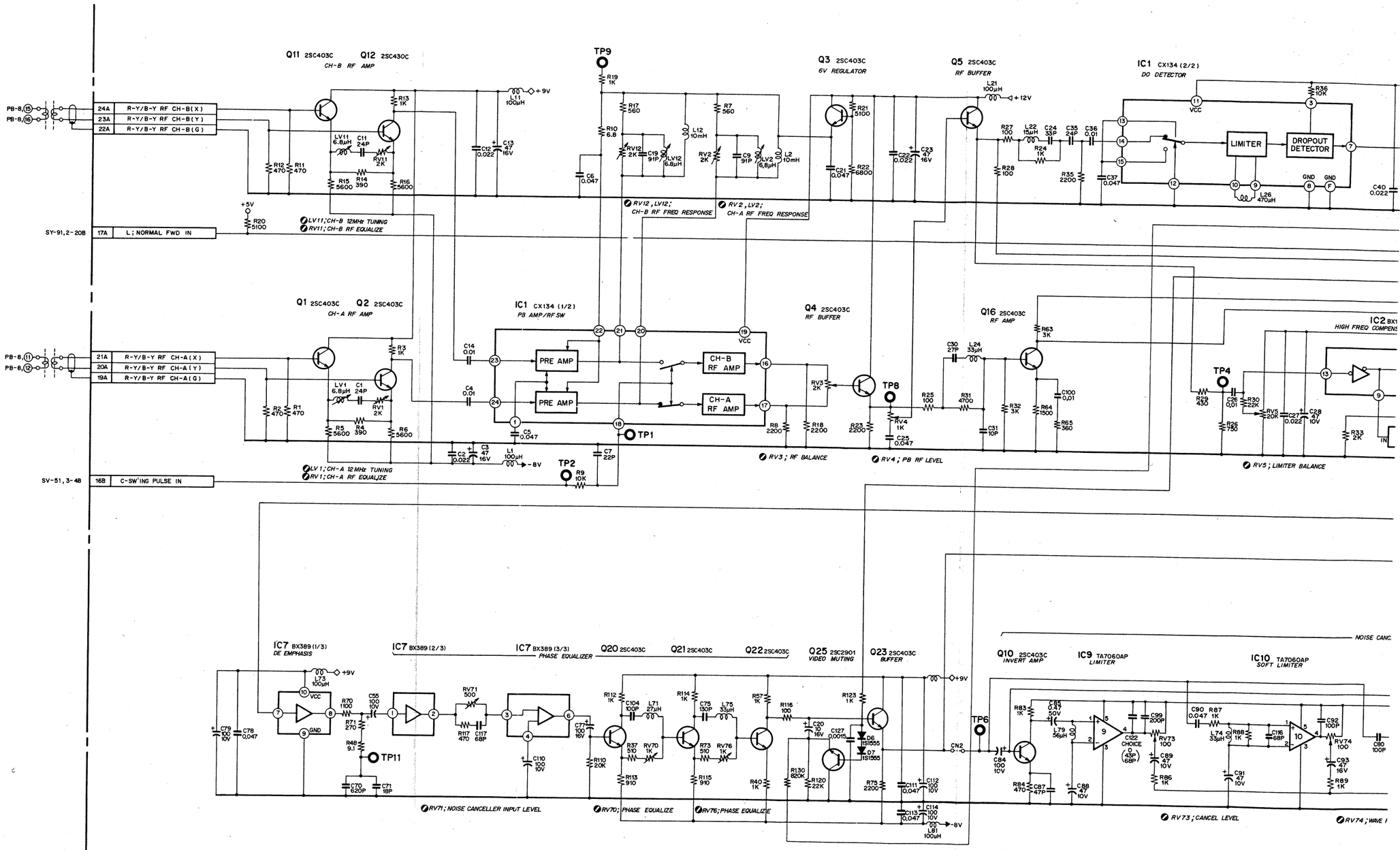

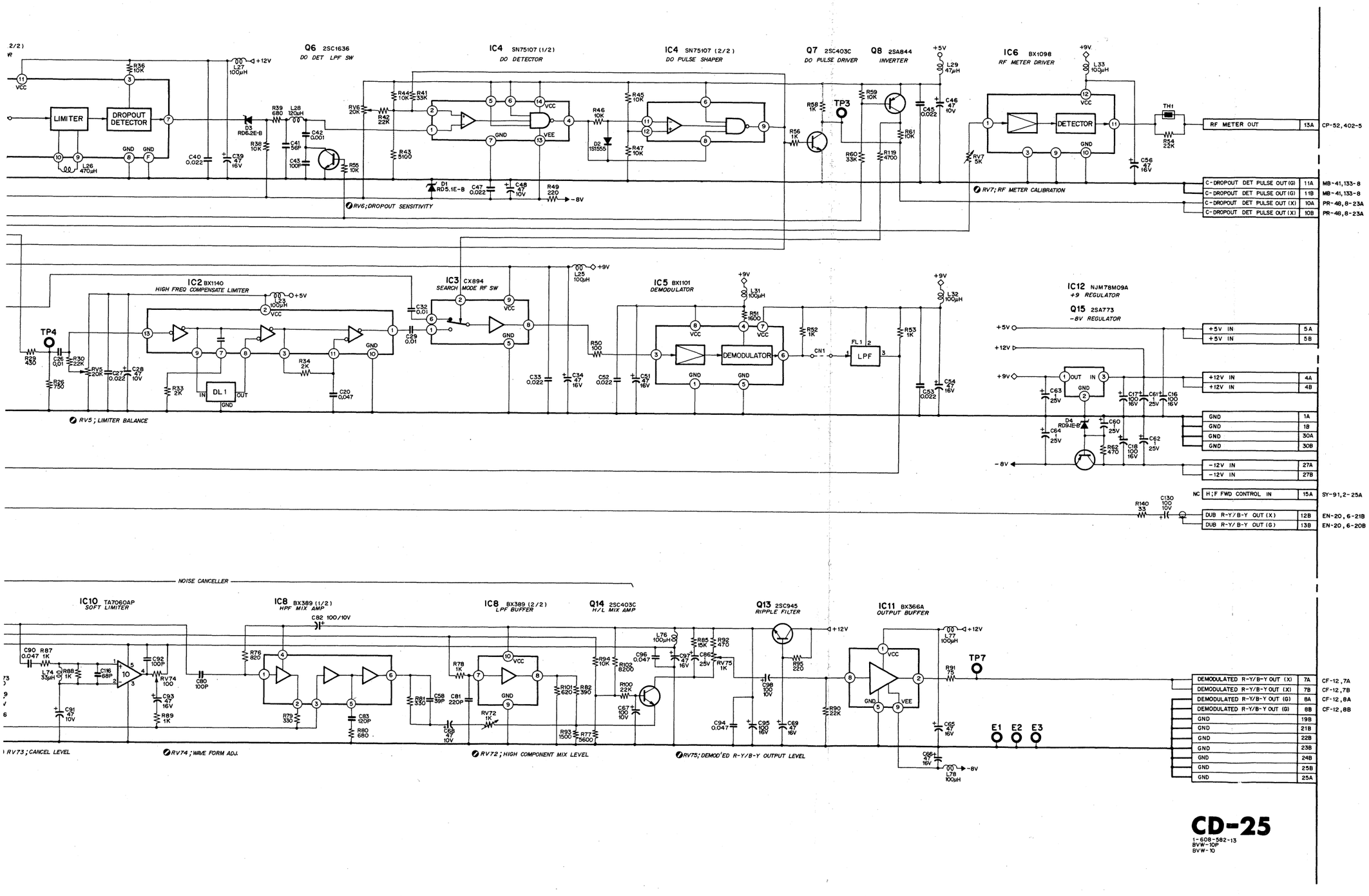

CD-25

1-608-582-13
BVW-10P
BVW-10

CD-25 (CHROMINANCE SIGNAL DEMODULATOR)

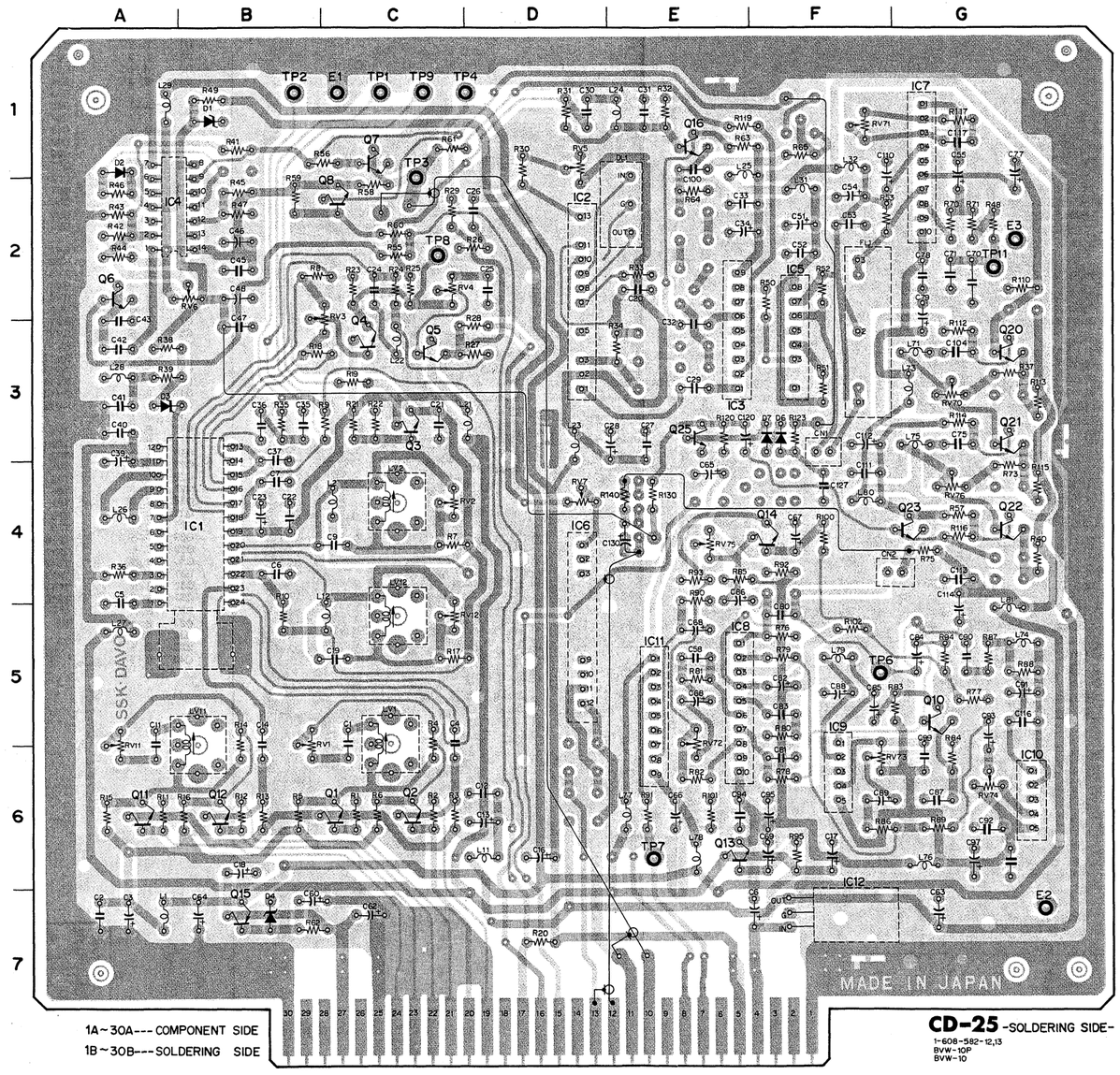

1A~30A---COMPONENT SIDE
1B~30B---SOLDERING SIDE

CD-25 -SOLDERING SIDE-
1-608-582-12,13
BVW-10P
BVW-10

CN1	F · 3	Q1	C · 6
CN2	G · 4	Q2	C · 6
		Q3	C · 3
D1	B · 1	Q4	C · 3
D2	A · 1	Q5	C · 3
D3	A · 3	Q6	A · 2
D4	B · 7	Q7	C · 1
D6	F · 3	Q8	C · 2
D7	F · 3	Q10	G · 5
		Q11	A · 6
DL1	E · 2	Q12	B · 6
		Q13	E · 6
E1	C · 1	Q14	F · 4
E2	G · 7	Q15	B · 7
E3	G · 2	Q16	E · 1
		Q20	G · 3
FL1	F · 3	Q21	G · 3
		Q22	G · 4
IC1	B · 4	Q23	G · 4
IC2	D · 2	Q25	E · 3
IC3	E · 3		
IC4	A · 2	RV1	B · 5
IC5	F · 3	RV2	C · 4
IC6	D · 4	RV3	C · 2
IC7	G · 1	RV4	C · 2
IC8	E · 5	RV5	D · 1
IC9	F · 6	RV6	B · 2
IC10	G · 6	RV7	D · 4
IC11	E · 5	RV11	A · 5
IC12	F · 7	RV12	C · 5
		RV70	G · 3
LV1	C · 5	RV71	F · 1
LV2	C · 4	RV72	E · 5
LV11	B · 5	RV73	F · 6
LV12	C · 5	RV74	G · 6
		RV75	E · 4
		RV76	G · 4
		TP1	C · 1
		TP2	B · 1
		TP3	C · 1
		TP4	D · 1
		TP6	F · 5
		TP7	E · 6
		TP8	C · 2
		TP9	C · 1
		TP11	G · 2

CF-12 (CHROMINANCE SIGNAL COMB FILTER)
DU-43

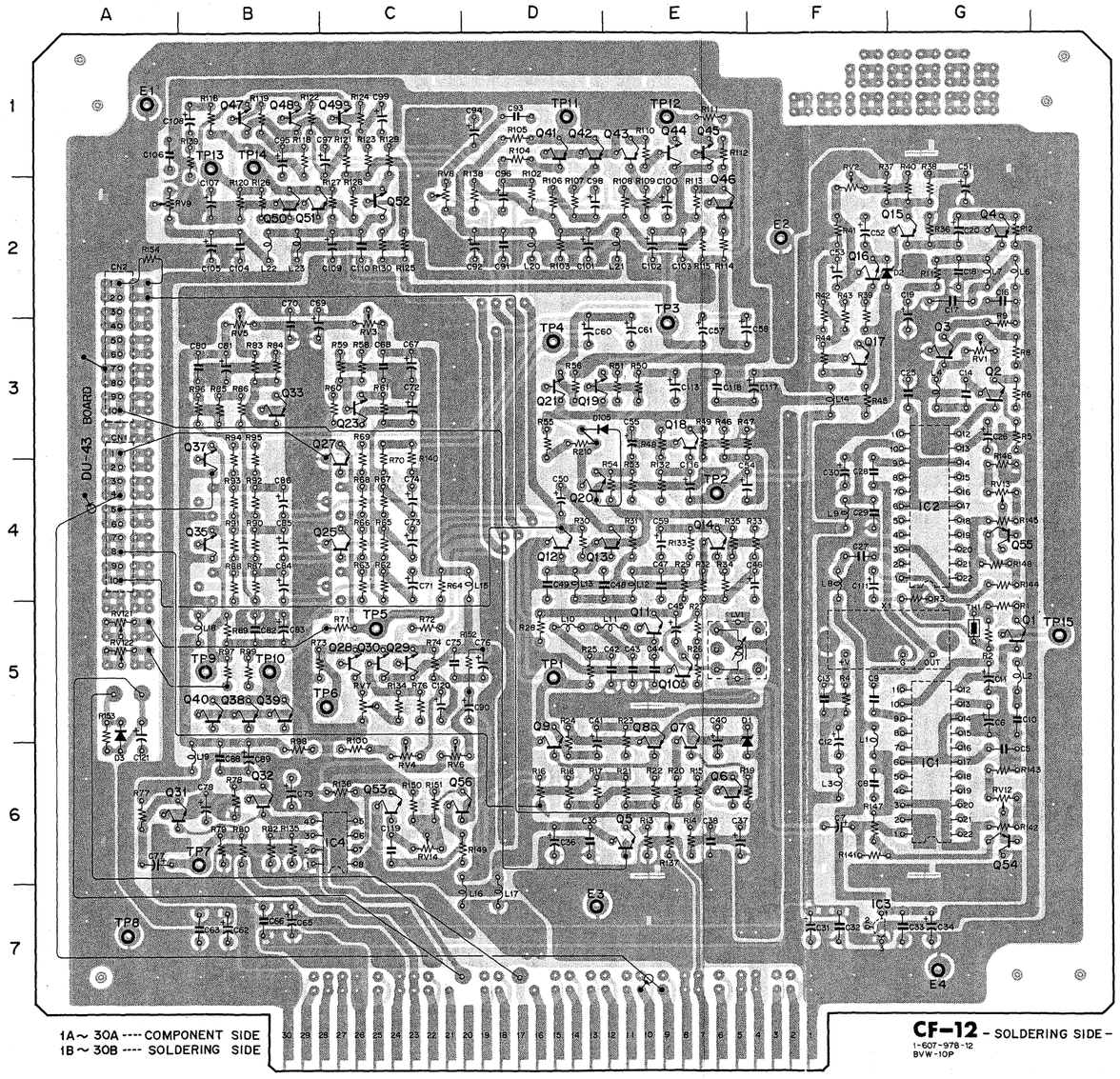

CF-12 - SOLDERING SIDE -
1-607-978-12
BVW-10P

D1	F - 6	Q41	D - 1
D2	G - 2	Q42	D - 1
D3	A - 5	Q43	E - 1
D105	E - 3	Q44	E - 1
		Q45	E - 1
E1	A - 1	Q46	E - 2
E2	F - 2	Q47	B - 1
E3	D - 7	Q48	B - 1
E4	G - 7	Q49	C - 1
		Q50	B - 2
IC1	G - 6	Q51	B - 2
IC2	G - 4	Q52	C - 2
IC3	F - 7	Q53	C - 6
IC4	C - 6	Q54	G - 6
		Q55	G - 4
LV1	E - 5	Q56	D - 6
Q1	G - 5	RV1	G - 3
Q2	G - 3	RV2	F - 2
Q3	G - 3	RV3	C - 3
Q4	G - 2	RV4	C - 6
Q5	E - 6	RV5	B - 3
Q6	E - 6	RV6	C - 6
Q7	E - 6	RV7	C - 5
Q8	E - 6	RV8	C - 2
Q9	D - 6	RV9	A - 2
Q10	E - 5	RV12	G - 6
Q11	E - 5	RV13	G - 4
Q12	D - 4	RV14	C - 6
Q13	E - 4	RV121	A - 5
Q14	E - 4	RV122	A - 5
Q15	G - 2		
Q16	F - 2	TP1	D - 5
Q17	F - 3	TP2	E - 4
Q18	E - 3	TP3	E - 3
Q19	D - 3	TP4	D - 3
Q20	D - 4	TP5	C - 5
Q21	D - 3	TP6	C - 5
Q23	C - 3	TP7	B - 6
Q25	C - 4	TP8	A - 7
Q27	C - 4	TP9	B - 5
Q28	C - 5	TP10	B - 5
Q29	C - 5	TP11	D - 1
Q30	C - 5	TP12	E - 1
Q31	B - 6	TP13	B - 1
Q32	B - 6	TP14	B - 1
Q33	B - 3	TP15	G - 5
Q35	B - 4		
Q37	B - 4	X1	G - 5
Q38	B - 5		
Q39	B - 5		
Q40	B - 5		

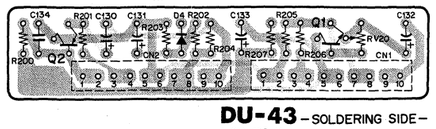

DU-43 - SOLDERING SIDE -
1-610-457-11
BVW-10
BVW-10P

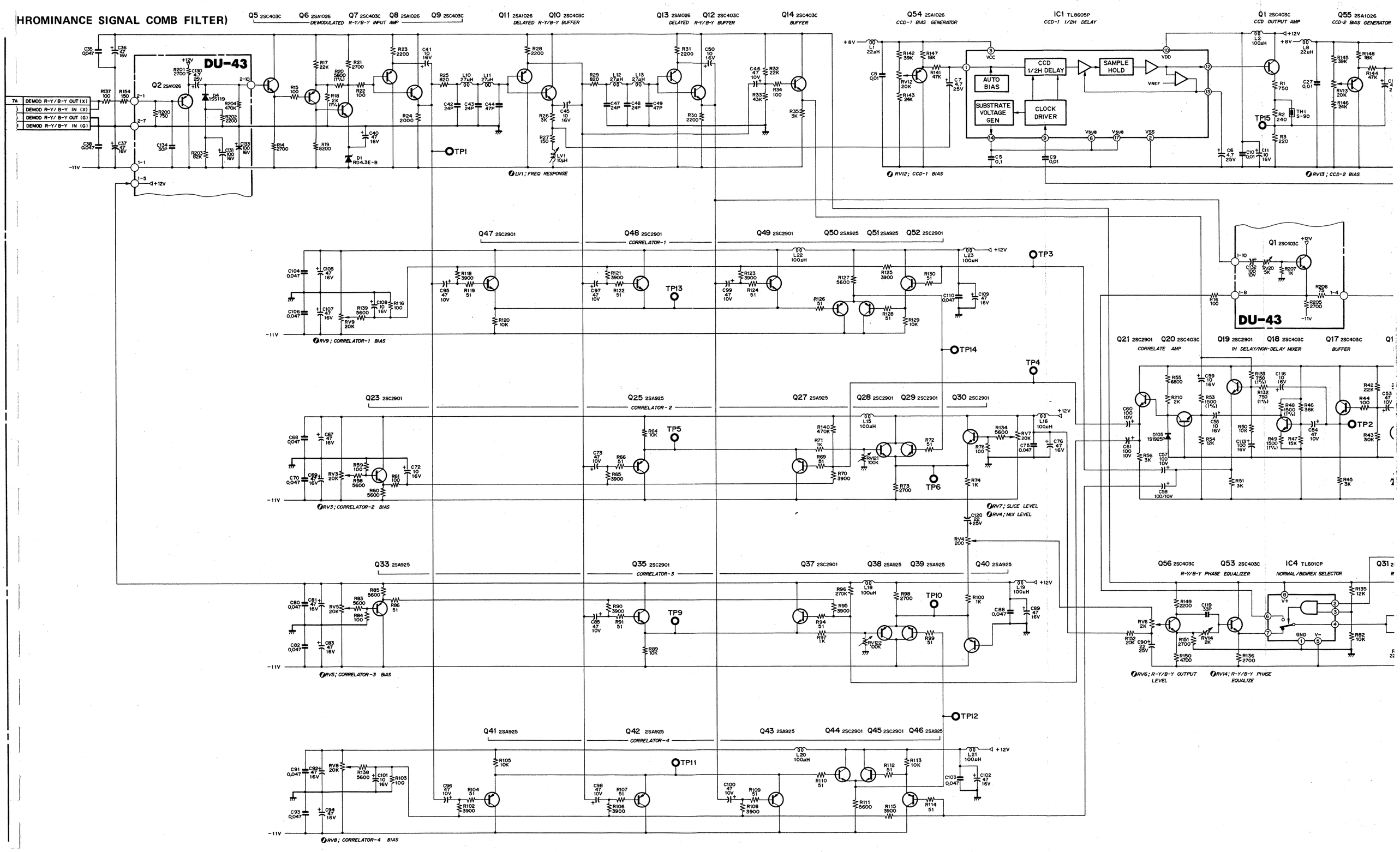
HROMINANCE SIGNAL COMB FILTER)
DU-43
DEMOD R-Y/B-Y OUT (X)
DEMOD R-Y/B-Y IN (X)
DEMOD R-Y/B-Y OUT (G)
DEMOD R-Y/B-Y IN (G)
Q5 2SC403C Q6 2SA1026 Q7 2SC403C Q8 2SA1026 Q9 2SC403C
DEMODULATED R-Y/B-Y INPUT AMP
Q11 2SA1026 Q10 2SC403C
DELAYED R-Y/B-Y BUFFER
Q13 2SA1026 Q12 2SC403C
DELAYED R-Y/B-Y BUFFER
Q14 2SC403C
BUFFER
Q54 2SA1026
CCD-1 BIAS GENERATOR
IC1 TL8605P
CCD-1 1/2H DELAY
Q1 2SC403C
CCD OUTPUT AMP
Q55 2SA1026
CCD-2 BIAS GENERATOR
AUTO BIAS
CCD 1/2H DELAY
SAMPLE HOLD
SUBSTRATE VOLTAGE GEN
CLOCK DRIVER
LV1; FREQ RESPONSE
RV12; CCD-1 BIAS
RV13; CCD-2 BIAS
Q47 2SC2901 Q48 2SC2901 Q49 2SC2901 Q50 2SA925 Q51 2SA925 Q52 2SC2901
CORRELATOR-1
RV9; CORRELATOR-1 BIAS
Q21 2SC2901 Q20 2SC403C Q19 2SC2901 Q18 2SC403C Q17 2SC403C
CORRELATE AMP
1H DELAY/NON-DELAY MIXER
BUFFER
Q23 2SC2901 Q25 2SA925 Q27 2SA925 Q28 2SC2901 Q29 2SC2901 Q30 2SC2901
CORRELATOR-2
RV3; CORRELATOR-2 BIAS
RV7; SLICE LEVEL
RV4; MIX LEVEL
Q33 2SA925 Q35 2SC2901 Q37 2SC2901 Q38 2SA925 Q39 2SA925 Q40 2SA925
CORRELATOR-3
RV5; CORRELATOR-3 BIAS
Q56 2SC403C Q53 2SC403C IC4 TL601CP
R-Y/B-Y PHASE EQUALIZER
NORMAL/BIDIREX SELECTOR
RV6; R-Y/B-Y OUTPUT LEVEL
RV14; R-Y/B-Y PHASE EQUALIZE
Q41 2SA925 Q42 2SA925 Q43 2SA925 Q44 2SC2901 Q45 2SC2901 Q46 2SA925
CORRELATOR-4
RV8; CORRELATOR-4 BIAS
TP1 TP2 TP3 TP4 TP5 TP6 TP9 TP10 TP11 TP12 TP13 TP14 TP15

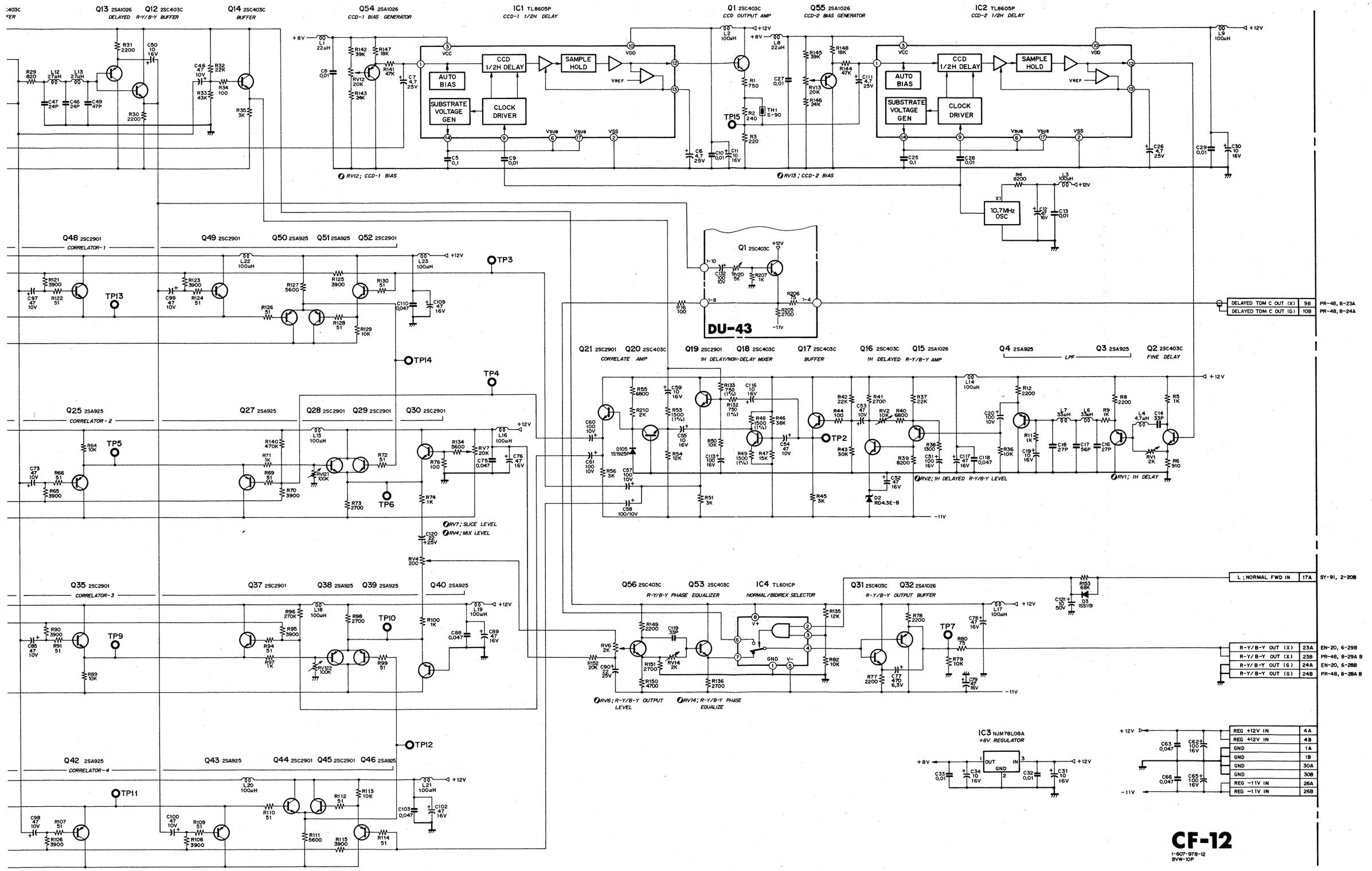
Q13 2SA1026 DELAYED
Q12 2SC403C R-Y/B-Y BUFFER
Q14 2SC403C BUFFER
Q54 2SA1026 CCD-1 BIAS GENERATOR
IC1 TL8605P CCD-1 1/2H DELAY
Q1 2SC403C CCD OUTPUT AMP
Q55 2SA1026 CCD-2 BIAS GENERATOR
IC2 TL8605P CCD-2 1/2H DELAY
AUTO BIAS
CCD 1/2H DELAY
SAMPLE HOLD
SUBSTRATE VOLTAGE GEN
CLOCK DRIVER
RV12; CCD-1 BIAS
RV13; CCD-2 BIAS
10.7MHz OSC
Q48 2SC2901 CORRELATOR-1
Q49 2SC2901
Q50 2SA925
Q51 2SA925
Q52 2SC2901
DU-43
Q21 2SC2901 CORRELATE AMP
Q20 2SC403C
Q19 2SC2901 1H DELAY/NON-DELAY MIXER
Q18 2SC403C
Q17 2SC403C BUFFER
Q16 2SC403C 1H DELAYED R-Y/B-Y AMP
Q15 2SA1026
Q4 2SA925 LPF
Q3 2SA925
Q2 2SC403C FINE DELAY
RV2; 1H DELAYED R-Y/B-Y LEVEL
RV1; 1H DELAY
Q25 2SA925 CORRELATOR-2
Q27 2SA925
Q28 2SC2901
Q29 2SC2901
Q30 2SC2901
RV7; SLICE LEVEL
RV4; MIX LEVEL
Q35 2SC2901 CORRELATOR-3
Q37 2SC2901
Q38 2SA925
Q39 2SA925
Q40 2SA925
Q56 2SC403C R-Y/B-Y PHASE EQUALIZER
Q53 2SC403C
IC4 TL601CP NORMAL/BIDIREX SELECTOR
Q31 2SC403C
Q32 2SA1026 R-Y/B-Y OUTPUT BUFFER
RV6; R-Y/B-Y OUTPUT LEVEL
RV14; R-Y/B-Y PHASE EQUALIZE
Q42 2SA925 CORRELATOR-4
Q43 2SA925
Q44 2SC2901
Q45 2SC2901
Q46 2SA925
IC3 NJM78L08A +8V REGULATOR
DELAYED TDM C OUT (X) 98 PR-48, 8-23A
DELAYED TDM C OUT (G) 108 PR-48, 8-24A
L; NORMAL FWD IN 17A SY-91, 2-20B
R-Y/B-Y OUT (X) 23A EN-20, 6-29B
R-Y/B-Y OUT (X) 23B PR-48, 8-29A B
R-Y/B-Y OUT (G) 24A EN-20, 6-28B
R-Y/B-Y OUT (G) 24B PR-48, 8-28A B
REG +12V IN 4A
REG +12V IN 4B
GND 1A
GND 1B
GND 30A
GND 30B
REG -11V IN 26A
REG -11V IN 26B
CF-12
1-607-978-12
8VW-10P

CK-14 (VIDEO TBC)

Ref. No.	Type	Pin No. −11V	−5V	GND	+5V	+11V
IC1	SN74LS74AN			7	14	
IC 1B	SN74LS423N			8	16	
IC 1C	SN74LS74AN			7	14	
IC 1D	SN74LS00N			7	14	
IC 1E	SN74LS11N			7	14	
IC 1F	HA1-4905-5	5		9	1	13
IC 1GA	TL601CP	5		1		8
IC 1GB	TL601CP	5		1		8
IC 1HA	TL601CP	5		1		8
IC 1HB	TL601CP	5		1		8
IC 1I	SN74LS123N			8	16	
IC 1J	SN7406N			7	14	
IC 1K	μPC319C	6		3,8		11
IC 1L	SN74LS74AN			7	14	
IC 1M	SN74LS00N			7	14	
IC 1N	SN74LS11N			7	14	
IC 1P	HA1-4905-5	5		9	1	13
IC 1RA	TL601CP	5		1		8
IC 1RB	TL601CP	5		1		8
IC 1SA	TL601CP	5		1		8
IC 1SB	TL601CP	5		1		8
IC 1T	CX773A			12	24	
IC 1U	HD10125		8	16	9	
IC 1V	SN74LS00N			7	14	
IC 1X	CX7903				2	
IC 1Y	μPC319C	6		3,8		11
IC 2A	HD10124		8	16	9	
IC 2B	SN74LS221N			8	16	
IC 2C	SN74LS163AN			8	16	
IC 2D	SN74LS221N			8	16	
IC 2E	SN74LS112AN			8	16	
IC 2G	TL082CP	4				8
IC 2H	TL084CN	11				4
IC 2J	HD10124		8	16	9	
IC 2K	SN74LS221N			8	16	
IC 2L	SN74LS163AN			8	16	
IC 2M	SN74LS221N			8	16	
IC 2N	SN74LS112AN			8	16	
IC 2R	TL082CP	4				8
IC 2S	TL084CN	11				4
IC 2T	SN74365AN			8	16	
IC 2U	SN7404N			7	14	
IC 2V	SN75207BN		13	7	14	
IC 2W	SN7406N			7	14	
IC 3A	HD10198L		8	1,16		
IC 3B	SN74LS163AN			8	16	
IC 3C	SN7400N			7	14	
IC 3D	SN74LS164N			7	14	
IC 3E	SN74LS08N			7	14	
IC 3F	HI1-201-5	4		5		13
IC 3G	BX381	9		6		2
IC 3H	HI1-201-5	4		5		13
IC 3J	HD10198L		8	1,16		
IC 3K	SN74LS163AN			8	16	
IC 3L	SN7400N			7	14	
IC 3M	SN74LS164N			7	14	
IC 3N	SN74LS08N			7	14	
IC 3P	HI1-201-5	4		5		13
IC 3R	BX381	9		6		2
IC 3S	HI1-201-5	4		5		13
IC 3T	SN74LS164N			7	14	
IC 3U	SN74LS164N			7	14	
IC 3V	SN74LS221N			8	16	
IC 3W	SN74265N			8	16	
IC 3X	BX381	9		6		2
IC 4A	MC10198L		8	1,16		
IC 4B	SN74S163N			8	16	
IC 4C	SN74LS74AN			7	14	
IC 4D	SN74LS123N			8	16	
IC 4E	SN74LS04N			7	14	
IC 4F	μPC4557C	4				8
IC 4G	NJM4560D	4				8
IC 4H	SN75207BN		13	7	14	
IC 4J	MC10198L		8	1,16		
IC 4K	SN74S163N			8	16	
IC 4L	SN74LS74AN			7	14	
IC 4M	SN74LS123N			8	16	
IC 4N	SN74LS04N			7	14	
IC 4P	μPC4557C	4				8
IC 4R	NJM4560D	4				8
IC 4S	SN75207BN		13	7	14	
IC 4T	SN74LS164N			7	14	
IC 4U	SN74LS00N			7	14	
IC 4V	SN7404N			7	14	
IC 4W	SN74LS163AN			8	16	
IC 4Z	SN74LS164N			7	14	
IC 5A	HD10125		8	16	9	
IC 5B	SN74191N			8	16	
IC 5C	SN74LS174N			8	16	
IC 5D	SN74S51N			7	14	
IC 5E	SN74LS221N			8	16	
IC 5F	SN74LS221N			8	16	
IC 5G	SN75452BP			4	8	
IC 5H	μPC319C	6		3,8		11
IC 5J	HD10125		8	16	9	
IC 5K	SN74191N			8	16	
IC 5L	SN74LS174N			8	16	
IC 5M	SN74S51N			7	14	
IC 5N	SN74LS221N			8	16	
IC 5P	SN74LS221N			8	16	
IC 5R	SN75452BP			4	8	
IC 5S	μPC319C	6		3,8		11
IC 5T	SN74LS164N			7	14	
IC 5U	SN74S51N			7	14	
IC 5V	SN74LS221N			8	16	
IC 5W	SN74LS163AN			8	16	
IC 5X	SN74S163N			8	16	
IC 5Z	SN74LS221N			8	16	

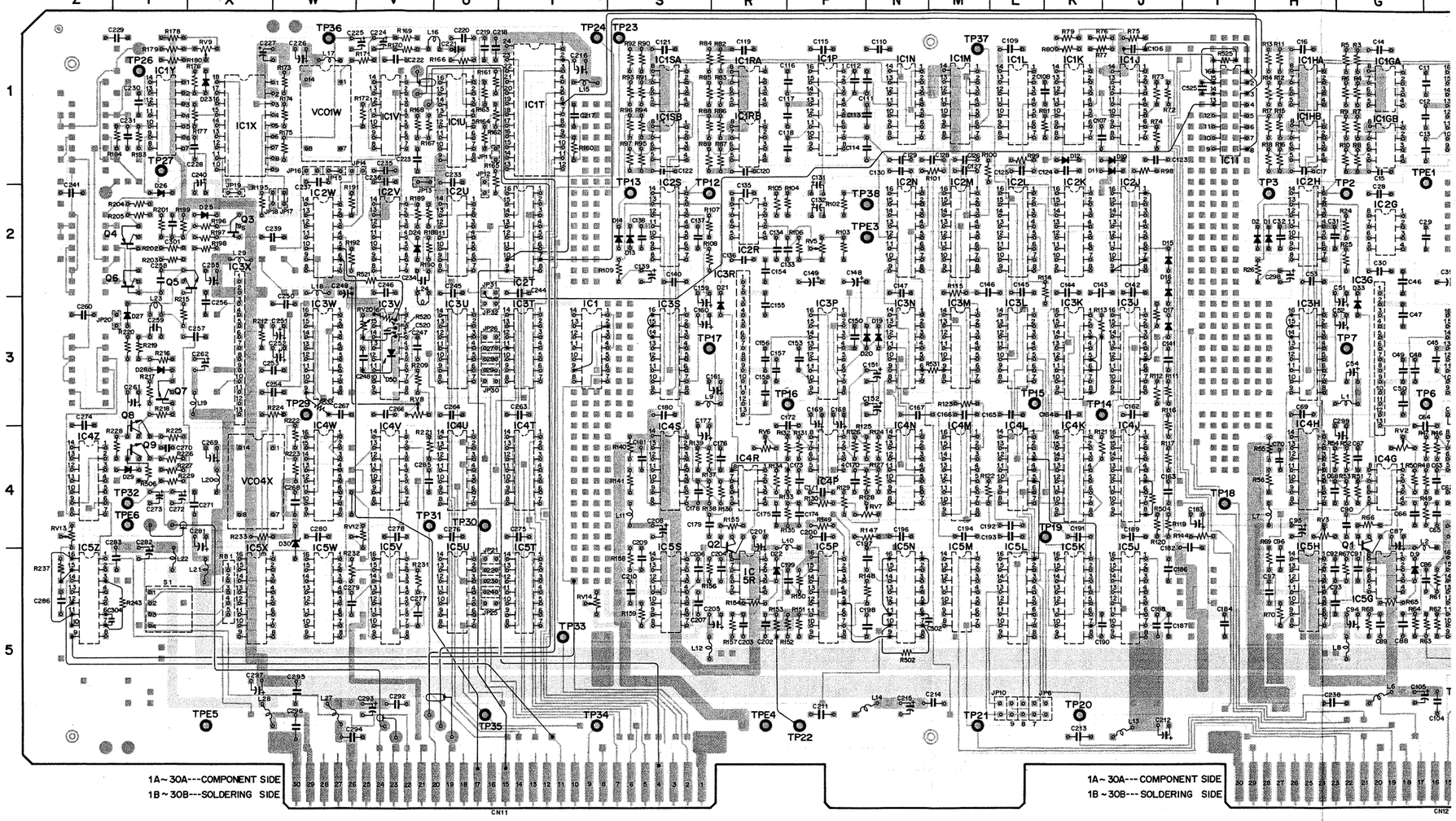

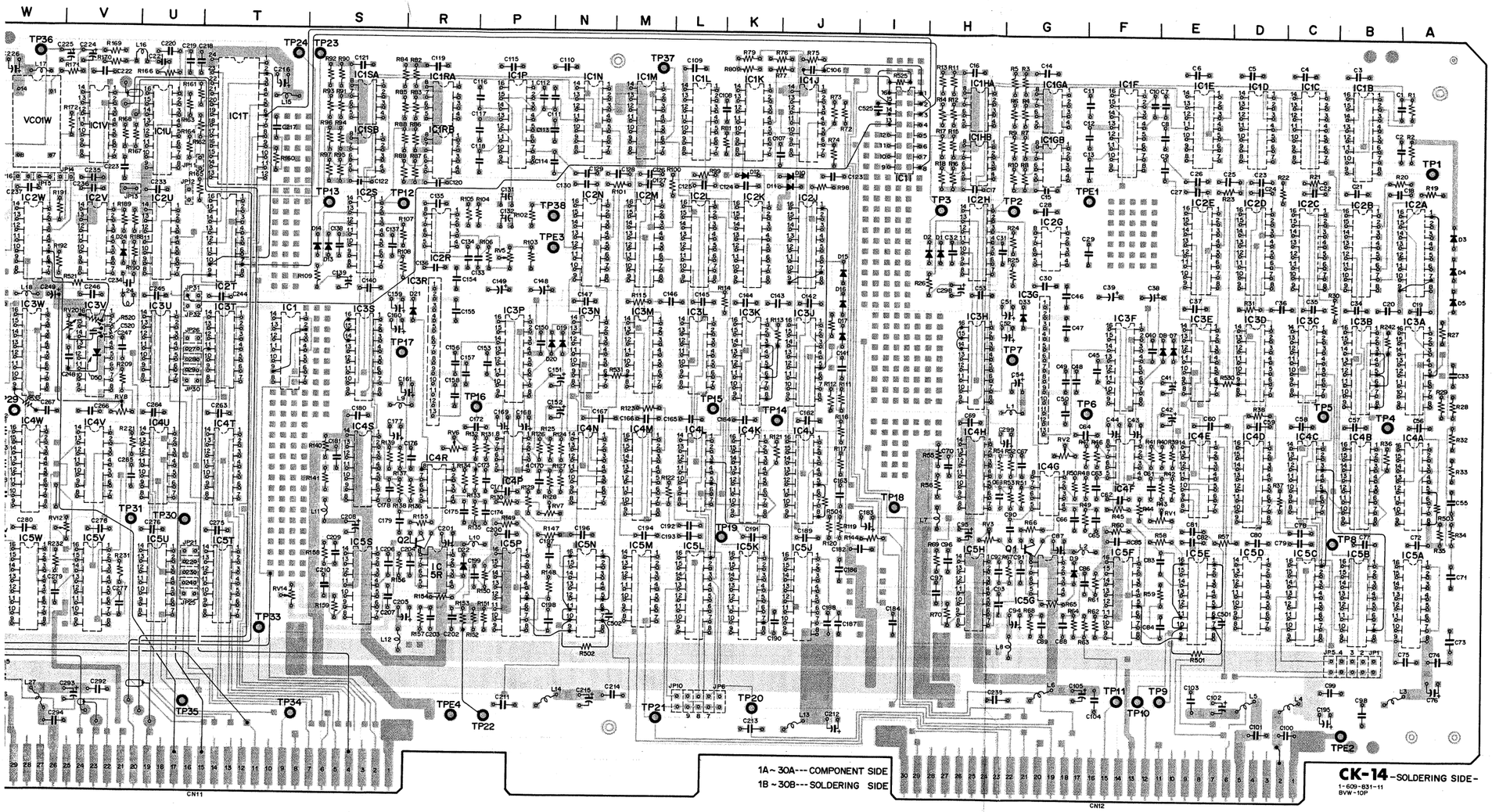

D1	H-2	TP1	A-1
D2	H-2	TP2	G-2
D3	A-2	TP3	H-2
D4	A-2	TP4	B-3
D5	A-2	TP5	C-3
D7	E-3	TP6	F-3
D8	E-3	TP7	G-3
D9	G-5	TP8	C-4
D10	J-1	TP9	E-5
D11	J-1	TP10	F-5
D12	K-1	TP11	F-5
D13	S-2	TP12	R-2
D14	S-2	TP13	S-2
D15	J-2	TP14	K-3
D16	J-2	TP15	L-3
D17	J-3	TP16	P-3
D19	N-3	TP17	S-3
D20	N-3	TP18	I-4
D21	R-3	TP19	K-4
D22	R-5	TP20	K-5
D23	X-1	TP21	M-5
D24	V-2	TP22	P-5
D25	X-2	TP23	S-1
D26	Y-2	TP24	T-1
D27	Y-3	TP26	Y-1
D28	Y-3	TP27	Y-1
D29	Y-4	TP29	W-3
D30	W-4	TP30	U-4
D33	G-3	TP31	V-4
D50	V-3	TP32	Y-4
		TP33	T-5
IC1	T-3	TP34	T-5
		TP35	U-5
Q1	G-4	TP36	W-1
Q2	R-4	TP37	M-1
Q3	X-2	TP38	N-2
Q4	Y-2		
Q5	Y-2	TPE1	F-1
Q6	Y-2	TPE2	B-5
Q7	Y-3	TPE3	N-2
Q8	Y-3	TPE4	R-5
Q9	Y-4	TPE5	X-5
		TPE6	Y-4
RV1	E-4		
RV2	G-4		
RV3	H-4		
RV5	P-2		
RV6	R-4		
RV7	N-4		
RV8	V-3		
RV9	X-1		
RV12	W-4		
RV13	Z-4		
RV14	T-5		
RV20	V-3		

4 /3) (VIDEO TBC)

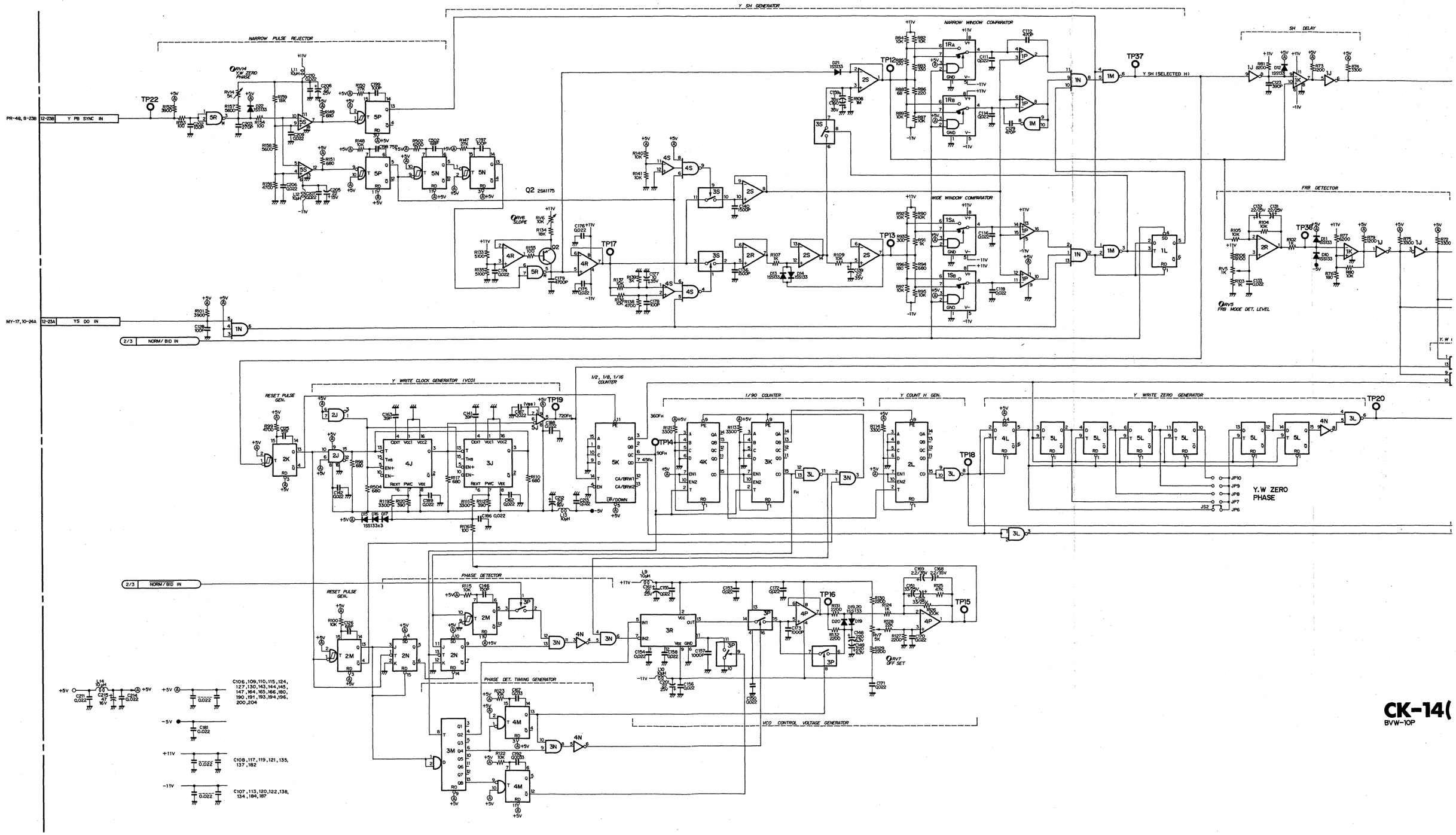

CK-14(
BVW-10P

CK-14 (1/3)

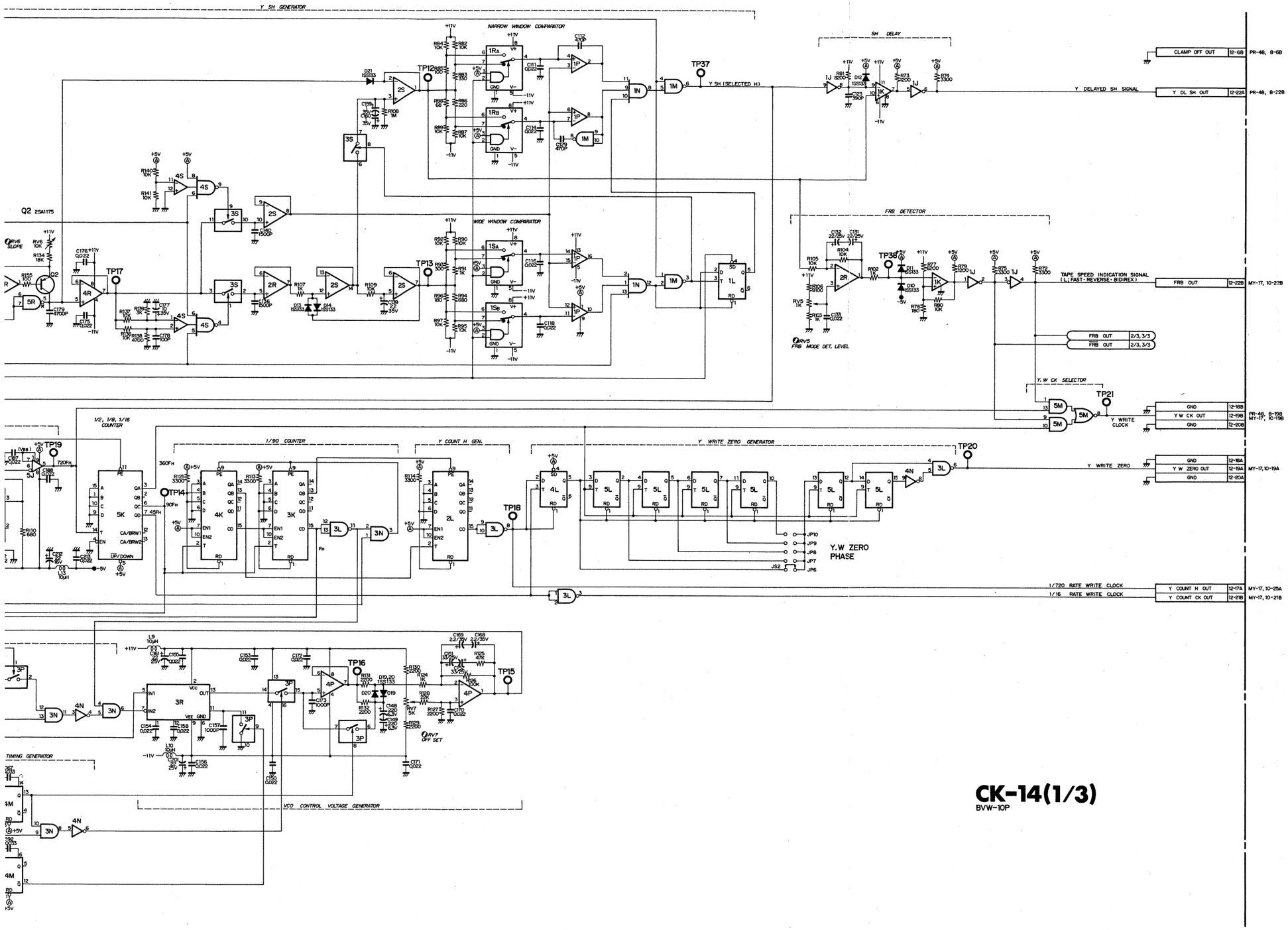

CK-14(1/3)

BVW-10P

CK-14 (VIDEO TBC)

Ref. No.	Type	Pin No. −11V	−5V	GND	+5V	+11V
IC1	SN74LS74AN			7	14	
IC 1B	SN74LS423N			8	16	
IC 1C	SN74LS74AN			7	14	
IC 1D	SN74LS00N			7	14	
IC 1E	SN74LS11N			7	14	
IC 1F	HA1-4905-5	5		9	1	13
IC 1GA	TL601CP	5		1		8
IC 1GB	TL601CP	5		1		8
IC 1HA	TL601CP	5		1		8
IC 1HB	TL601CP	5		1		8
IC 1I	SN74LS123N			8	16	
IC 1J	SN7406N			7	14	
IC 1K	μPC319C	6		3,8		11
IC 1L	SN74LS74AN			7	14	
IC 1M	SN74LS00N			7	14	
IC 1N	SN74LS11N			7	14	
IC 1P	HA1-4905-5	5		9	1	13
IC 1RA	TL601CP	5		1		8
IC 1RB	TL601CP	5		1		8
IC 1SA	TL601CP	5		1		8
IC 1SB	TL601CP	5		1		8
IC 1T	CX773A			12	24	
IC 1U	HD10125		8	16	9	
IC 1V	SN74LS00N			7	14	
IC 1X	CX7903			2	2	
IC 1Y	μPC319C	6		3,8		11
IC 2A	HD10124		8	16	9	
IC 2B	SN74LS221N			8	16	
IC 2C	SN74LS163AN			8	16	
IC 2D	SN74LS221N			8	16	
IC 2E	SN74LS112AN			8	16	
IC 2G	TL082CP	4				8
IC 2H	TL084CN	11				4
IC 2J	HD10124		8	16	9	
IC 2K	SN74LS221N			8	16	
IC 2L	SN74LS163AN			8	16	
IC 2M	SN74LS221N			8	16	
IC 2N	SN74LS112AN			8	16	
IC 2R	TL082CP	4				8
IC 2S	TL084CN	11				4
IC 2T	SN74365AN			8	16	
IC 2U	SN7404N			7	14	
IC 2V	SN75207BN		13	7	14	
IC 2W	SN7406N			7	14	
IC 3A	HD10198L		8	1,16		
IC 3B	SN74LS163AN			8	16	
IC 3C	SN7400N			7	14	
IC 3D	SN74LS164N			7	14	
IC 3E	SN74LS08N			7	14	
IC 3F	HI1-201-5	4		5		13
IC 3G	BX381	9		6		2
IC 3H	HI1-201-5	4		5		13
IC 3J	HD10198L		8	1,16		
IC 3K	SN74LS163AN			8	16	
IC 3L	SN7400N			7	14	
IC 3M	SN74LS164N			7	14	
IC 3N	SN74LS08N			7	14	
IC 3P	HI1-201-5	4		5		13
IC 3R	BX381	9		6		2
IC 3S	HI1-201-5	4		5		13
IC 3T	SN74LS164N			7	14	
IC 3U	SN74LS164N			7	14	
IC 3V	SN74LS221N			8	16	
IC 3W	SN74265N			8	16	
IC 3X	BX381	9		6		2
IC 4A	MC10198L		8	1,16		
IC 4B	SN74S163N			8	16	
IC 4C	SN74LS74AN			7	14	
IC 4D	SN74LS123N			8	16	
IC 4E	SN74LS04N			7	14	
IC 4F	μPC4557C	4				8
IC 4G	NJM4560D	4				8
IC 4H	SN75207BN		13	7	14	
IC 4J	MC10198L		8	1,16		
IC 4K	SN74S163N			8	16	
IC 4L	SN74LS74AN			7	14	
IC 4M	SN74LS123N			8	16	
IC 4N	SN74LS04N			7	14	
IC 4P	μPC4557C	4				8
IC 4R	NJM4560D	4				8
IC 4S	SN75207BN		13	7	14	
IC 4T	SN74LS164N			7	14	
IC 4U	SN74LS00N			7	14	
IC 4V	SN7404N			7	14	
IC 4W	SN74LS163AN			8	16	
IC 4Z	SN74LS164N			7	14	
IC 5A	HD10125		8	16	9	
IC 5B	SN74191N			8	16	
IC 5C	SN74LS174N			8	16	
IC 5D	SN74S51N			7	14	
IC 5E	SN74LS221N			8	16	
IC 5F	SN74LS221N			8	16	
IC 5G	SN75452BP			4	8	
IC 5H	μPC319C	6		3,8		11
IC 5J	HD10125		8	16	9	
IC 5K	SN74191N			8	16	
IC 5L	SN74LS174N			8	16	
IC 5M	SN74S51N			7	14	
IC 5N	SN74LS221N			8	16	
IC 5P	SN74LS221N			8	16	
IC 5R	SN75452BP			4	8	
IC 5S	μPC319C	6		3,8		11
IC 5T	SN74LS164N			7	14	
IC 5U	SN74S51N			7	14	
IC 5V	SN74LS221N			8	16	
IC 5W	SN74LS163AN			8	16	
IC 5X	SN74LS163N			8	16	
IC 5Z	SN74LS221N			8	16	

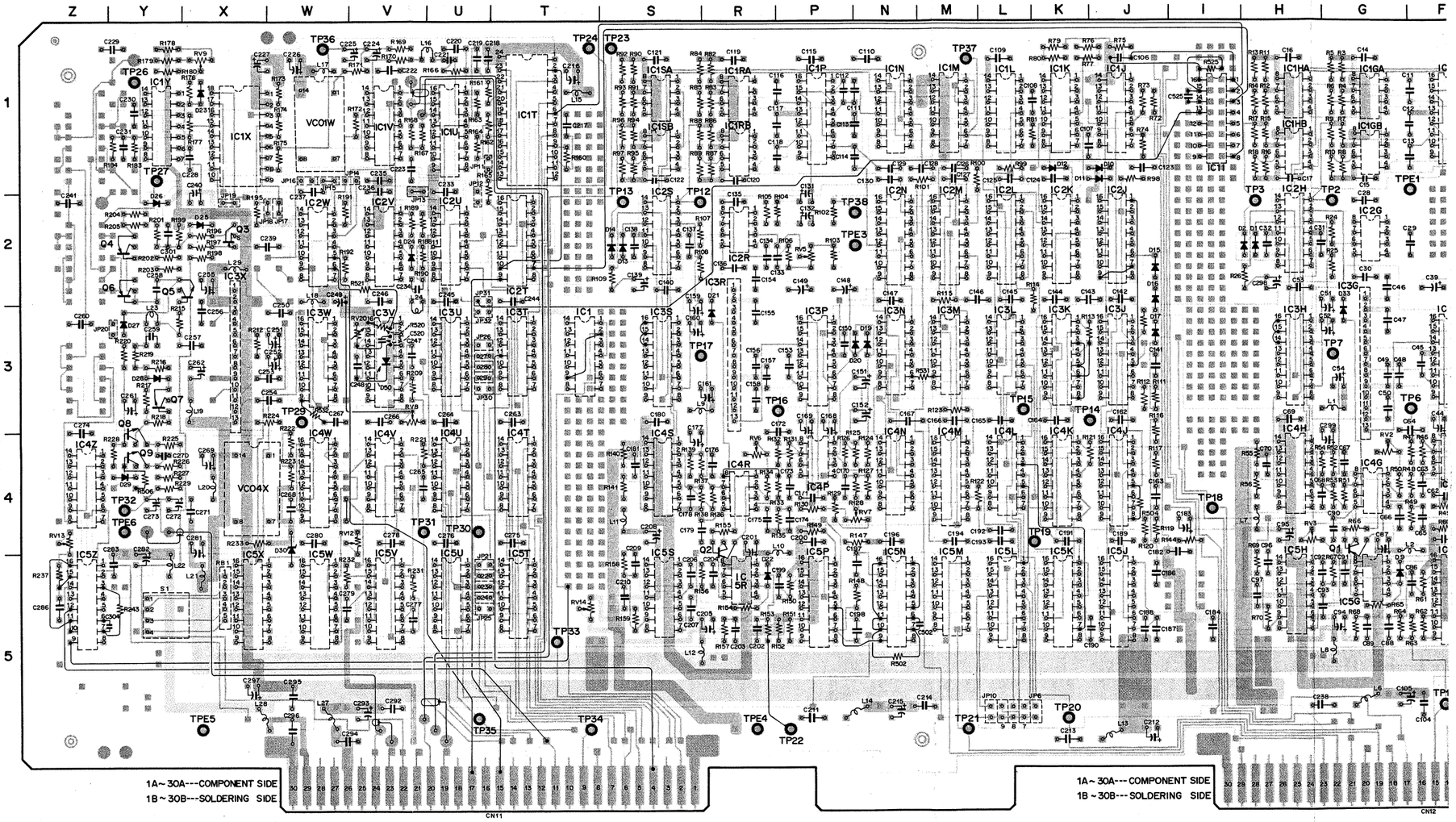

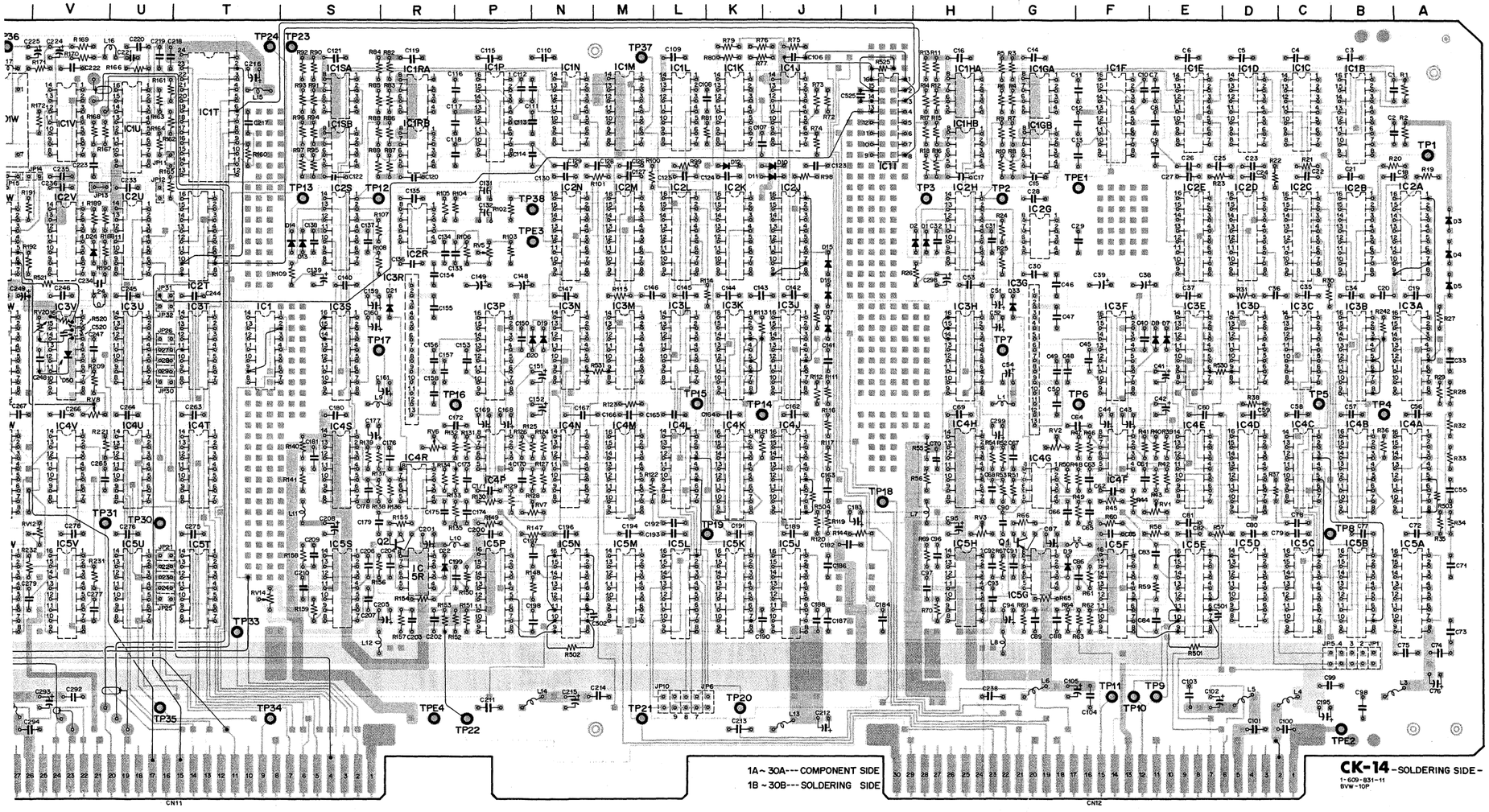

D1	H-2	TP1	A-1
D2	H-2	TP2	G-2
D3	A-2	TP3	H-2
D4	A-2	TP4	B-3
D5	A-2	TP5	C-3
D7	E-3	TP6	F-3
D8	E-3	TP7	G-3
D9	G-5	TP8	C-4
D10	J-1	TP9	E-5
D11	J-1	TP10	F-5
D12	K-1	TP11	F-5
D13	S-2	TP12	R-2
D14	S-2	TP13	S-2
D15	J-2	TP14	K-3
D16	J-2	TP15	L-3
D17	J-3	TP16	P-3
D19	N-3	TP17	S-3
D20	N-3	TP18	I-4
D21	R-3	TP19	K-4
D22	R-5	TP20	K-5
D23	X-1	TP21	M-5
D24	V-2	TP22	P-5
D25	X-2	TP23	S-1
D26	Y-2	TP24	T-1
D27	Y-3	TP26	Y-1
D28	Y-3	TP27	Y-1
D29	Y-4	TP29	W-3
D30	W-4	TP30	U-4
D33	G-3	TP31	V-4
D50	V-3	TP32	V-4
		TP33	T-5
IC1	T-3	TP34	T-5
		TP35	U-5
Q1	G-4	TP36	W-1
Q2	R-4	TP37	M-1
Q3	X-2	TP38	N-2
Q4	Y-2		
Q5	Y-2	TPE1	F-1
Q6	Y-2	TPE2	B-5
Q7	Y-3	TPE3	N-2
Q8	Y-3	TPE4	R-5
Q9	Y-4	TPE5	X-5
		TPE6	Y-4
RV1	E-4		
RV2	G-4		
RV3	H-4		
RV5	P-2		
RV6	R-4		
RV7	N-4		
RV8	V-3		
RV9	X-1		
RV12	W-4		
RV13	Z-4		
RV14	T-5		
RV20	V-3		

CK-14 (2/3) (VIDEO TBC)

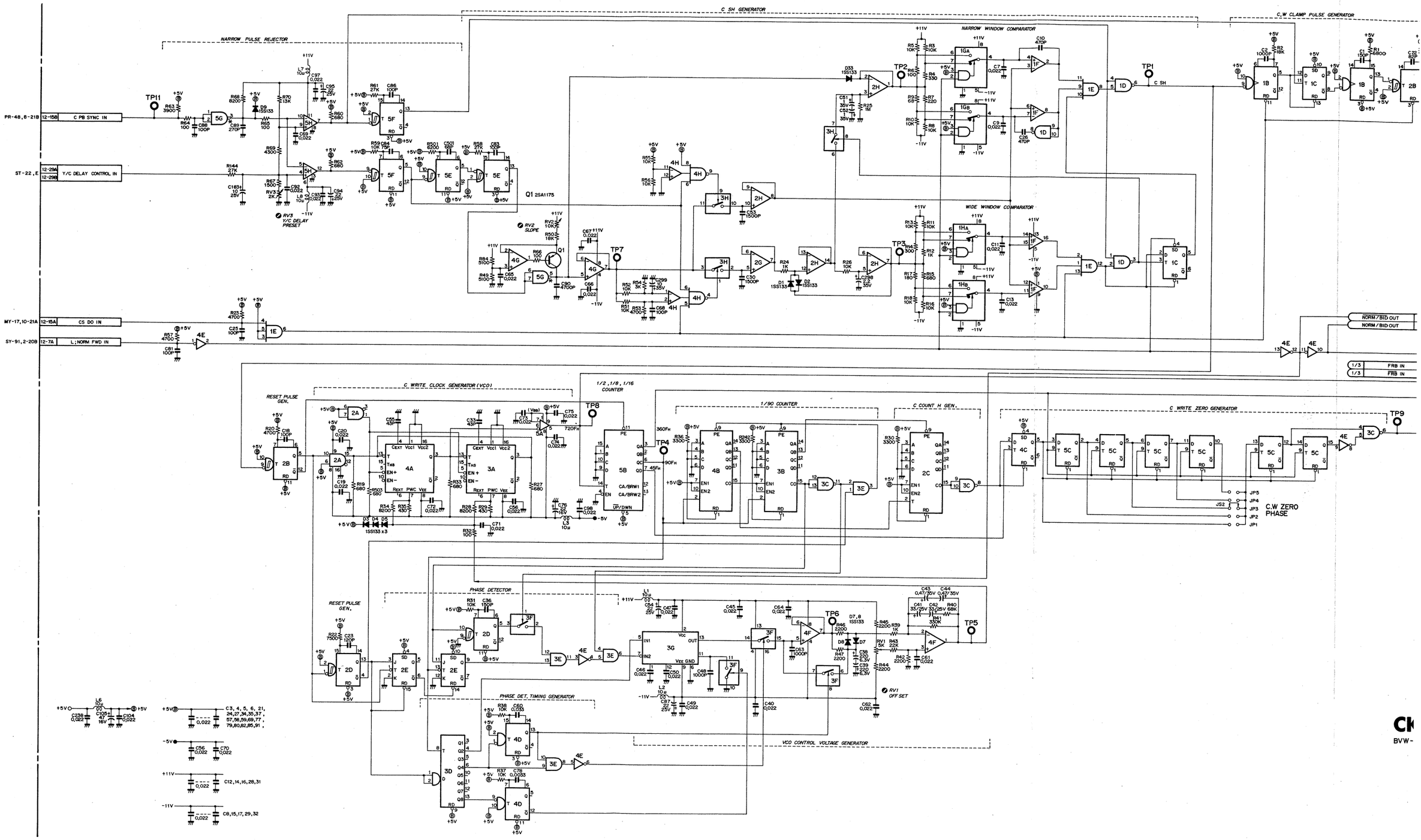

CK-14 (2/3)

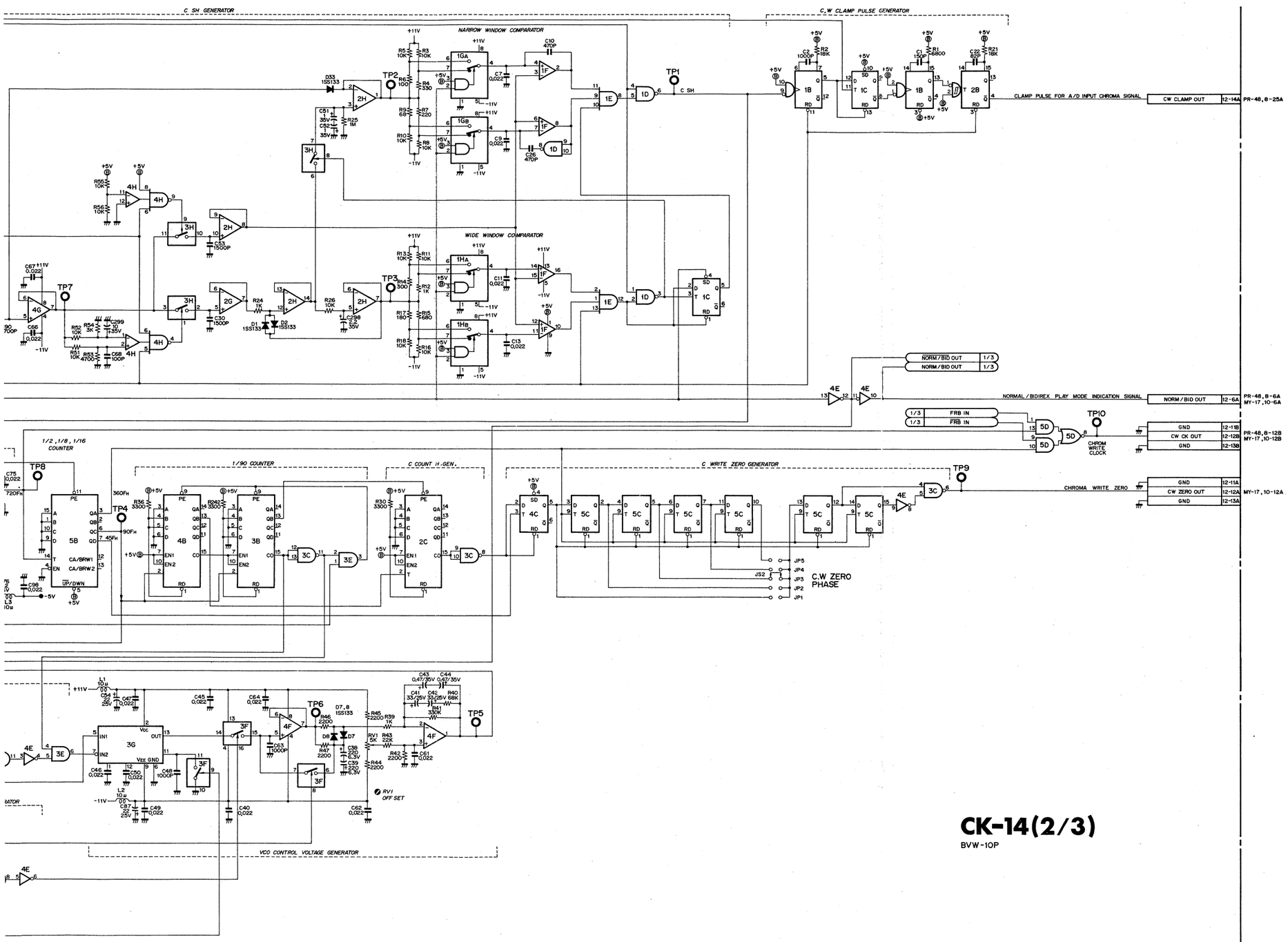

CK-14(2/3)

BVW-10P

CK-14 (VIDEO TBC)

Ref. No.	Type	Pin No. −11V	−5V	GND	+5V	+11V
IC1	SN74LS74AN			7	14	
IC 1B	SN74LS423N			8	16	
IC 1C	SN74LS74AN			7	14	
IC 1D	SN74LS00N			7	14	
IC 1E	SN74LS11N			7	14	
IC 1F	HA1-4905-5	5		9	1	13
IC 1GA	TL601CP	5		1		8
IC 1GB	TL601CP	5		1		8
IC 1HA	TL601CP	5		1		8
IC 1HB	TL601CP	5		1		8
IC 1I	SN74LS123N			8	16	
IC 1J	SN7406N			7	14	
IC 1K	μPC319C	6		3,8		11
IC 1L	SN74LS74AN			7	14	
IC 1M	SN74LS00N			7	14	
IC 1N	SN74LS11N			7	14	
IC 1P	HA1-4905-5	5		9	1	13
IC 1RA	TL601CP	5		1		8
IC 1RB	TL601CP	5		1		8
IC 1SA	TL601CP	5		1		8
IC 1SB	TL601CP	5		1		8
IC 1T	CX773A			12	24	
IC 1U	HD10125		8	16	9	
IC 1V	SN74LS00N			7	14	
IC 1X	CX7903				2	
IC 1Y	μPC319C	6		3,8		11
IC 2A	HD10124		8	16	9	
IC 2B	SN74LS221N			8	16	
IC 2C	SN74LS163AN			8	16	
IC 2D	SN74LS221N			8	16	
IC 2E	SN74LS112AN			8	16	
IC 2G	TL082CP	4				8
IC 2H	TL084CN	11				4
IC 2J	HD10124		8	16	9	
IC 2K	SN74LS221N			8	16	
IC 2L	SN74LS163AN			8	16	
IC 2M	SN74LS221N			8	16	
IC 2N	SN74LS112AN			8	16	
IC 2R	TL082CP	4				8
IC 2S	TL084CN	11				4
IC 2T	SN74365AN			8	16	
IC 2U	SN7404N			7	14	
IC 2V	SN75207BN		13	7	14	
IC 2W	SN7406N			7	14	
IC 3A	HD10198L		8	1,16		
IC 3B	SN74LS163AN			8	16	
IC 3C	SN7400N			7	14	
IC 3D	SN74LS164N			7	14	
IC 3E	SN74LS08N			7	14	
IC 3F	H11-201-5	4		5		13
IC 3G	BX381	9		6		2
IC 3H	H11-201-5	4		5		13
IC 3J	HD10198L		8	1,16		
IC 3K	SN74LS163AN			8	16	
IC 3L	SN7400N			7	14	
IC 3M	SN74LS164N			7	14	
IC 3N	SN74LS08N			7	14	
IC 3P	H11-201-5	4		5		13
IC 3R	BX381	9		6		2
IC 3S	H11-201-5	4		5		13
IC 3T	SN74LS164N			7	14	
IC 3U	SN74LS164N			7	14	
IC 3V	SN74LS221N			8	16	
IC 3W	SN74265N			8	16	
IC 3X	BX381	9		6		2
IC 4A	MC10198L		8	1,16		
IC 4B	SN74S163N			8	16	
IC 4C	SN74LS74AN			7	14	
IC 4D	SN74LS123N			8	16	
IC 4E	SN74LS04N			7	14	
IC 4F	μPC4557C	4				8
IC 4G	NJM4560D	4				8
IC 4H	SN75207BN		13	7	14	
IC 4J	MC10198L		8	1,16		
IC 4K	SN74S163N			8	16	
IC 4L	SN74LS74AN			7	14	
IC 4M	SN74LS123N			8	16	
IC 4N	SN74LS04N			7	14	
IC 4P	μPC4557C	4				8
IC 4R	NJM4560D	4				8
IC 4S	SN75207BN		13	7	14	
IC 4T	SN74LS164N			7	14	
IC 4U	SN74LS00N			7	14	
IC 4V	SN7404N			7	14	
IC 4W	SN74LS163AN			8	16	
IC 4Z	SN74LS164N			7	14	
IC 5A	HD10125		8	16	9	
IC 5B	SN74191N			8	16	
IC 5C	SN74LS174N			8	16	
IC 5D	SN74S51N			7	14	
IC 5E	SN74LS221N			8	16	
IC 5F	SN74LS221N			8	16	
IC 5G	SN75452BP			4	8	
IC 5H	μPC319C	6		3,8		11
IC 5J	HD10125		8	16	9	
IC 5K	SN74191N			8	16	
IC 5L	SN74LS174N			8	16	
IC 5M	SN74S51N			7	14	
IC 5N	SN74LS221N			8	16	
IC 5P	SN74LS221N			8	16	
IC 5R	SN75452BP			4	8	
IC 5S	μPC319C	6		3,8		11
IC 5T	SN74LS164N			7	14	
IC 5U	SN74S51N			7	14	
IC 5V	SN74LS221N			8	16	
IC 5W	SN74LS163AN			8	16	
IC 5X	SN74S163N			8	16	
IC 5Z	SN74LS221N			8	16	

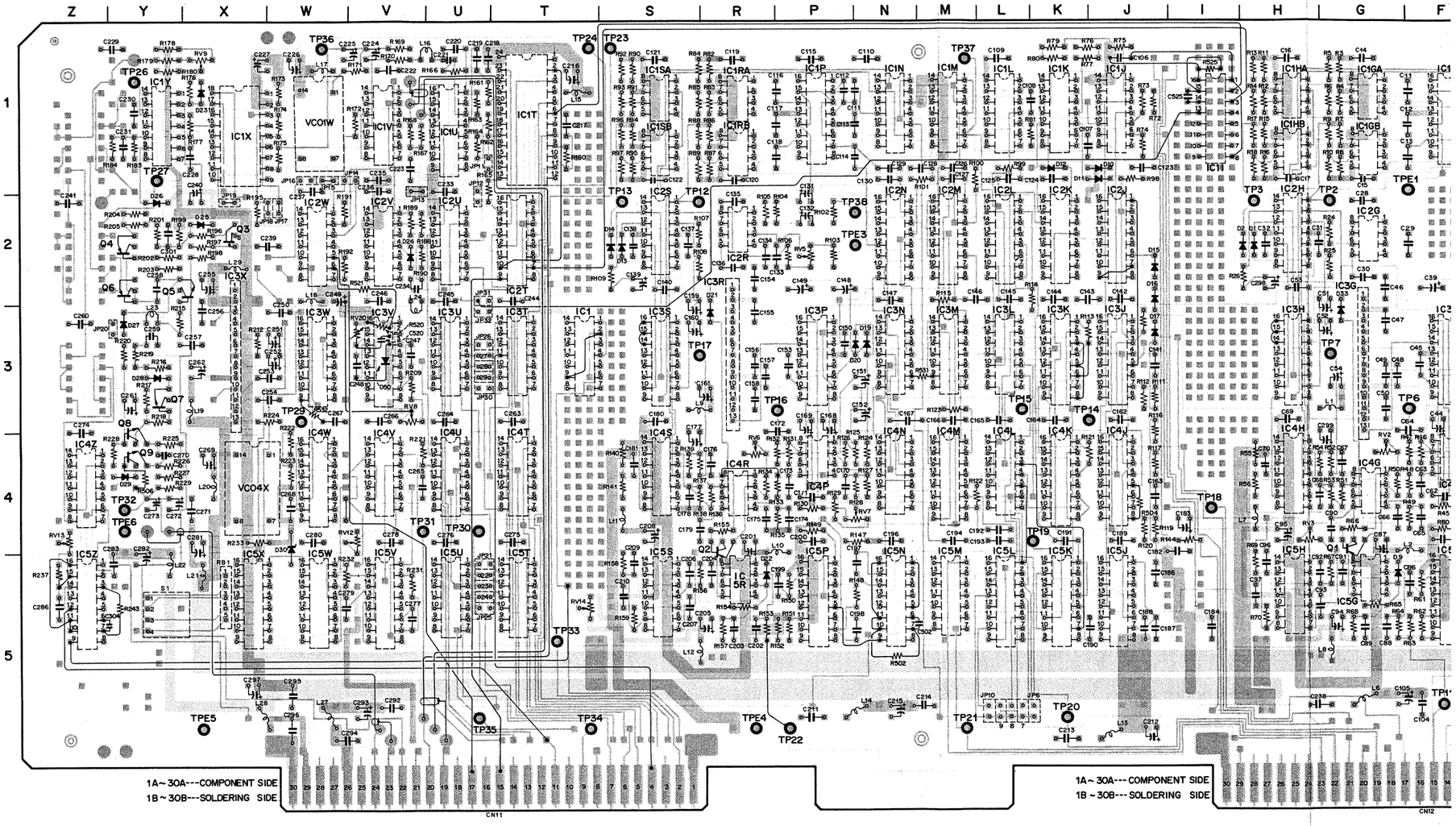

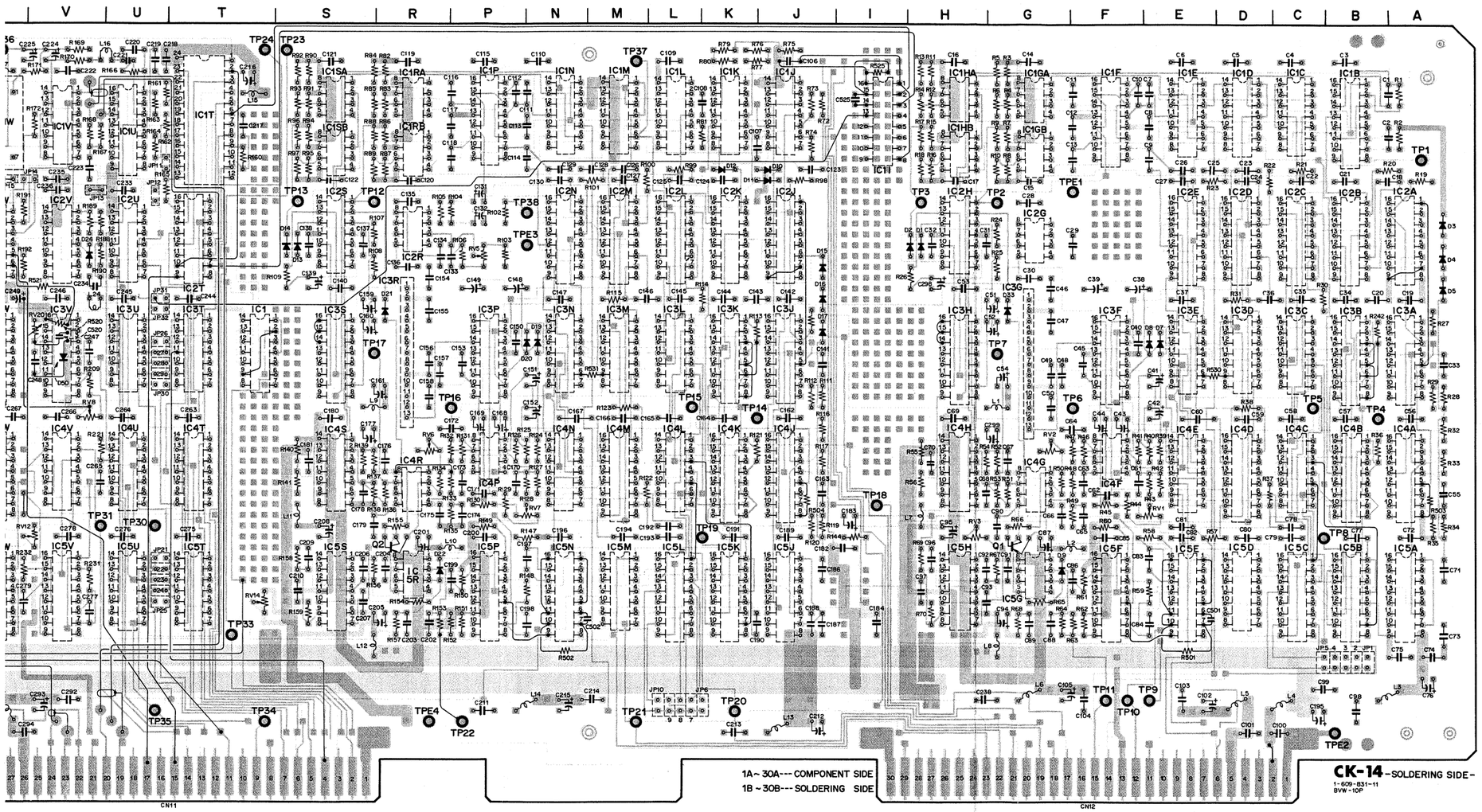

CK-14 -SOLDERING SIDE-

1-609-831-11
8VW-10P

D1	H-2	TP1	A-1
D2	H-2	TP2	G-2
D3	A-2	TP3	H-2
D4	A-2	TP4	B-3
D5	A-2	TP5	C-3
D7	E-3	TP6	F-3
D8	E-3	TP7	G-3
D9	G-5	TP8	C-4
D10	J-1	TP9	E-5
D11	J-1	TP10	F-5
D12	K-1	TP11	F-5
D13	S-2	TP12	R-2
D14	S-2	TP13	S-2
D15	J-2	TP14	K-3
D16	J-2	TP15	L-3
D17	J-3	TP16	P-3
D19	N-3	TP17	S-3
D20	N-3	TP18	I-4
D21	R-3	TP19	K-4
D22	R-5	TP20	K-5
D23	X-1	TP21	M-5
D24	V-2	TP22	P-5
D25	X-2	TP23	S-1
D26	Y-2	TP24	T-1
D27	Y-3	TP26	Y-1
D28	Y-3	TP27	Y-1
D29	Y-4	TP29	W-3
D30	W-4	TP30	U-4
D33	G-3	TP31	V-4
D50	V-3	TP32	Y-4
		TP33	T-5
IC1	T-3	TP34	T-5
		TP35	U-5
Q1	G-4	TP36	W-1
Q2	R-4	TP37	M-1
Q3	X-2	TP38	N-2
Q4	Y-2		
Q5	Y-2	TPE1	F-1
Q6	Y-2	TPE2	B-5
Q7	Y-3	TPE3	N-2
Q8	Y-3	TPE4	R-5
Q9	Y-4	TPE5	X-5
		TPE6	Y-4
RV1	E-4		
RV2	G-4		
RV3	H-4		
RV5	P-2		
RV6	R-4		
RV7	N-4		
RV8	V-3		
RV9	X-1		
RV12	W-4		
RV13	Z-4		
RV14	T-5		
RV20	V-3		

K-14 (3/3) (VIDEO TBC)

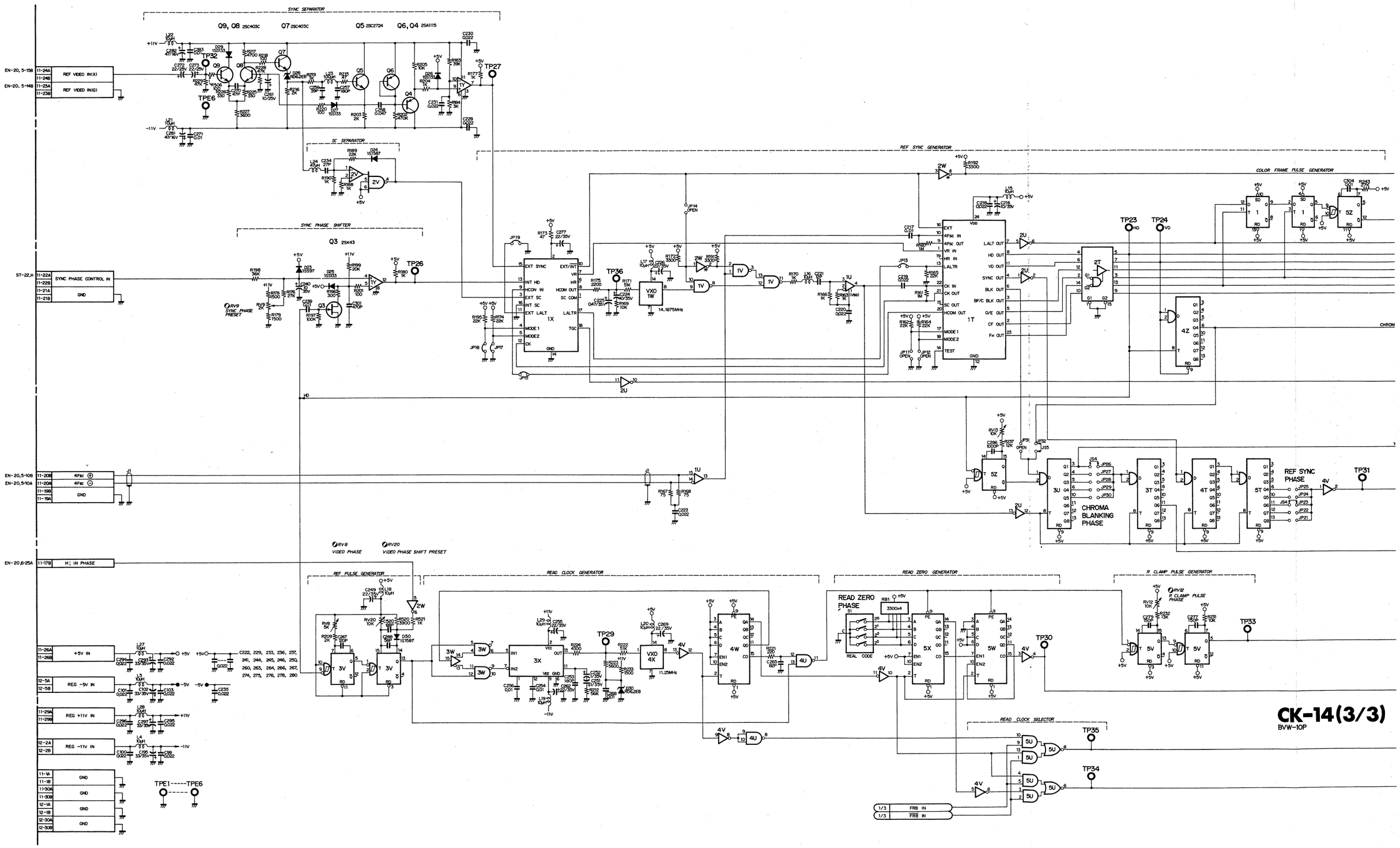

CK-14 (3/3)

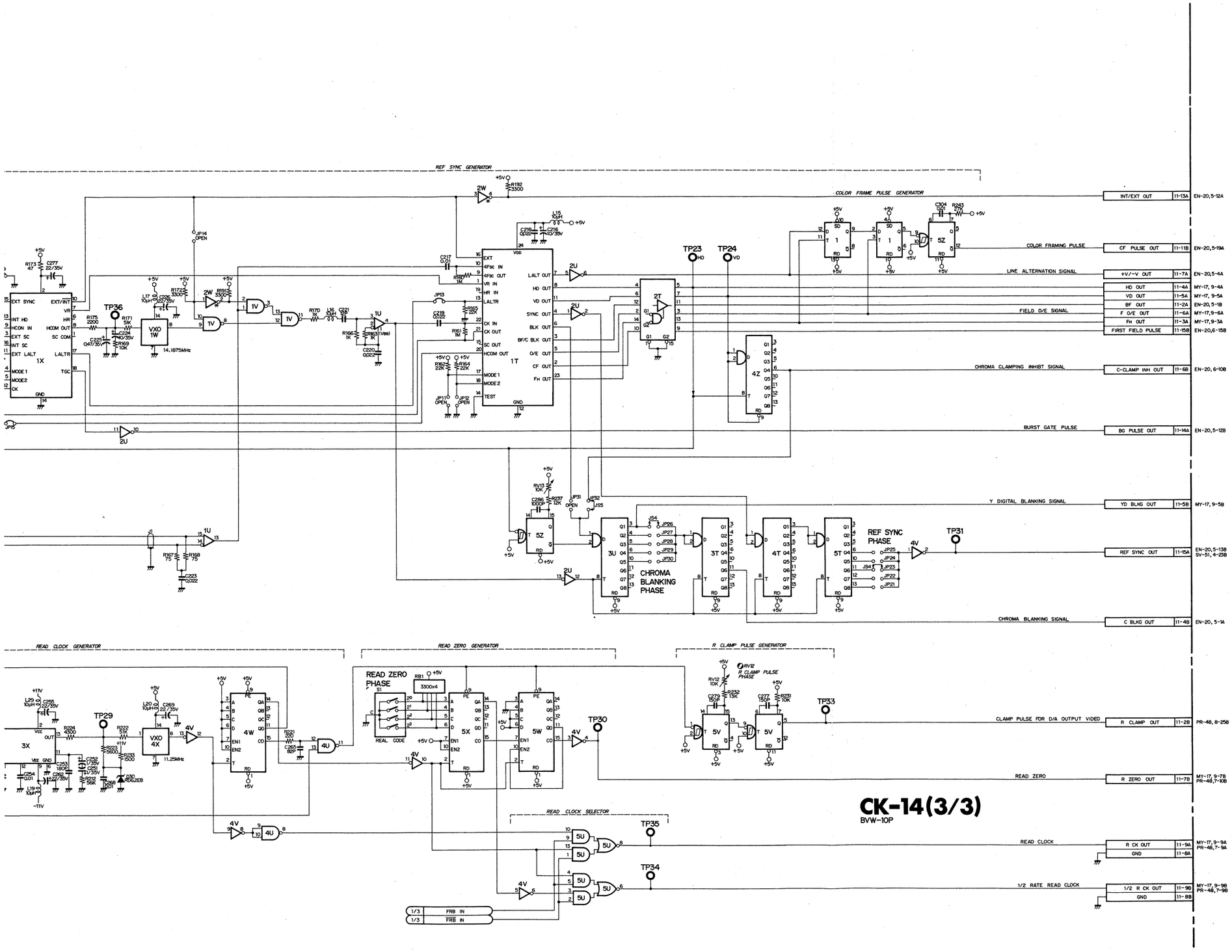
REF SYNC GENERATOR
COLOR FRAME PULSE GENERATOR
READ CLOCK GENERATOR
READ ZERO GENERATOR
R CLAMP PULSE GENERATOR
READ CLOCK SELECTOR
INT/EXT OUT 11-13A EN-20,5-12A
COLOR FRAMING PULSE
CF PULSE OUT 11-11B EN-20,5-19A
LINE ALTERNATION SIGNAL
+V/-V OUT 11-7A EN-20,5-4A
HD OUT 11-4A MY-17, 9-4A
VD OUT 11-5A MY-17, 9-5A
BF OUT 11-2A EN-20,5-1B
FIELD O/E SIGNAL
F O/E OUT 11-6A MY-17,9-6A
FH OUT 11-3A MY-17,9-3A
FIRST FIELD PULSE 11-15B EN-20,6-15B
CHROMA CLAMPING INHIBIT SIGNAL
C-CLAMP INH OUT 11-6B EN-20,6-10B
BURST GATE PULSE
BG PULSE OUT 11-14A EN-20,5-12B
Y DIGITAL BLANKING SIGNAL
YD BLKG OUT 11-5B MY-17, 9-5B
REF SYNC PHASE
REF SYNC OUT 11-15A EN-20,5-13B SV-51, 4-23B
CHROMA BLANKING PHASE
CHROMA BLANKING SIGNAL
C BLKG OUT 11-4B EN-20, 5-1A
CLAMP PULSE FOR D/A OUTPUT VIDEO
R CLAMP OUT 11-2B PR-48, 8-25B
R CLAMP PULSE PHASE
READ ZERO
R ZERO OUT 11-7B MY-17, 9-7B PR-48,7-10B
READ ZERO PHASE
READ CLOCK
R CK OUT 11-9A MY-17, 9-9A PR-48,7-9A
GND 11-8A
1/2 RATE READ CLOCK
1/2 R CK OUT 11-9B MY-17, 9-9B PR-48,7-9B
GND 11-8B
1/3 FRB IN
1/3 FRB IN
TP23 HD
TP24 VD
TP31
TP33
TP34
TP35
TP36
TP29
TP30
VXO 1W 14.1875MHz
VXO 4X 11.25MHz
CK-14(3/3)
BVW-10P

MY-17 (VIDEO TBC)

Ref. No.	Type	Pin No. GND	Pin No. +5V
IC 1A	SN74LS164N	7	14
IC 1B	SN74LS164N	7	14
IC 1C	SN74LS164N	7	14
IC 1D	SN74LS166AN	8	16
IC 1E	SN74LS374N	10	20
IC 1F	SN74LS164N	7	14
IC 1G	SN74LS166AN	8	16
IC 1H	SN74LS161AN	8	16
IC 1J	SN74LS161AN	8	16
IC 1M	SN7408N	7	14
IC 2A	SN74LS374N	10	20
IC 2B	SN74LS374N	10	20
IC 2C	SN74LS164N	7	14
IC 2D	MSM5128-12RS	12	24
IC 2E	SN74LS164N	7	14
IC 2F	SN74LS166AN	8	16
IC 2G	MSM5128-12RS	12	24
IC 2H	SN74LS157N	8	16
IC 2J	SN74LS161AN	8	16
IC 2K	SN74LS161AN	8	16
IC 2L	SN74LS221N	8	16
IC 2M	SN74LS164N	7	14
IC 2N	SN74LS164N	7	14
IC 3A	SN74LS166AN	8	16
IC 3B	SN74LS166AN	8	16
IC 3C	SN74LS164N	7	14
IC 3E	SN74LS164N	7	14
IC 3F	SN74LS374N	10	20
IC 3H	SN74LS157N	8	16
IC 3J	SN74LS175N	8	16
IC 3K	SN74LS175N	8	16
IC 3L	SN74LS161AN	8	16
IC 3M	SN74LS74AN	7	14
IC 3N	SN74LS74AN	7	14
IC 4A	SN74LS166AN	8	16
IC 4B	SN74LS166AN	8	16
IC 4C	SN74LS374N	10	20
IC 4D	MSM5128-12RS	12	24
IC 4E	SN74LS374N	10	20
IC 4F	SN74LS166AN	8	16
IC 4G	MSM5128-12RS	12	24
IC 4H	SN74LS157N	8	16
IC 4J	SN74LS175N	8	16
IC 4K	SN74LS163AN	8	16
IC 4L	SN74LS151N	8	16
IC 4M	SN74LS30N	7	14
IC 4N	SN74LS74AN	7	14
IC 5A	SN74LS166AN	8	16
IC 5B	SN74LS166AN	8	16
IC 5C	SN74LS374N	10	20
IC 5D	MSM5128-12RS	12	24
IC 5E	SN74LS164N	7	14
IC 5F	SN74LS374N	10	20
IC 5G	MSM5128-12RS	12	24
IC 5H	SN74LS157N	8	16
IC 5J	SN74LS163AN	8	16
IC 5K	SN74LS85N	8	16
IC 5L	SN74LS393N	7	14
IC 5M	SN74LS04N	7	14
IC 5N	SN74LS04N	7	14
IC 6A	SN74LS166AN	8	16
IC 6B	SN74LS166AN	8	16
IC 6C	SN74LS164N	7	14
IC 6E	SN74LS164N	7	14
IC 6F	SN74LS164N	7	14
IC 6H	SN74LS161AN	8	16
IC 6J	SN74LS161AN	8	16
IC 6K	SN74LS191N	8	16
IC 6L	SN74LS00N	7	14
IC 6M	SN74LS74AN	7	14
IC 6P	SN74LS00N	7	14
IC 7A	SN74LS166AN	8	16
IC 7B	SN74LS166AN	8	16
IC 7C	SN74LS164N	7	14
IC 7D	MSM5128-12RS	12	24
IC 7E	SN74LS166AN	8	16
IC 7F	SN74LS166AN	8	16
IC 7G	MSM5128-12RS	12	24
IC 7H	SN74LS157N	8	16
IC 7J	SN74LS157N	8	16
IC 7K	SN74LS161AN	8	16
IC 7L	SN74LS08N	7	14
IC 7M	SN74LS221N	8	16
IC 7N	SN74LS123N	8	16
IC 7P	SN74LS164N	7	14

Ref. No.	Type	Pin No. GND	Pin No. +5V
IC 8A	SN74LS166AN	8	16
IC 8B	SN74LS166AN	8	16
IC 8C	SN74LS374N	10	20
IC 8E	SN74LS374N	10	20
IC 8F	SN74LS164N	7	14
IC 8H	SN74LS157N	8	16
IC 8J	SN74LS157N	8	16
IC 8K	SN74LS161AN	8	16
IC 8L	SN74LS191N	8	16
IC 8M	SN74LS00N	7	14
IC 8N	SN7404N	7	14
IC 8P	SN7404N	7	14
IC 9A	SN74LS166AN	8	16
IC 9B	SN74LS166AN	8	16
IC 9C	SN74LS164N	7	14
IC 9D	MSM5128-12RS	12	24
IC 9E	SN74LS166AN	8	16
IC 9F	SN74LS164N	7	14
IC 9G	MSM5128-12RS	12	24
IC 9H	SN74LS163AN	8	16
IC 9J	MBM2149L-55	9	18
IC 9K	SN74LS123N	8	16
IC 9L	SN74LS161AN	8	16
IC 9M	SN74LS04N	7	14
IC 9N	SN74LS161AN	8	16
IC 9P	SN74LS00N	7	14
IC 10A	SN74LS166AN	8	16
IC 10B	SN74LS166AN	8	16
IC 10C	SN74LS374N	10	20
IC 10D	MSM5128-12RS	12	24
IC 10E	SN74LS166AN	8	16
IC 10F	SN74LS374N	10	20
IC 10G	MSM5128-12RS	12	24
IC 10H	SN74LS163AN	8	16
IC 10J	MBM2149L-55	9	18
IC 10L	SN74LS74AN	7	14
IC 10M	SN7400N	7	14
IC 10N	SN74LS161AN	8	16
IC 10P	SN74LS161AN	8	16
IC 11A	SN74LS166AN	8	16
IC 11B	SN74LS166AN	8	16
IC 11C	SN74LS374N	10	20
IC 11E	SN74LS374N	10	20
IC 11F	SN74LS374N	10	20
IC 11H	SN74LS163AN	8	16
IC 11J	SN74LS374N	10	20
IC 11K	SN74LS02N	7	14
IC 11L	SN74LS374N	10	20
IC 11M	SN74LS374N	10	20
IC 11N	SN74LS04N	7	14
IC 12A	SN74LS374N	10	20
IC 12B	SN74LS374N	10	20
IC 12C	SN74LS164N	7	14
IC 12D	MSM5128-12RS	12	24
IC 12E	SN74273N	10	20
IC 12F	SN74LS04N	7	14
IC 12G	SN74LS164N	7	14
IC 12H	SN7404N	7	14
IC 12J	SN74LS74AN	7	14
IC 12K	SN74LS04N	7	14
IC 12N	SN74LS04N	7	14

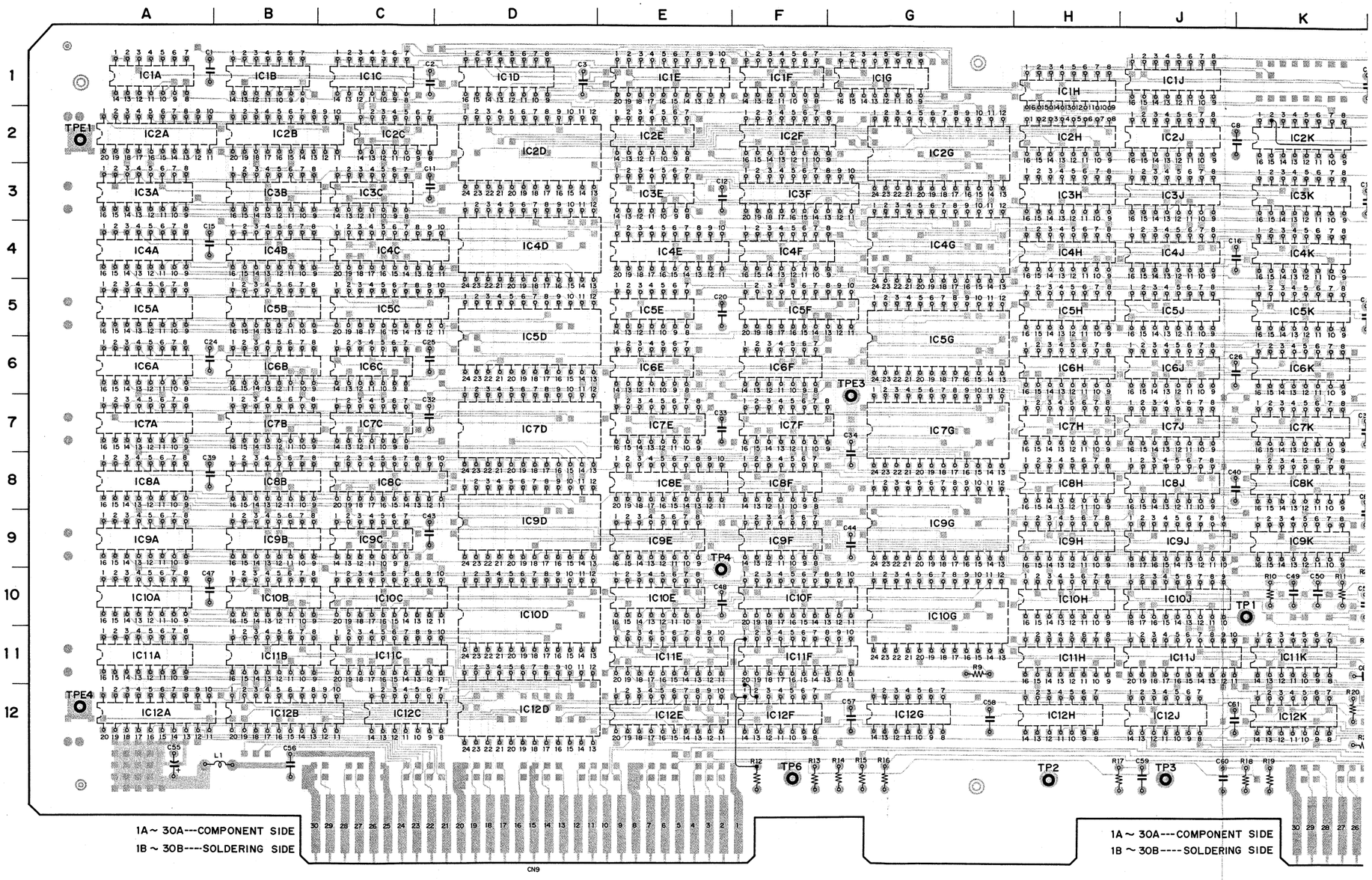

1A ~ 30A---COMPONENT SIDE
1B ~ 30B----SOLDERING SIDE

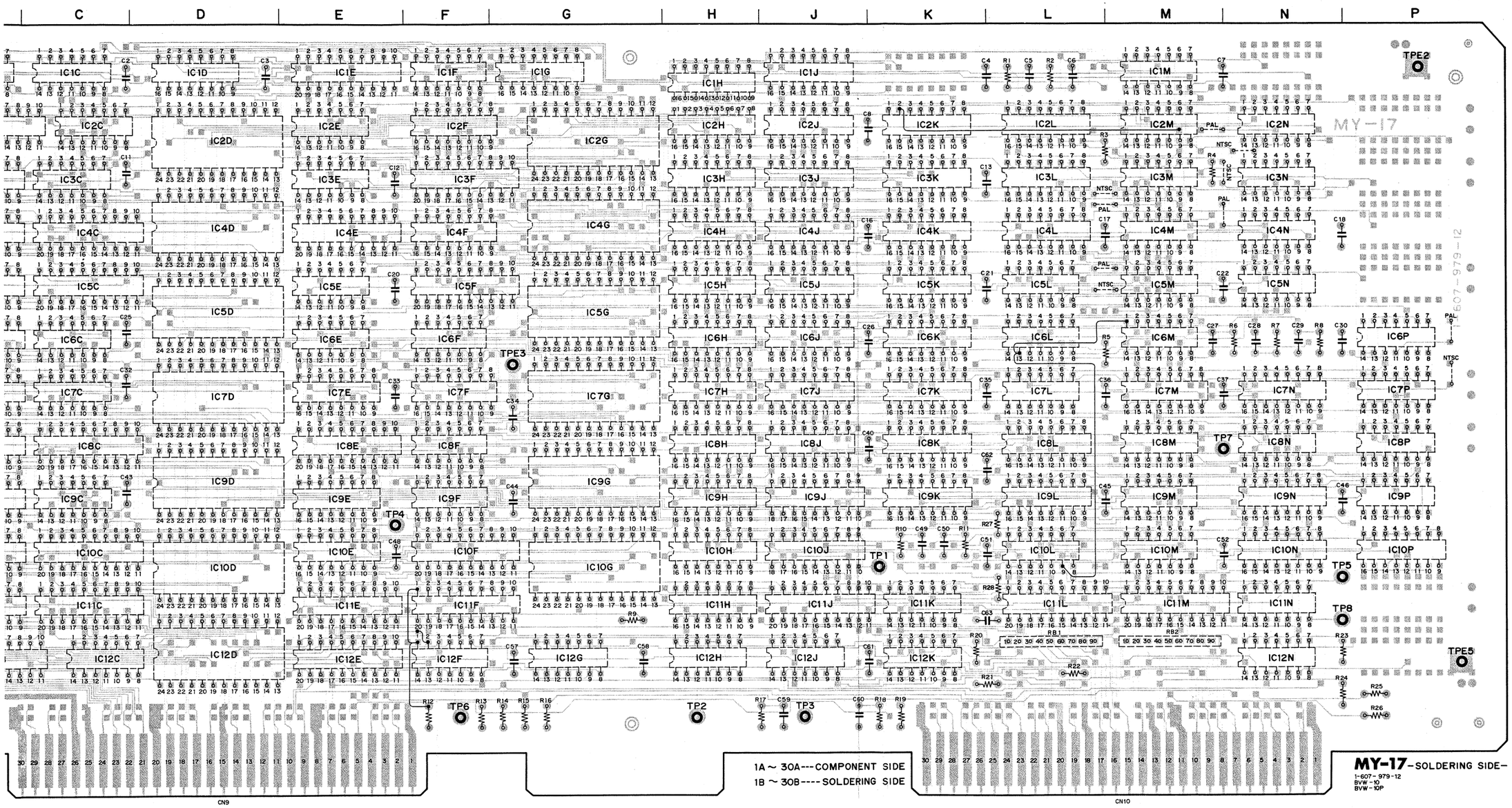
C D E F G H J K L M N P
TP1 K - 10
TP2 H - 12
TP3 J - 12
TP4 E - 9
TP5 P - 11
TP6 F - 12
TP7 N - 8
TP8 P - 11
TPE1 A - 2
TPE2 P - 1
TPE3 G - 7
TPE4 A - 12
TPE5 P - 12
MY-17
1-607-979-12
1A ~ 30A---COMPONENT SIDE
1B ~ 30B----SOLDERING SIDE
CN9
CN10
MY-17-SOLDERING SIDE-
1-607-979-12
BVW-10
BVW-10P

7 /3) (VIDEO TBC)

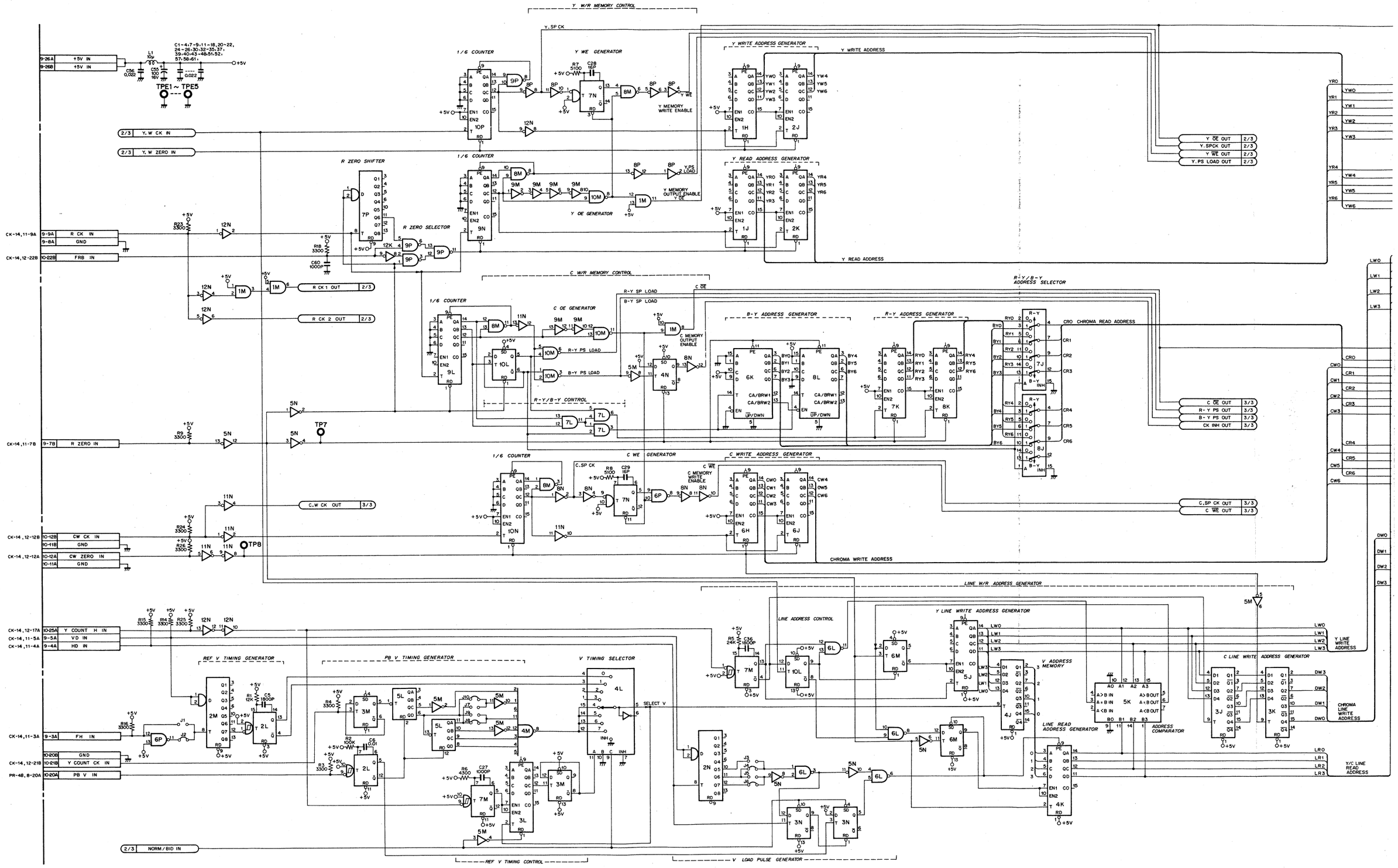
Y W/R MEMORY CONTROL
Y WRITE ADDRESS GENERATOR
Y READ ADDRESS GENERATOR
Y WRITE ADDRESS
Y READ ADDRESS
Y WE GENERATOR
Y MEMORY WRITE ENABLE
Y MEMORY OUTPUT ENABLE
Y OE GENERATOR
1/6 COUNTER
R ZERO SHIFTER
R ZERO SELECTOR
C W/R MEMORY CONTROL
C OE GENERATOR
C MEMORY OUTPUT ENABLE
R-Y/B-Y CONTROL
B-Y ADDRESS GENERATOR
R-Y ADDRESS GENERATOR
R-Y/B-Y ADDRESS SELECTOR
CRO CHROMA READ ADDRESS
C WE GENERATOR
C MEMORY WRITE ENABLE
C WRITE ADDRESS GENERATOR
CHROMA WRITE ADDRESS
LINE W/R ADDRESS GENERATOR
LINE ADDRESS CONTROL
Y LINE WRITE ADDRESS GENERATOR
V ADDRESS MEMORY
LINE READ ADDRESS GENERATOR
ADDRESS COMPARATOR
C LINE WRITE ADDRESS GENERATOR
Y LINE WRITE ADDRESS
CHROMA LINE WRITE ADDRESS
Y/C LINE READ ADDRESS
REF V TIMING GENERATOR
PB V TIMING GENERATOR
V TIMING SELECTOR
REF V TIMING CONTROL
V LOAD PULSE GENERATOR
TPE1 ~ TPE5
TP7
TP8
Y OE OUT 2/3
Y.SPCK OUT 2/3
Y WE OUT 2/3
Y.PS LOAD OUT 2/3
R CK 1 OUT 2/3
R CK 2 OUT 2/3
C OE OUT 3/3
R-Y PS OUT 3/3
B-Y PS OUT 3/3
CK INH OUT 3/3
C.SP CK OUT 3/3
C WE OUT 3/3
Y.W CK IN
Y.W ZERO IN
R CK IN
GND
FRB IN
R ZERO IN
CW CK IN
CW ZERO IN
Y COUNT H IN
VD IN
HD IN
FH IN
Y COUNT CK IN
PB V IN
NORM/BID IN

MY-17 (1/3)

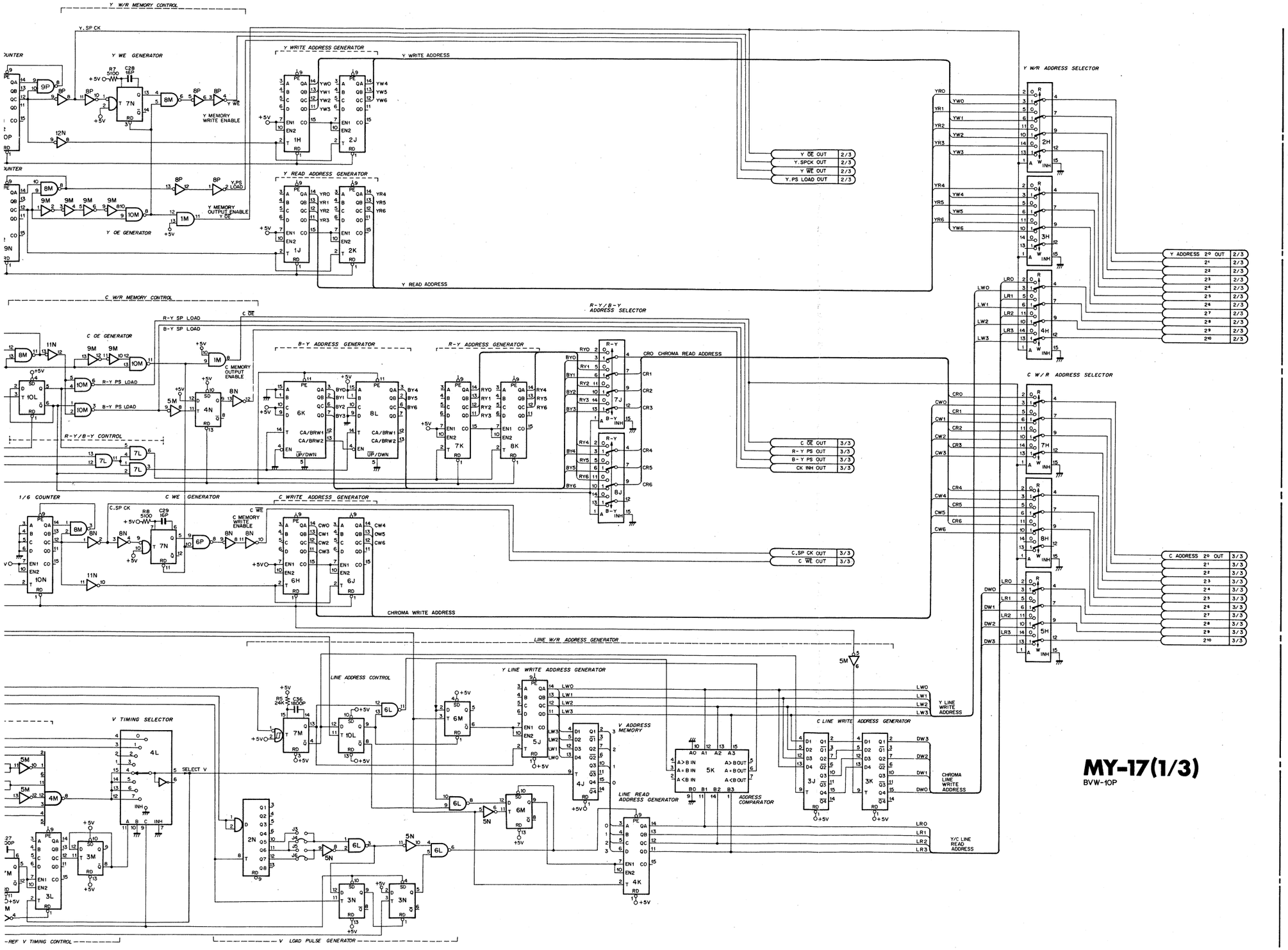

MY-17(1/3)
BVW-10P

MY-17 (VIDEO TBC)

Ref. No.	Type	Pin No. GND	Pin No. +5V
IC 1A	SN74LS164N	7	14
IC 1B	SN74LS164N	7	14
IC 1C	SN74LS164N	7	14
IC 1D	SN74LS166AN	8	16
IC 1E	SN74LS374N	10	20
IC 1F	SN74LS164N	7	14
IC 1G	SN74LS166AN	8	16
IC 1H	SN74LS161AN	8	16
IC 1J	SN74LS161AN	8	16
IC 1M	SN7408N	7	14
IC 2A	SN74LS374N	10	20
IC 2B	SN74LS374N	10	20
IC 2C	SN74LS164N	7	14
IC 2D	MSM5128-12RS	12	24
IC 2E	SN74LS164N	7	14
IC 2F	SN74LS166AN	8	16
IC 2G	MSM5128-12RS	12	24
IC 2H	SN74LS157N	8	16
IC 2J	SN74LS161AN	8	16
IC 2K	SN74LS161AN	8	16
IC 2L	SN74LS221N	8	16
IC 2M	SN74LS164N	7	14
IC 2N	SN74LS164N	7	14
IC 3A	SN74LS166AN	8	16
IC 3B	SN74LS166AN	8	16
IC 3C	SN74LS164N	7	14
IC 3E	SN74LS164N	7	14
IC 3F	SN74LS374N	10	20
IC 3H	SN74LS157N	8	16
IC 3J	SN74LS175N	8	16
IC 3K	SN74LS175N	8	16
IC 3L	SN74LS161AN	8	16
IC 3M	SN74LS74AN	7	14
IC 3N	SN74LS74AN	7	14
IC 4A	SN74LS166AN	8	16
IC 4B	SN74LS166AN	8	16
IC 4C	SN74LS374N	10	20
IC 4D	MSM5128-12RS	12	24
IC 4E	SN74LS374N	10	20
IC 4F	SN74LS166AN	8	16
IC 4G	MSM5128-12RS	12	24
IC 4H	SN74LS157N	8	16
IC 4J	SN74LS175N	8	16
IC 4K	SN74LS163AN	8	16
IC 4L	SN74LS151N	8	16
IC 4M	SN74LS30N	7	14
IC 4N	SN74LS74AN	7	14
IC 5A	SN74LS166AN	8	16
IC 5B	SN74LS166AN	8	16
IC 5C	SN74LS374N	10	20
IC 5D	MSM5128-12RS	12	24
IC 5E	SN74LS164N	7	14
IC 5F	SN74LS374N	10	20
IC 5G	MSM5128-12RS	12	24
IC 5H	SN74LS157N	8	16
IC 5J	SN74LS163AN	8	16
IC 5K	SN74LS85N	8	16
IC 5L	SN74LS393N	7	14
IC 5M	SN74LS04N	7	14
IC 5N	SN74LS04N	7	14
IC 6A	SN74LS166AN	8	16
IC 6B	SN74LS166AN	8	16
IC 6C	SN74LS164N	7	14
IC 6E	SN74LS164N	7	14
IC 6F	SN74LS164N	7	14
IC 6H	SN74LS161AN	8	16
IC 6J	SN74LS161AN	8	16
IC 6K	SN74LS191N	8	16
IC 6L	SN74LS00N	7	14
IC 6M	SN74LS74AN	7	14
IC 6P	SN74LS00N	7	14
IC 7A	SN74LS166AN	8	16
IC 7B	SN74LS166AN	8	16
IC 7C	SN74LS164N	7	14
IC 7D	MSM5128-12RS	12	24
IC 7E	SN74LS166AN	8	16
IC 7F	SN74LS166AN	8	16
IC 7G	MSM5128-12RS	12	24
IC 7H	SN74LS157N	8	16
IC 7J	SN74LS157N	8	16
IC 7K	SN74LS161AN	8	16
IC 7L	SN74LS08N	7	14
IC 7M	SN74LS221N	8	16
IC 7N	SN74LS123N	8	16
IC 7P	SN74LS164N	7	14

Ref. No.	Type	Pin No. GND	Pin No. +5V
IC 8A	SN74LS166AN	8	16
IC 8B	SN74LS166AN	8	16
IC 8C	SN74LS374N	10	20
IC 8E	SN74LS374N	10	20
IC 8F	SN74LS164N	7	14
IC 8H	SN74LS157N	8	16
IC 8J	SN74LS157N	8	16
IC 8K	SN74LS161AN	8	16
IC 8L	SN74LS191N	8	16
IC 8M	SN74LS00N	7	14
IC 8N	SN7404N	7	14
IC 8P	SN7404N	7	14
IC 9A	SN74LS166AN	8	16
IC 9B	SN74LS166AN	8	16
IC 9C	SN74LS164N	7	14
IC 9D	MSM5128-12RS	12	24
IC 9E	SN74LS166AN	8	16
IC 9F	SN74LS164N	7	14
IC 9G	MSM5128-12RS	12	24
IC 9H	SN74LS157N	8	16
IC 9J	SN74LS161AN	8	16
IC 9K	SN74LS161AN	8	16
IC 9L	SN74LS161AN	8	16
IC 9M	SN74LS04N	7	14
IC 9N	SN74LS161AN	8	16
IC 9P	SN74LS00N	7	14
IC 10A	SN74LS166AN	8	16
IC 10B	SN74LS166AN	8	16
IC 10C	SN74LS374N	10	20
IC 10D	MSM5128-12RS	12	24
IC 10E	SN74LS166AN	8	16
IC 10F	SN74LS374N	10	20
IC 10G	MSM5128-12RS	12	24
IC 10H	SN74LS163AN	8	16
IC 10J	MBM2149L-55	9	18
IC 10L	SN74LS74AN	7	14
IC 10M	SN7400N	7	14
IC 10N	SN74LS161AN	8	16
IC 10P	SN74LS161AN	8	16
IC 11A	SN74LS166AN	8	16
IC 11B	SN74LS166AN	8	16
IC 11C	SN74LS374N	10	20
IC 11E	SN74LS374N	10	20
IC 11F	SN74LS374N	10	20
IC 11H	SN74LS163AN	8	16
IC 11J	SN74LS374N	10	20
IC 11K	SN74LS02N	7	14
IC 11L	SN74LS374N	10	20
IC 11M	SN74LS374N	10	20
IC 11N	SN74LS04N	7	14
IC 12A	SN74LS374N	10	20
IC 12B	SN74LS374N	10	20
IC 12C	SN74LS164N	7	14
IC 12D	MSM5128-12RS	12	24
IC 12E	SN74273N	10	20
IC 12F	SN74LS04N	7	14
IC 12G	SN74LS164N	7	14
IC 12H	SN7404N	7	14
IC 12J	SN74LS74AN	7	14
IC 12K	SN74LS04N	7	14
IC 12N	SN74LS04N	7	14

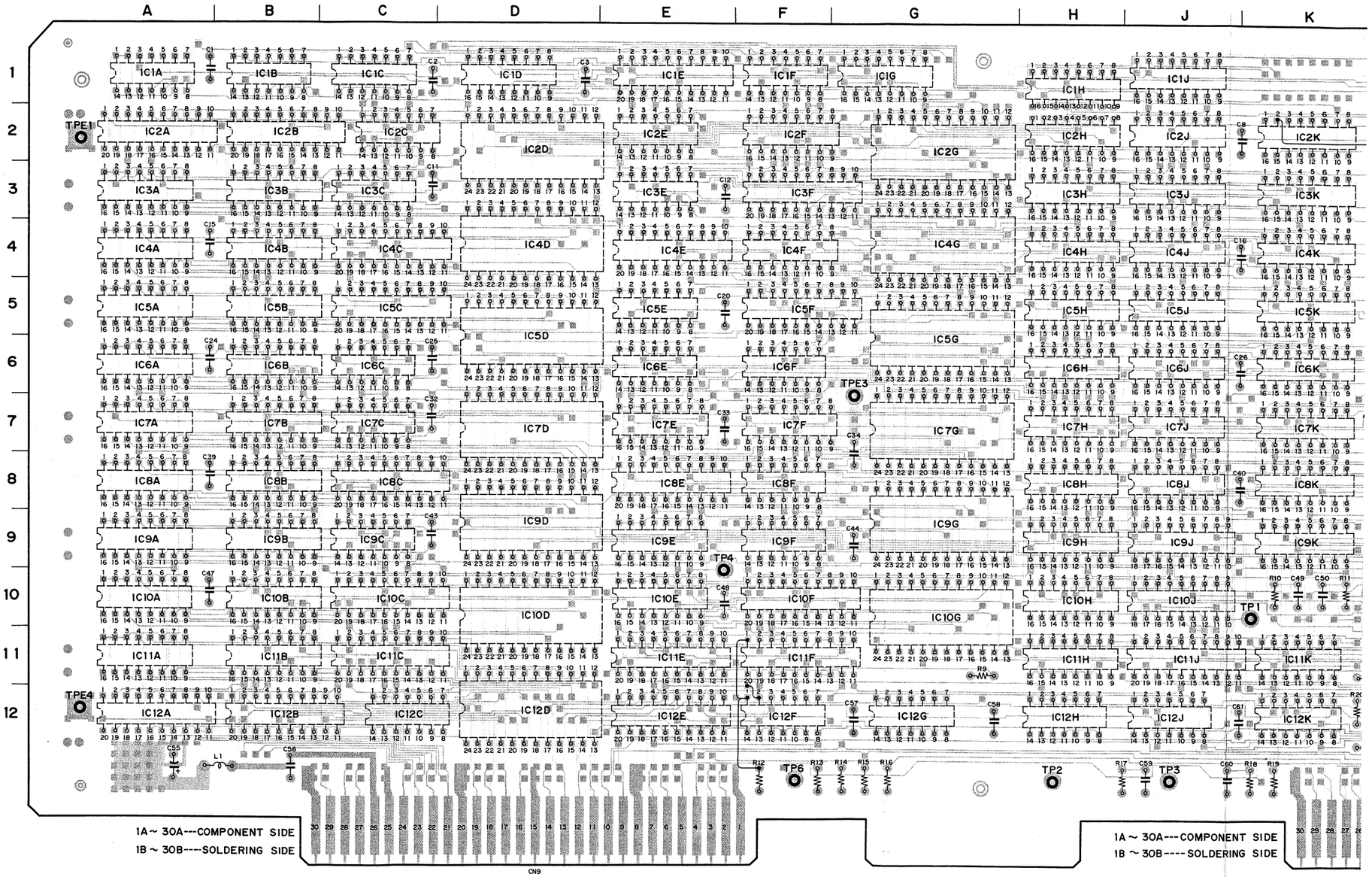

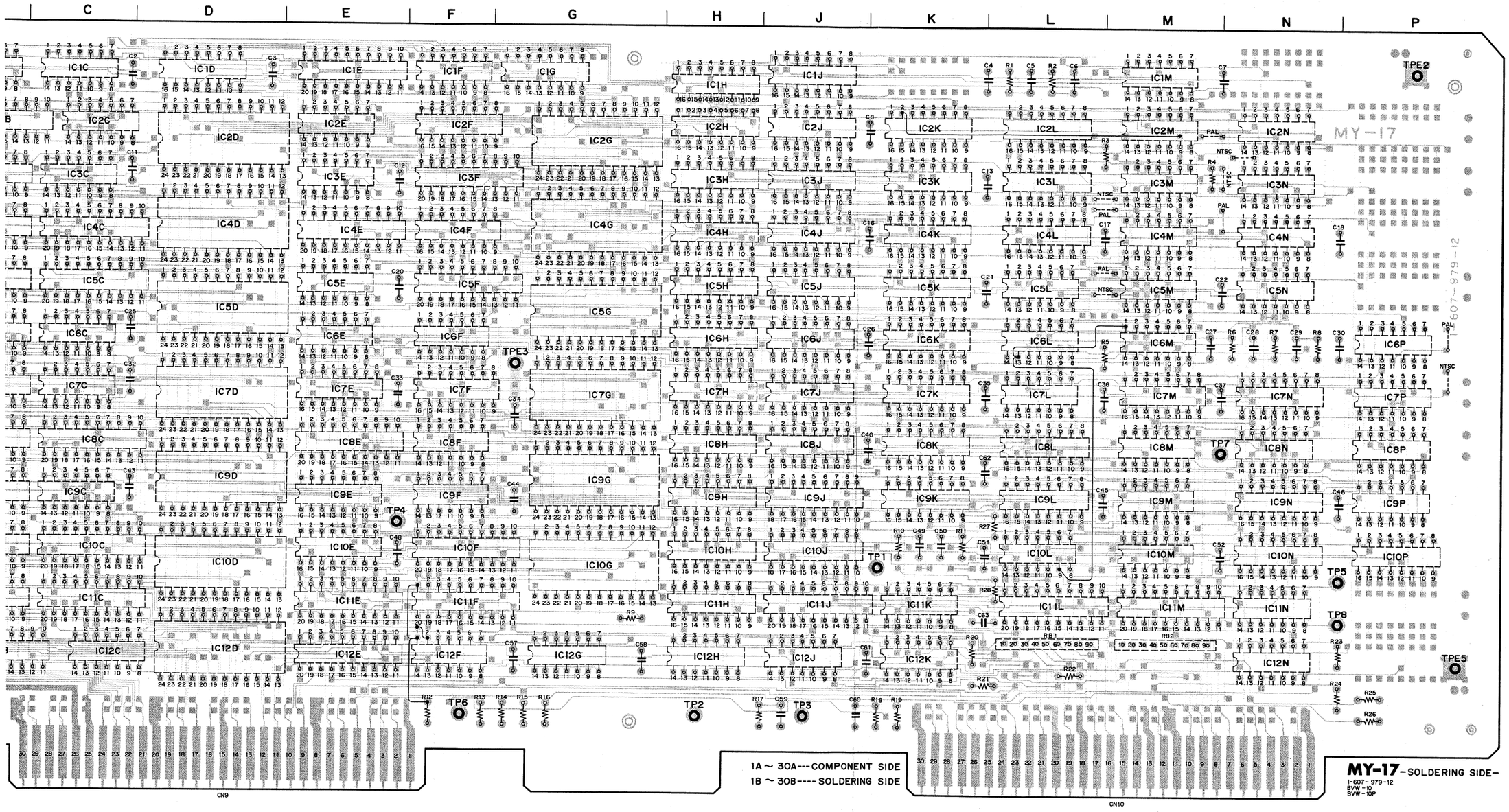

TP1	K - 10
TP2	H - 12
TP3	J - 12
TP4	E - 9
TP5	P - 11
TP6	F - 12
TP7	N - 8
TP8	P - 11
TPE1	A - 2
TPE2	P - 1
TPE3	G - 7
TPE4	A - 12
TPE5	P - 12

7 2/3) (VIDEO TBC)

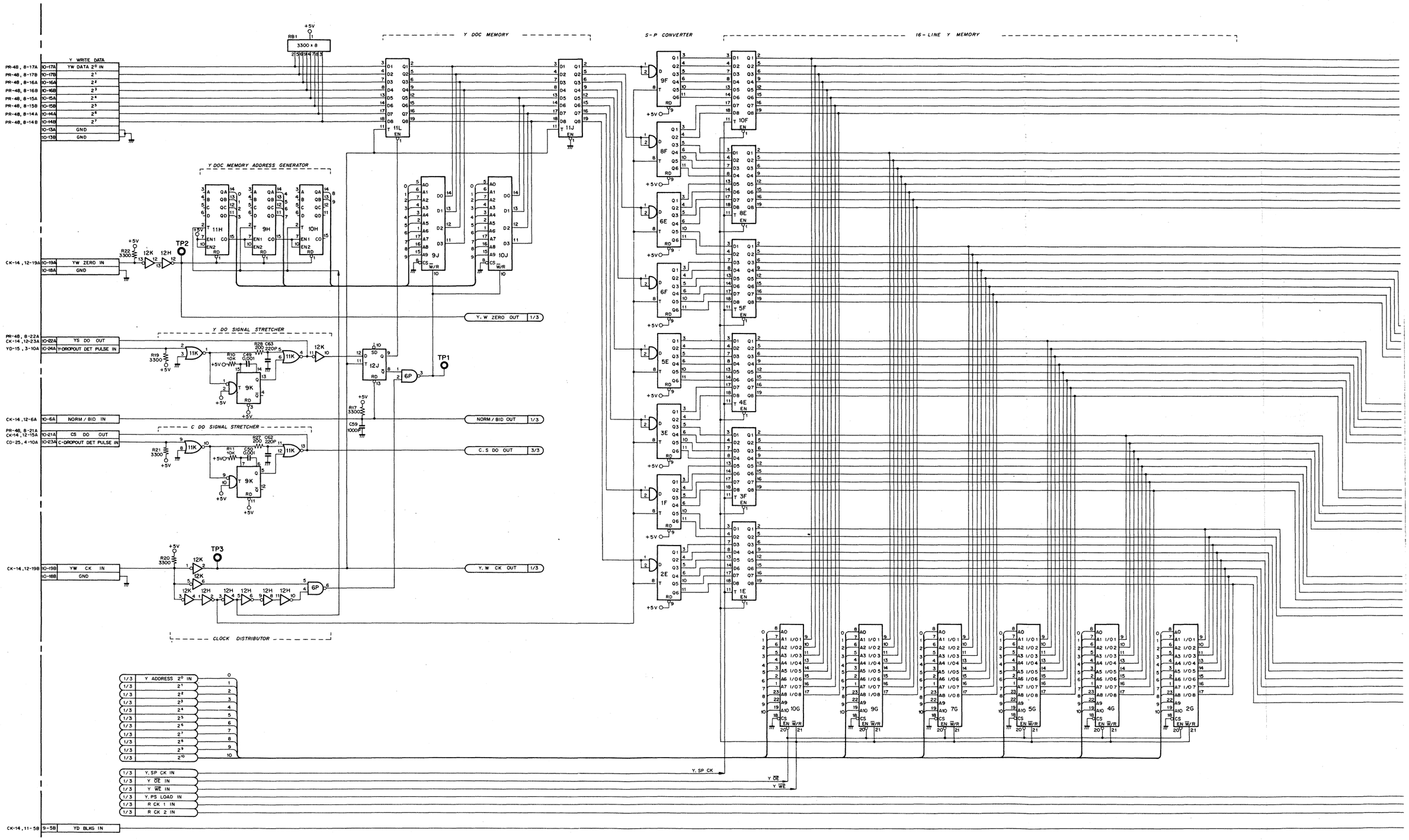

MY-17 (2/3)

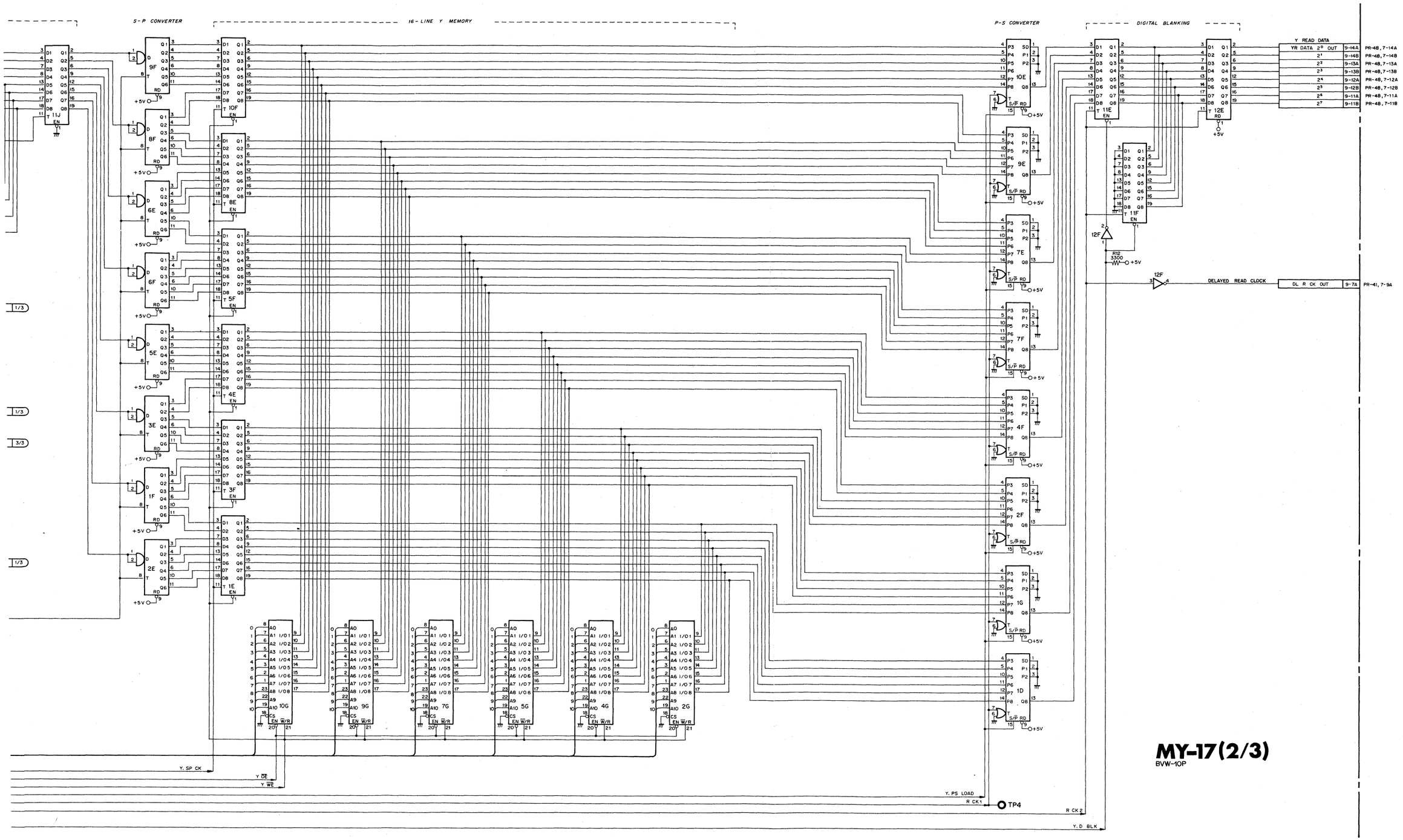

MY-17(2/3)
BVW-10P

MY-17 (VIDEO TBC)

Ref. No.	Type	Pin No. GND	Pin No. +5V
IC 1A	SN74LS164N	7	14
IC 1B	SN74LS164N	7	14
IC 1C	SN74LS164N	7	14
IC 1D	SN74LS166AN	8	16
IC 1E	SN74LS374N	10	20
IC 1F	SN74LS164N	7	14
IC 1G	SN74LS166AN	8	16
IC 1H	SN74LS161AN	8	16
IC 1J	SN74LS161AN	8	16
IC 1M	SN7408N	7	14
IC 2A	SN74LS374N	10	20
IC 2B	SN74LS374N	10	20
IC 2C	SN74LS164N	7	14
IC 2D	MSM5128-12RS	12	24
IC 2E	SN74LS164N	7	14
IC 2F	SN74LS166AN	8	16
IC 2G	MSM5128-12RS	12	24
IC 2H	SN74LS157N	8	16
IC 2J	SN74LS161AN	8	16
IC 2K	SN74LS161AN	8	16
IC 2L	SN74LS221N	8	16
IC 2M	SN74LS164N	7	14
IC 2N	SN74LS164N	7	14
IC 3A	SN74LS166AN	8	16
IC 3B	SN74LS166AN	8	16
IC 3C	SN74LS164N	7	14
IC 3E	SN74LS164N	7	14
IC 3F	SN74LS374N	10	20
IC 3H	SN74LS157N	8	16
IC 3J	SN74LS175N	8	16
IC 3K	SN74LS175N	8	16
IC 3L	SN74LS161AN	8	16
IC 3M	SN74LS74AN	7	14
IC 3N	SN74LS74AN	7	14
IC 4A	SN74LS166AN	8	16
IC 4B	SN74LS166AN	8	16
IC 4C	SN74LS374N	10	20
IC 4D	MSM5128-12RS	12	24
IC 4E	SN74LS374N	10	20
IC 4F	SN74LS166AN	8	16
IC 4G	MSM5128-12RS	12	24
IC 4H	SN74LS157N	8	16
IC 4J	SN74LS175N	8	16
IC 4K	SN74LS163AN	8	16
IC 4L	SN74LS151N	8	16
IC 4M	SN74LS30N	7	14
IC 4N	SN74LS74AN	7	14
IC 5A	SN74LS166AN	8	16
IC 5B	SN74LS166AN	8	16
IC 5C	SN74LS374N	10	20
IC 5D	MSM5128-12RS	12	24
IC 5E	SN74LS164N	7	14
IC 5F	SN74LS374N	10	20
IC 5G	MSM5128-12RS	12	24
IC 5H	SN74LS157N	8	16
IC 5J	SN74LS163AN	8	16
IC 5K	SN74LS85N	8	16
IC 5L	SN74LS393N	7	14
IC 5M	SN74LS04N	7	14
IC 5N	SN74LS04N	7	14
IC 6A	SN74LS166AN	8	16
IC 6B	SN74LS166AN	8	16
IC 6C	SN74LS164N	7	14
IC 6E	SN74LS164N	7	14
IC 6F	SN74LS164N	7	14
IC 6H	SN74LS161AN	8	16
IC 6J	SN74LS161AN	8	16
IC 6K	SN74LS191N	8	16
IC 6L	SN74LS00N	7	14
IC 6M	SN74LS74AN	7	14
IC 6P	SN74LS00N	7	14
IC 7A	SN74LS166AN	8	16
IC 7B	SN74LS166AN	8	16
IC 7C	SN74LS164N	7	14
IC 7D	MSM5128-12RS	12	24
IC 7E	SN74LS166AN	8	16
IC 7F	SN74LS166AN	8	16
IC 7G	MSM5128-12RS	12	24
IC 7H	SN74LS157N	8	16
IC 7J	SN74LS157N	8	16
IC 7K	SN74LS161AN	8	16
IC 7L	SN74LS08N	7	14
IC 7M	SN74LS221N	8	16
IC 7N	SN74LS123N	8	16
IC 7P	SN74LS164N	7	14

Ref. No.	Type	Pin No. GND	Pin No. +5V
IC 8A	SN74LS166AN	8	16
IC 8B	SN74LS166AN	8	16
IC 8C	SN74LS374N	10	20
IC 8E	SN74LS374N	10	20
IC 8F	SN74LS164N	7	14
IC 8H	SN74LS157N	8	16
IC 8J	SN74LS157N	8	16
IC 8K	SN74LS161AN	8	16
IC 8L	SN74LS191N	8	16
IC 8M	SN74LS00N	7	14
IC 8N	SN7404N	7	14
IC 8P	SN7404N	7	14
IC 9A	SN74LS166AN	8	16
IC 9B	SN74LS166AN	8	16
IC 9C	SN74LS164N	7	14
IC 9D	MSM5128-12RS	12	24
IC 9E	SN74LS166AN	8	16
IC 9F	SN74LS164N	7	14
IC 9G	MSM5128-12RS	12	24
IC 9H	SN74LS163AN	8	16
IC 9J	MBM2149L-55	9	18
IC 9K	SN74LS123N	8	16
IC 9L	SN74LS161AN	8	16
IC 9M	SN74LS04N	7	14
IC 9N	SN74LS161AN	8	16
IC 9P	SN74LS00N	7	14
IC 10A	SN74LS166AN	8	16
IC 10B	SN74LS166AN	8	16
IC 10C	SN74LS374N	10	20
IC 10D	MSM5128-12RS	12	24
IC 10E	SN74LS166AN	8	16
IC 10F	SN74LS374N	10	20
IC 10G	MSM5128-12RS	12	24
IC 10H	SN74LS163AN	8	16
IC 10J	MBM2149L-55	9	18
IC 10L	SN74LS74AN	7	14
IC 10M	SN7400N	7	14
IC 10N	SN74LS161AN	8	16
IC 10P	SN74LS161AN	8	16
IC 11A	SN74LS166AN	8	16
IC 11B	SN74LS166AN	8	16
IC 11C	SN74LS374N	10	20
IC 11E	SN74LS374N	10	20
IC 11F	SN74LS374N	10	20
IC 11H	SN74LS163AN	8	16
IC 11J	SN74LS374N	10	20
IC 11K	SN74LS02N	7	14
IC 11L	SN74LS374N	10	20
IC 11M	SN74LS374N	10	20
IC 11N	SN74LS04N	7	14
IC 12A	SN74LS374N	10	20
IC 12B	SN74LS374N	10	20
IC 12C	SN74LS164N	7	14
IC 12D	MSM5128-12RS	12	24
IC 12E	SN74273N	10	20
IC 12F	SN74LS04N	7	14
IC 12G	SN74LS164N	7	14
IC 12H	SN7404N	7	14
IC 12J	SN74LS74AN	7	14
IC 12K	SN74LS04N	7	14
IC 12N	SN74LS04N	7	14

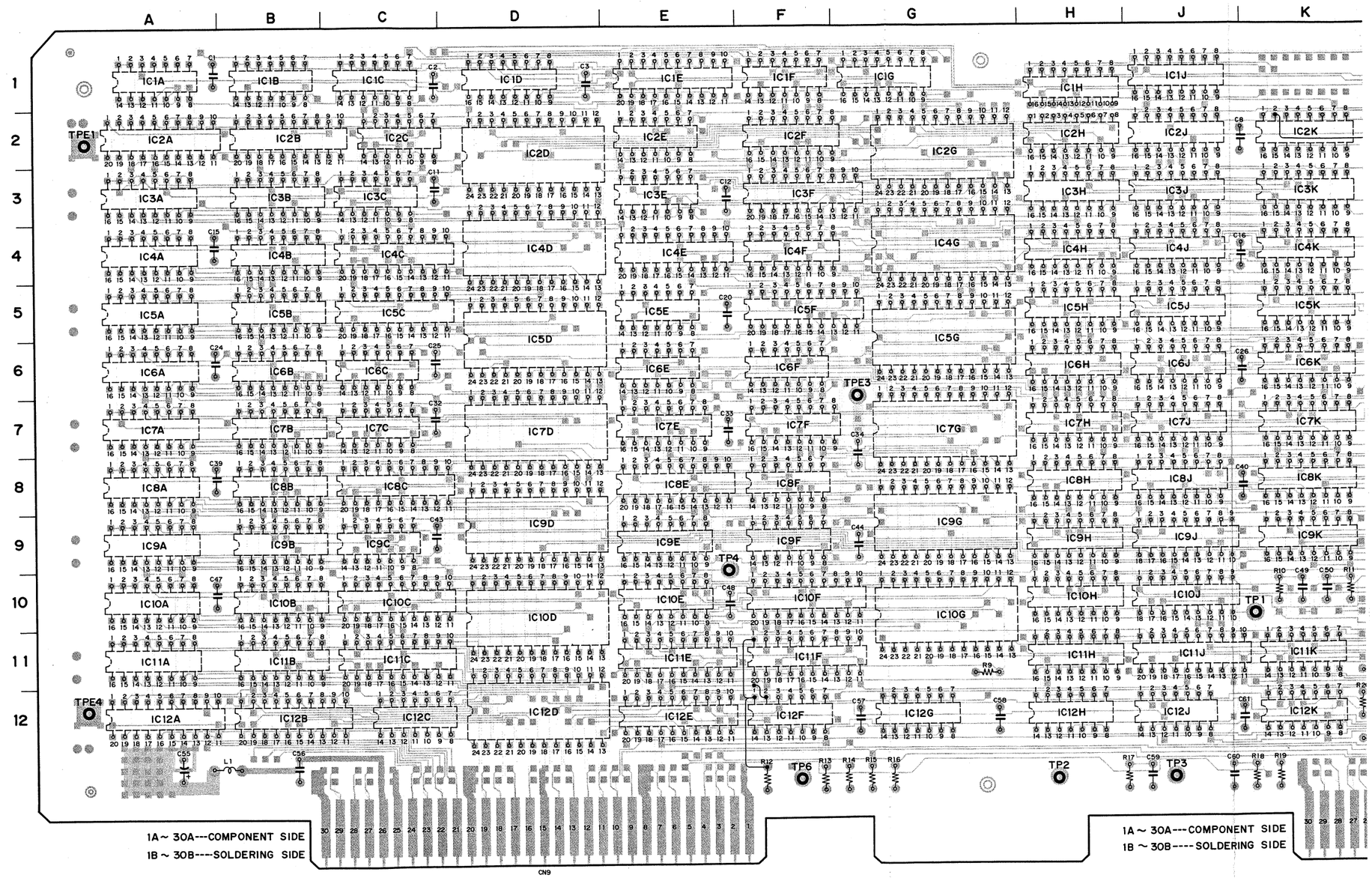

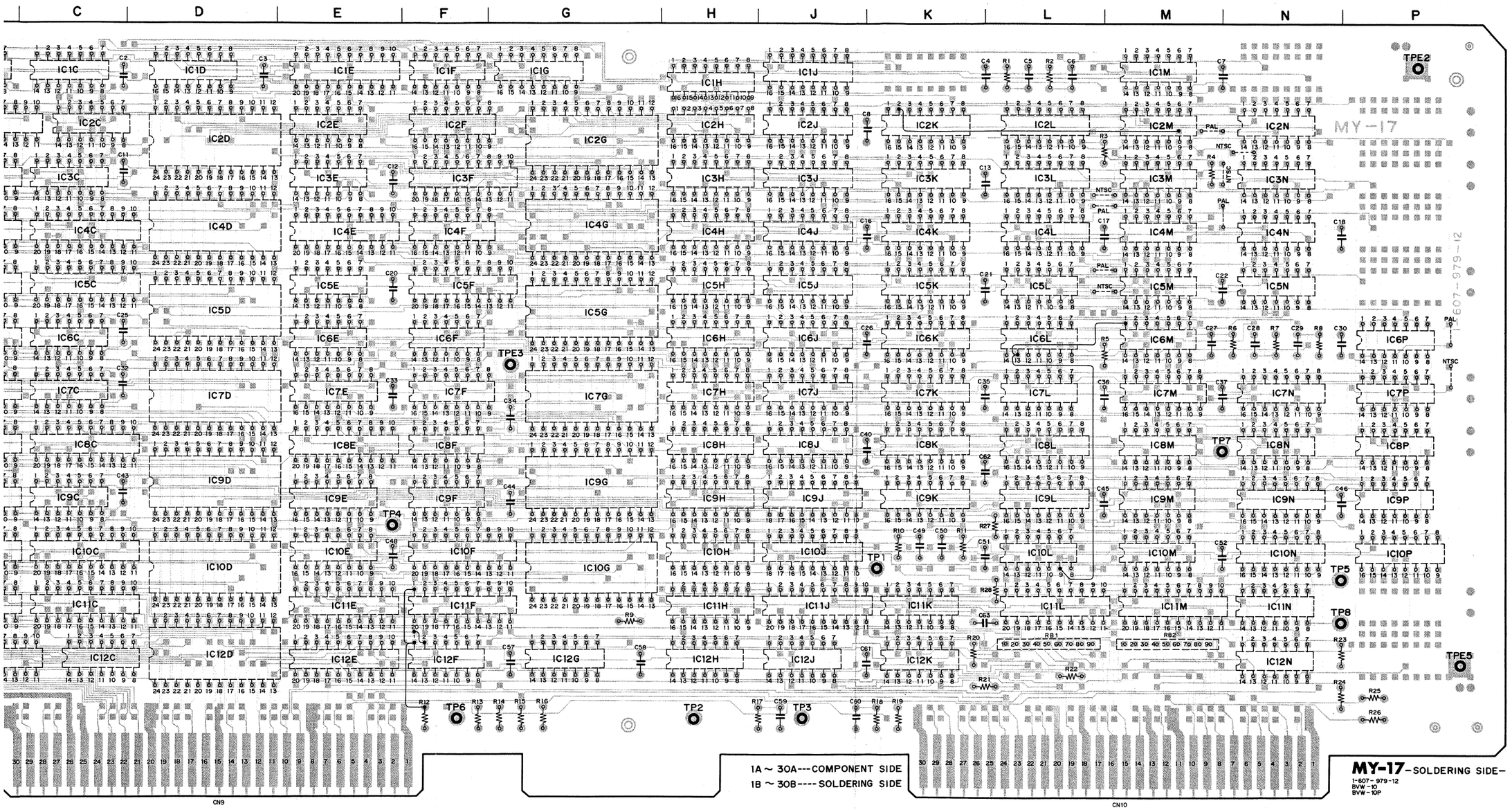

TP1	K - 10
TP2	H - 12
TP3	J - 12
TP4	E - 9
TP5	P - 11
TP6	F - 12
TP7	N - 8
TP8	P - 11
TPE1	A - 2
TPE2	P - 1
TPE3	G - 7
TPE4	A - 12
TPE5	P - 12

7 /3) (VIDEO TBC)

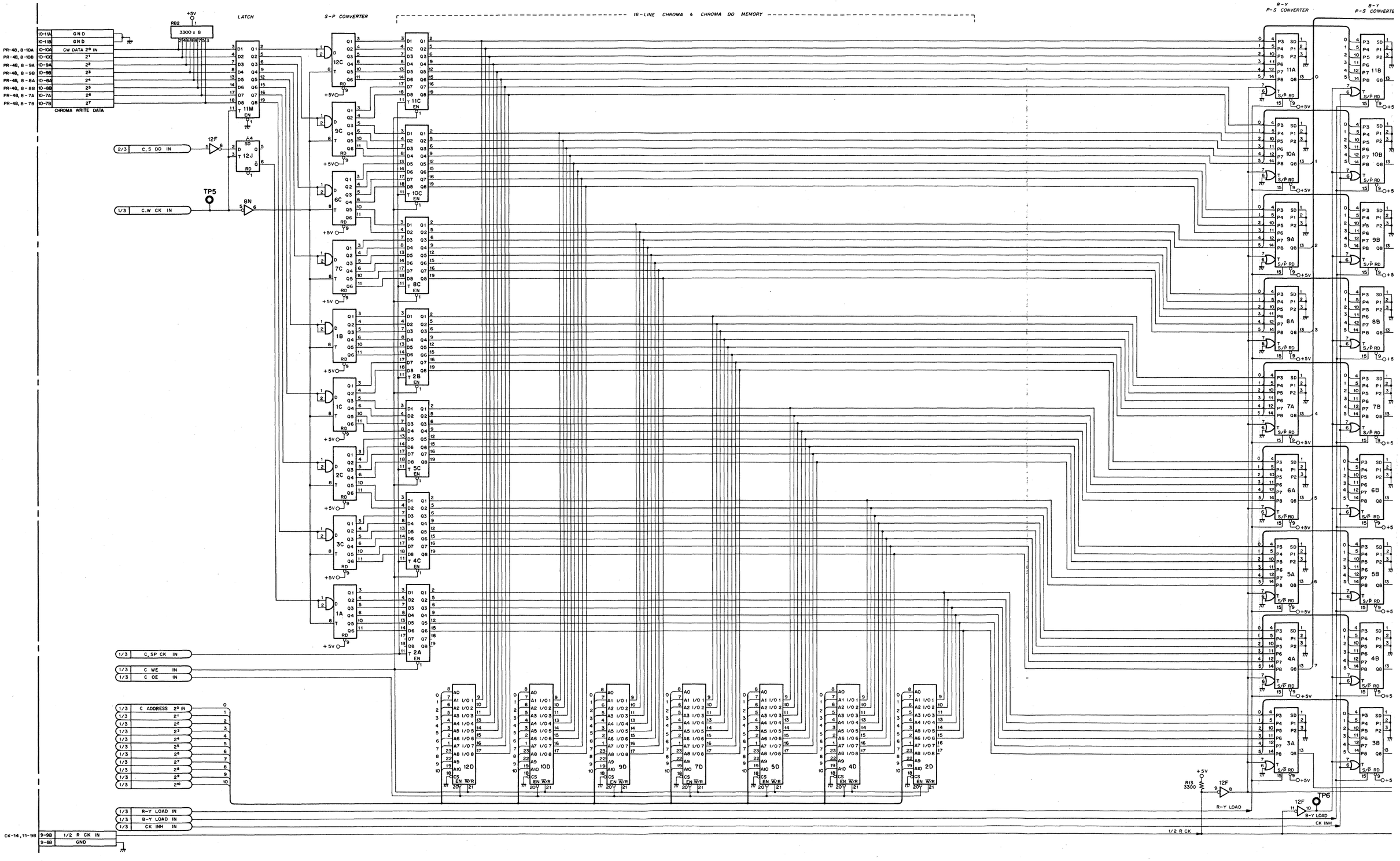
LATCH
S-P CONVERTER
16-LINE CHROMA & CHROMA DO MEMORY
R-Y P-S CONVERTER
B-Y P-S CONVERTER
CHROMA WRITE DATA
C.S DO IN
C.W CK IN
C.SP CK IN
C WE IN
C OE IN
C ADDRESS
R-Y LOAD IN
B-Y LOAD IN
CK INH IN
1/2 R CK IN
GND
R-Y LOAD
B-Y LOAD
CK INH
1/2 R CK

MY-17 (3/3)

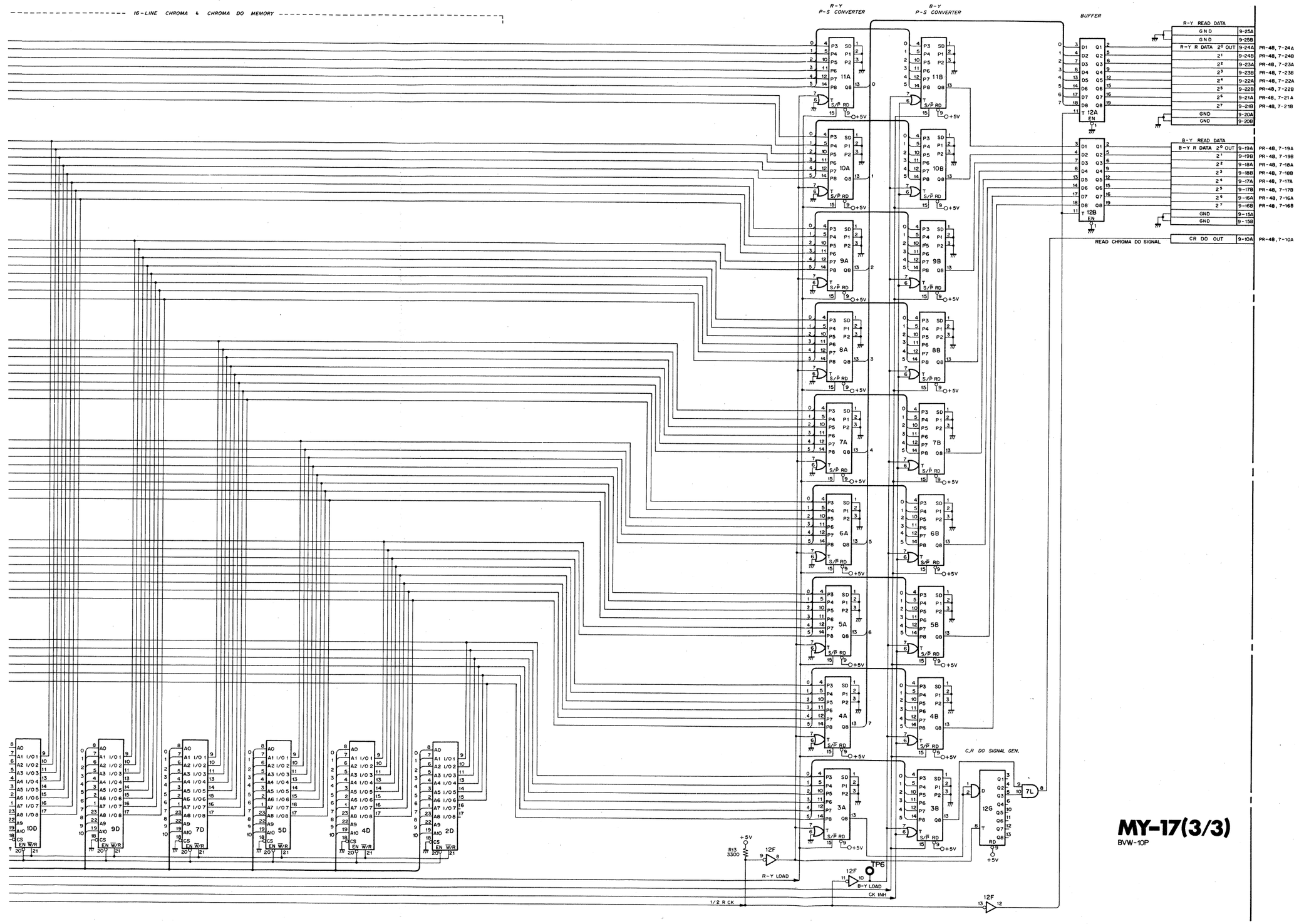

MY-17(3/3)
BVW-10P

PR-48 (VIDEO TBC)

Ref. No.	Type	Pin No. −11V	−5V	GND	+5V	+11V	+12V
IC 1	BX365A	9		4,7		3	
IC 2	H11-201-5	4		5		13	
IC 3	TL082CP	4				8	
IC 4	CX20052		14,19,23	4,13,15,20,22			
IC 5	HD10105		8		1,16		
IC 7	HD10125		8	16	9		
IC 8	HD10125		8	16	9		
IC 9	μPC4557C	4				8	
IC 10	BX365A	9		4,7		3	
IC 11	TL082CP	4				8	
IC 12	H11-201-5	4		5		13	
IC 13	TL082CP	4				8	
IC 14	CX20052		4,19,23	4,13,15,20,22			
IC 15	HD10105		8		1,16		
IC 17	HD10125		8	16	9		
IC 18	HD10125		8	16	9		
IC 19	BX365A	9		4,7		3	
IC 20	μPC319C	6				11	
IC 21	BX365A	9		4,7		3	
IC 22	μPC319C	6		3,8		11	
IC 23	HA1-4905-5	5		9	1	13	
IC 24	TL084CN	11				4	
IC 25	H11-201-5	4		5		13	
IC 26	SN74LS123N			8	16		
IC 27	H11-201-5	4		5		13	
IC 28	SN74LS221N			8	16		
IC 29	SN75454BP			4	8		
IC 30	HA1-4905-5	5		9	1	13	
IC 31	TL084CN	11				4	
IC 32	HA1-4905-5	5		9	1	13	
IC 33	H11-201-5	4		5		13	
IC 34	SN74LS00N			7	14		
IC 35	SN74LS74AN			7	14		
IC 36	SN74LS221N			8	16		
IC 37	SN74LS20N			7	14		
IC 38	TC4528BP			8	16		
IC 39	SN74LS221N			8	16		
IC 40	TC4022BP			8	16		
IC 41	BX365A	9		4,7		3	
IC 42	BX365A	9		4,7		3	
IC 43	BX365A	9		4,7		3	
IC 44	CX20051A			1,3,15,24,27	14,21,22,28		
IC 45	CX20051A			1,3,15,24,27	14,21,22,28		
IC 46	CX20051A			1,3,15,24,27	14,21,22,28		
IC 47	μPC4557C	4				8	
IC 48	TL082CP	4				8	
IC 49	TL607CP	5		1		8	
IC 50	TL607CP	5		1		8	
IC 51	TL082CP	4				8	
IC 52	μPC4557C	4				8	
IC 53	MC10198L			8	1,16		
IC 54	SN74S32N			7	14		
IC 55	SN74LS163AN			8	16		
IC 56	SN74273N			10	20		
IC 57	MBM2149L-55			9	18		
IC 58	MBM2149L-55			9	18		
IC 59	MBM2149L-55			9	18		
IC 60	MBM2149L-55			9	18		
IC 61	SN74273N			10	20		
IC 62	SN74LS04N			7	14		
IC 63	SN74LS113AN			7	14		
IC 64	SN74LS374N			10	20		
IC 65	SN74LS163AN			8	16		
IC 66	SN74LS273N			10	20		
IC 67	SN74LS273N			10	20		
IC 68	SN74LS273N			10	20		
IC 69	SN74LS374N			10	20		
IC 72	μPC7905H			3			1

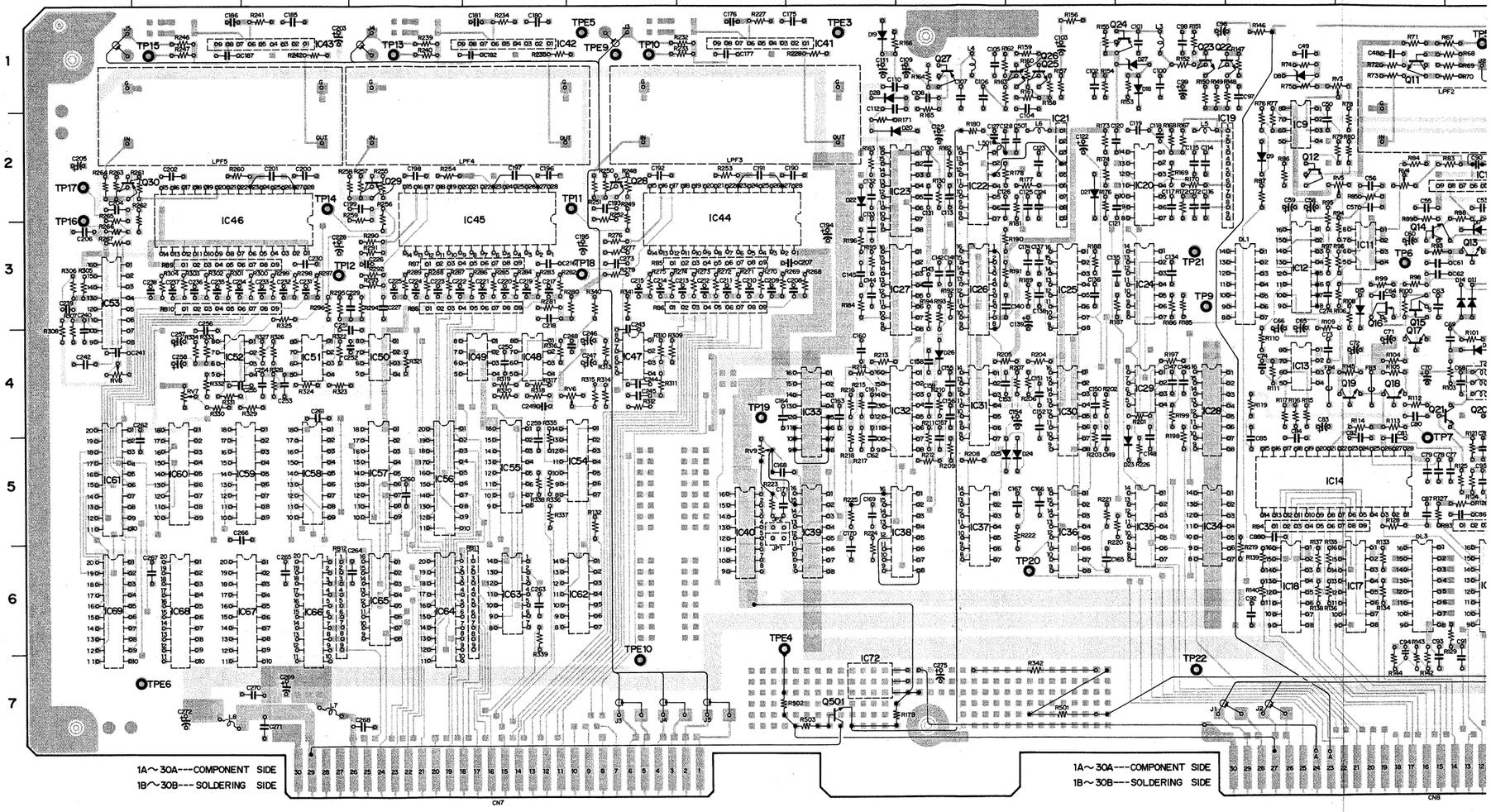

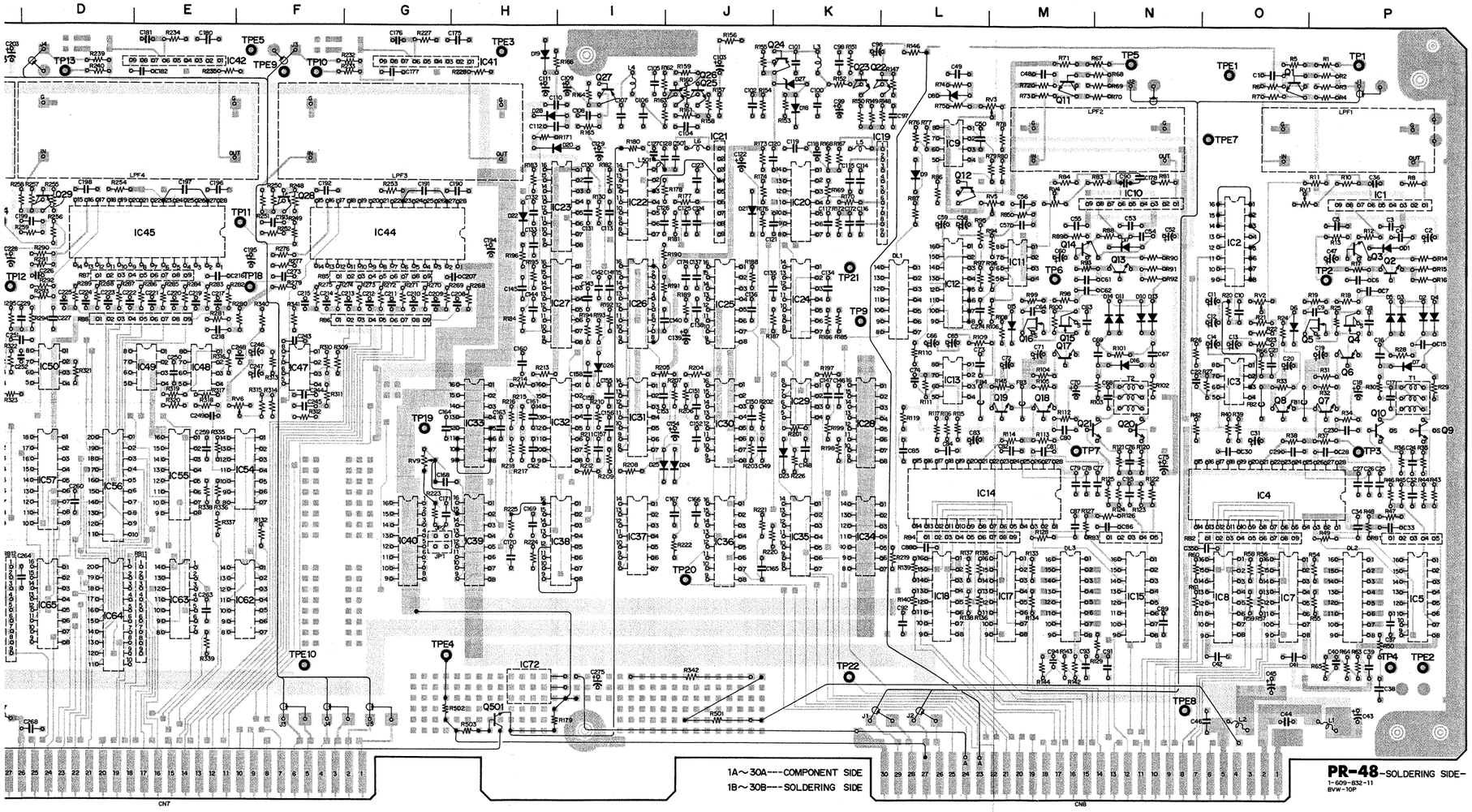

D1	P-3	IC41	G-1	RV1	O-2
D2	P-3	IC42	E-1	RV2	O-3
D3	P-3	IC43	C-1	RV3	M-1
D4	P-3	IC44	G-2	RV4	M-2
D5	P-3	IC45	E-2	RV5	M-2
D6	O-3	IC46	B-2	RV6	F-4
D7	P-4	IC47	F-4	RV7	B-4
D8	L-1	IC48	E-4	RV8	A-4
D9	L-2	IC49	E-4	RV9	G-5
D10	N-3	IC50	D-4		
D11	N-3	IC51	C-4	T1	P-4
D13	N-3	IC52	B-4	T2	N-4
D14	N-3	IC53	A-3		
D15	M-3	IC54	F-5	TP1	P-1
D16	N-4	IC55	E-5	TP2	P-3
D17	N-3	IC56	D-5	TP3	P-5
D18	K-1	IC57	D-5	TP4	P-7
D19	H-1	IC58	C-5	TP5	N-1
D20	I-2	IC59	C-5	TP6	M-3
D21	J-2	IC60	B-5	TP7	M-5
D22	H-2	IC61	A-5	TP9	K-3
D23	K-5	IC62	F-6	TP10	F-1
D24	J-5	IC63	E-6	TP11	F-2
D25	J-5	IC64	D-6	TP12	C-3
D26	I-4	IC65	D-6	TP13	D-1
D27	K-1	IC66	C-6	TP14	C-2
D28	H-1	IC67	C-6	TP15	B-1
		IC68	B-6	TP16	A-2
DL1	L-3	IC69	A-6	TP17	A-2
DL2	P-6	IC72	H-7	TP18	F-3
DL3	M-6			TP19	G-4
		LPF1	P-1	TP20	J-6
IC1	P-2	LPF2	N-2	TP21	K-3
IC2	O-3	LPF3	G-2	TP22	K-7
IC3	O-4	LPF4	E-2		
IC4	O-5	LPF5	B-2	TPE1	O-1
IC5	P-6			TPE2	P-7
IC7	O-6	Q1	O-1	TPE3	H-1
IC8	O-6	Q2	P-3	TPE4	G-6
IC9	L-2	Q3	P-3	TPE5	F-1
IC10	N-2	Q4	P-3	TPE6	B-7
IC11	M-3	Q5	P-3	TPE7	O-2
IC12	L-3	Q6	P-4	TPE8	N-7
IC13	L-4	Q7	P-4	TPE9	F-1
IC14	M-5	Q8	O-4	TPE10	F-7
IC15	N-6	Q9	P-4		
IC17	M-6	Q10	P-4		
IC18	L-6	Q11	M-1		
IC19	L-2	Q12	L-2		
IC20	K-2	Q13	N-3		
IC21	J-2	Q14	M-3		
IC22	I-2	Q15	M-3		
IC23	I-2	Q16	M-3		
IC24	K-3	Q17	M-4		
IC25	J-3	Q18	M-4		
IC26	I-3	Q19	M-4		
IC27	I-3	Q20	N-4		
IC28	K-4	Q21	N-4		
IC29	K-4	Q22	K-1		
IC30	J-4	Q23	K-1		
IC31	I-4	Q24	K-1		
IC32	I-4	Q25	J-1		
IC33	H-4	Q26	J-1		
IC34	K-5	Q27	I-1		
IC35	K-5	Q28	F-2		
IC36	J-5	Q29	D-2		
IC37	I-5	Q30	A-2		
IC38	I-5				
IC39	H-5				
IC40	G-5				

18 1/3) (VIDEO TBC)

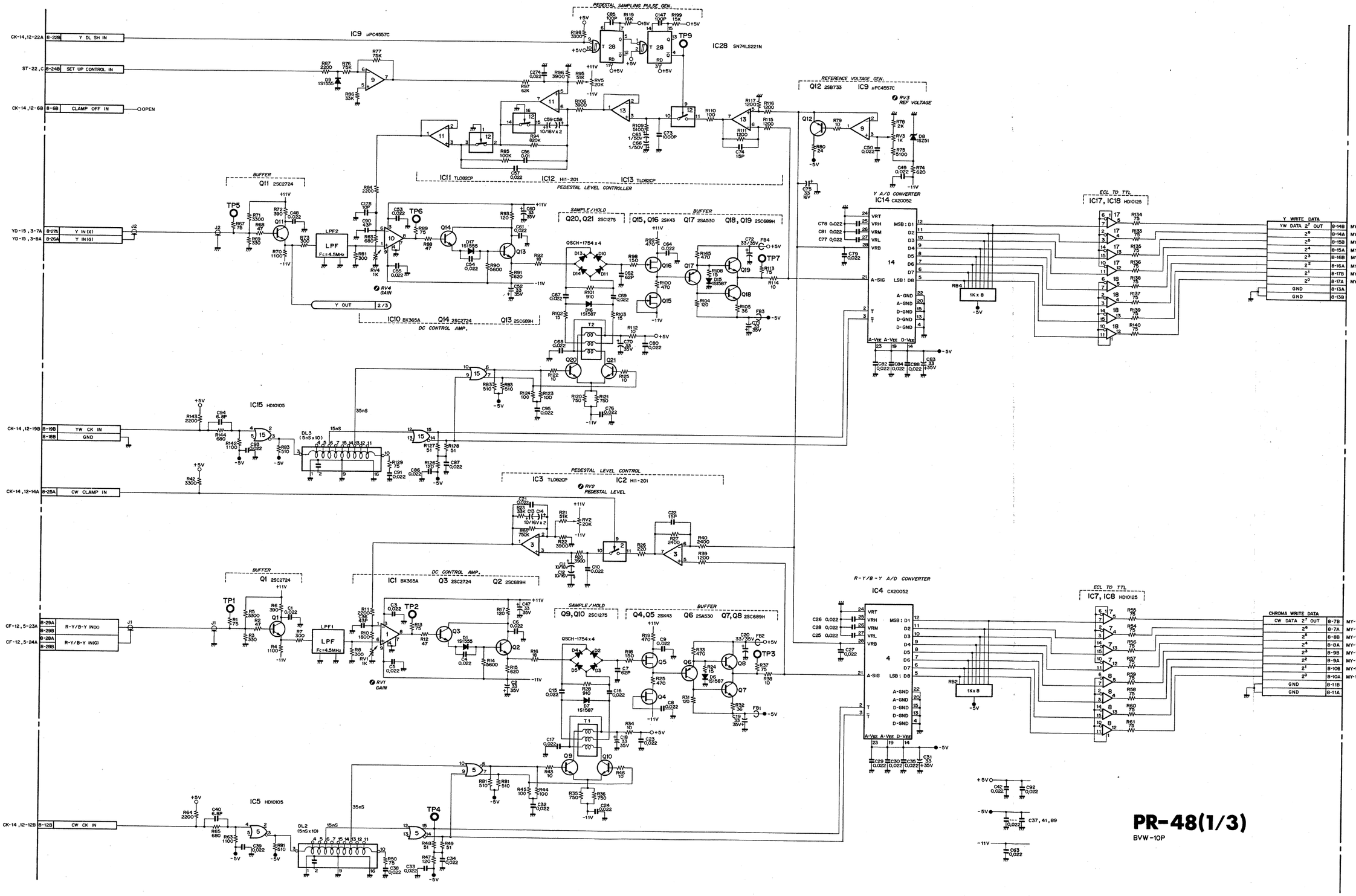

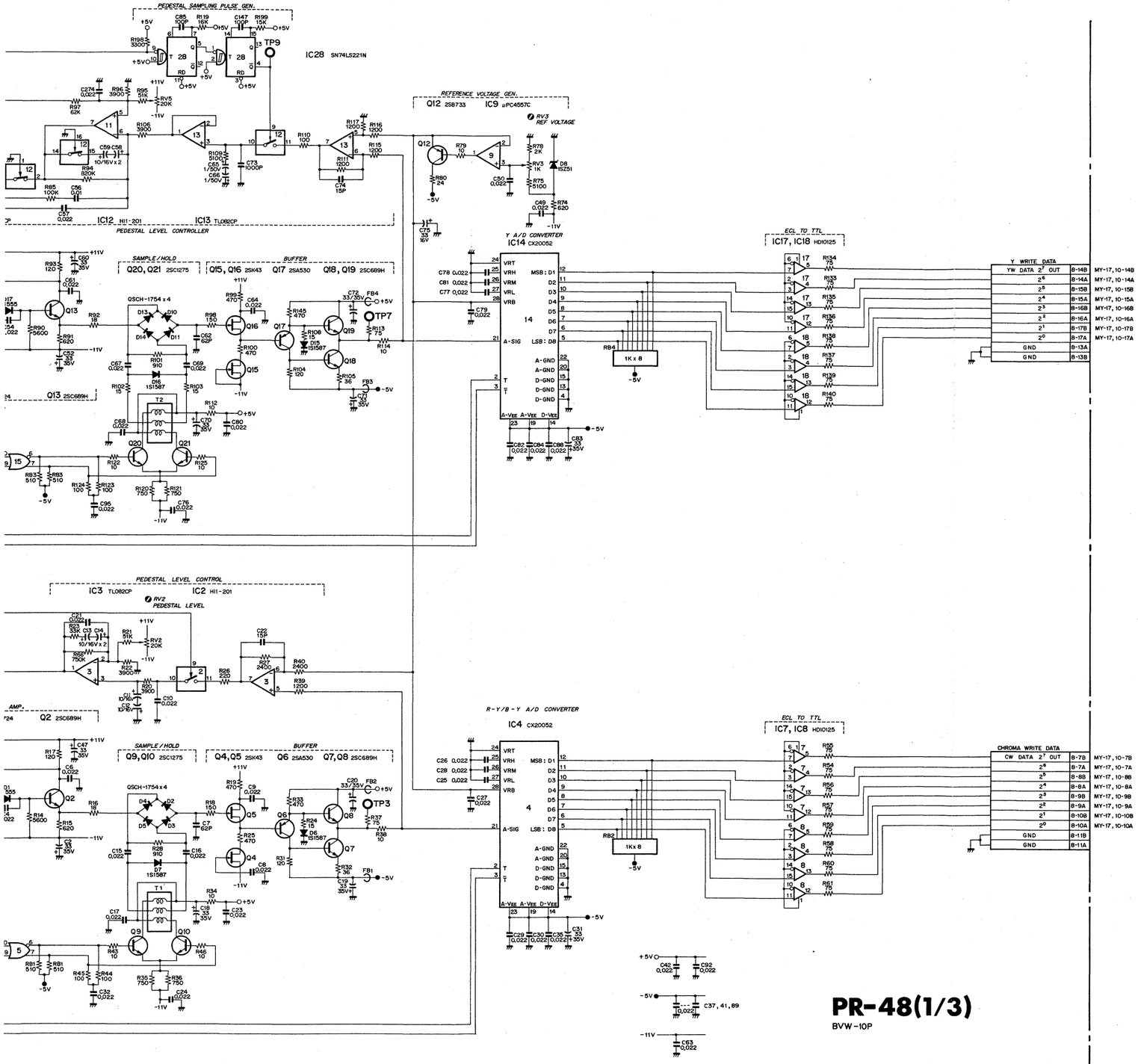
PEDESTAL SAMPLING PULSE GEN.
IC28 SN74LS221N
TP9
REFERENCE VOLTAGE GEN.
Q12 2SB733
IC9 μPC4557C
RV3 REF VOLTAGE
IC12 HI1-201
IC13 TL082CP
PEDESTAL LEVEL CONTROLLER
Y A/D CONVERTER
IC14 CX20052
ECL TO TTL
IC17, IC18 HD10125
SAMPLE/HOLD
Q20, Q21 2SC1275
BUFFER
Q15, Q16 2SK43
Q17 2SA530
Q18, Q19 2SC689H
Q13 2SC689H
QSCH-1754 x 4
TP7
Y WRITE DATA
YW DATA 2⁷ OUT
GND
PEDESTAL LEVEL CONTROL
IC3 TL082CP
IC2 HI1-201
RV2 PEDESTAL LEVEL
Q2 2SC689H
R-Y/B-Y A/D CONVERTER
IC4 CX20052
Q9, Q10 2SC1275
Q4, Q5 2SK43
Q6 2SA530
Q7, Q8 2SC689H
TP3
CHROMA WRITE DATA
CW DATA 2⁷ OUT
PR-48(1/3)
BVW-10P

PR-48 (VIDEO TBC)

Ref. No.	Type	Pin No.					
		−11V	−5V	GND	+5V	+11V	+12V
IC 1	BX365A	9		4,7		3	
IC 2	HI1-201-5	4		5		13	
IC 3	TL082CP	4				8	
IC 4	CX20052		14,19,23	4,13,15,20,22			
IC 5	HD10105		8		1,16		
IC 7	HD10125		8	16	9		
IC 8	HD10125		8	16	9		
IC 9	μPC4557C	4				8	
IC 10	BX365A	9		4,7		3	
IC 11	TL082CP	4				8	
IC 12	HI1-201-5	4		5		13	
IC 13	TL082CP	4				8	
IC 14	CX20052		4,19,23	4,13,15,20,22			
IC 15	HD10105		8		1,16		
IC 17	HD10125		8	16	9		
IC 18	HD10125		8	16	9		
IC 19	BX365A	9		4,7		3	
IC 20	μPC319C	6				11	
IC 21	BX365A	9		4,7		3	
IC 22	μPC319C	6		3,8		11	
IC 23	HA1-4905-5	5		9	1	13	
IC 24	TL084CN	11				4	
IC 25	HI1-201-5	4		5		13	
IC 26	SN74LS123N			8	16		
IC 27	HI1-201-5	4		5		13	
IC 28	SN74LS221N			8	16		
IC 29	SN75454BP			4	8		
IC 30	HA1-4905-5	5		9	1	13	
IC 31	TL084CN	11				4	
IC 32	HA1-4905-5	5		9	1	13	
IC 33	HI1-201-5	4		5		13	
IC 34	SN74LS00N			7	14		
IC 35	SN74LS74AN			7	14		
IC 36	SN74LS221N			8	16		
IC 37	SN74LS20N			7	14		
IC 38	TC4528BP			8	16		
IC 39	SN74LS221N			8	16		
IC 40	TC4022BP			8	16		
IC 41	BX365A	9		4,7		3	
IC 42	BX365A	9		4,7		3	
IC 43	BX365A	9		4,7		3	
IC 44	CX20051A			1,3,15,24,27	14,21,22,28		
IC 45	CX20051A			1,3,15,24,27	14,21,22,28		
IC 46	CX20051A			1,3,15,24,27	14,21,22,28		
IC 47	μPC4557C	4				8	
IC 48	TL082CP	4				8	
IC 49	TL607CP	5		1		8	
IC 50	TL607CP	5		1		8	
IC 51	TL082CP	4				8	
IC 52	μPC4557C	4				8	
IC 53	MC10198L			8	1,16		
IC 54	SN74S32N			7	14		
IC 55	SN74LS163AN			8	16		
IC 56	SN74273N			10	20		
IC 57	MBM2149L-55			9	18		
IC 58	MBM2149L-55			9	18		
IC 59	MBM2149L-55			9	18		
IC 60	MBM2149L-55			9	18		
IC 61	SN74273N			10	20		
IC 62	SN74LS04N			7	14		
IC 63	SN74LS113AN			7	14		
IC 64	SN74LS374N			10	20		
IC 65	SN74LS163AN			8	16		
IC 66	SN74LS273N			10	20		
IC 67	SN74LS273N			10	20		
IC 68	SN74LS273N			10	20		
IC 69	SN74LS374N			10	20		
IC 72	μPC7905H			3			1

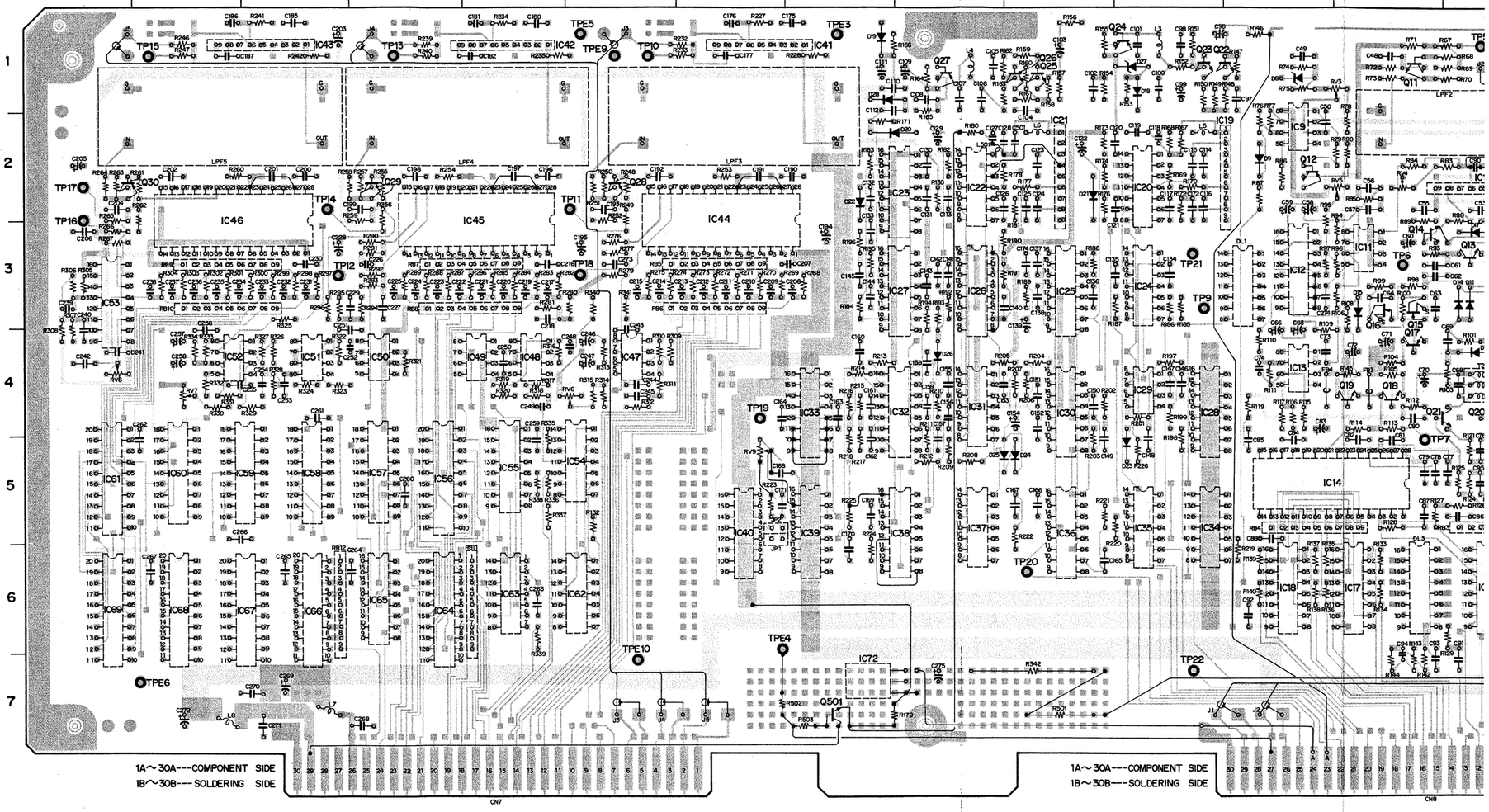

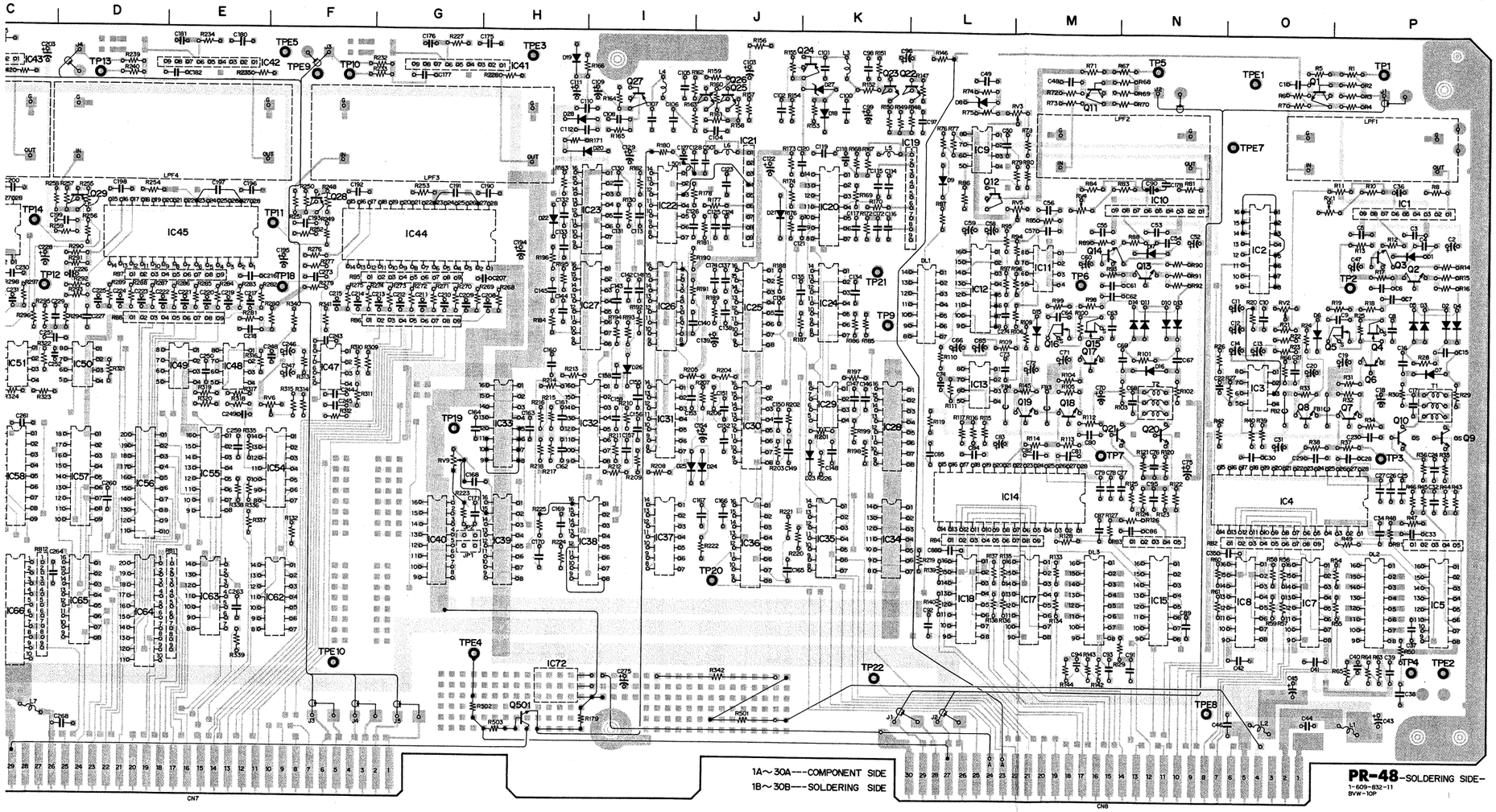

D1	P-3	IC41	G-1	RV1	O-2
D2	P-3	IC42	E-1	RV2	O-3
D3	P-3	IC43	C-1	RV3	M-1
D4	P-3	IC44	G-2	RV4	M-2
D5	P-3	IC45	E-2	RV5	M-2
D6	O-3	IC46	B-2	RV6	F-4
D7	P-4	IC47	F-4	RV7	B-4
D8	L-1	IC48	E-4	RV8	A-4
D9	L-2	IC49	E-4	RV9	G-5
D10	N-3	IC50	D-4		
D11	N-3	IC51	C-4	T1	P-4
D13	N-3	IC52	B-4	T2	N-4
D14	N-3	IC53	A-3		
D15	M-3	IC54	F-5	TP1	P-1
D16	N-4	IC55	E-5	TP2	P-3
D17	N-3	IC56	D-5	TP3	P-5
D18	K-1	IC57	D-5	TP4	P-7
D19	H-1	IC58	C-5	TP5	N-1
D20	I-2	IC59	C-5	TP6	M-3
D21	J-2	IC60	B-5	TP7	M-5
D22	H-2	IC61	A-5	TP9	K-3
D23	K-5	IC62	F-6	TP10	F-1
D24	J-5	IC63	E-6	TP11	F-2
D25	J-5	IC64	D-6	TP12	C-3
D26	I-4	IC65	D-6	TP13	D-1
D27	K-1	IC66	C-6	TP14	C-2
D28	H-1	IC67	C-6	TP15	B-1
		IC68	B-6	TP16	A-2
DL1	L-3	IC69	A-6	TP17	A-2
DL2	P-6	IC72	H-7	TP18	F-3
DL3	M-6			TP19	G-4
		LPF1	P-1	TP20	J-6
IC1	P-2	LPF2	N-2	TP21	K-3
IC2	O-3	LPF3	G-2	TP22	K-7
IC3	O-4	LPF4	E-2		
IC4	O-5	LPF5	B-2	TPE1	O-1
IC5	P-6			TPE2	P-7
IC7	O-6	Q1	O-1	TPE3	H-1
IC8	O-6	Q2	P-3	TPE4	G-6
IC9	L-2	Q3	P-3	TPE5	F-1
IC10	N-2	Q4	P-3	TPE6	B-7
IC11	M-3	Q5	P-3	TPE7	O-2
IC12	L-3	Q6	P-4	TPE8	N-7
IC13	L-4	Q7	P-4	TPE9	F-1
IC14	M-5	Q8	O-4	TPE10	F-7
IC15	N-6	Q9	P-4		
IC17	M-6	Q10	P-4		
IC18	L-6	Q11	M-1		
IC19	L-2	Q12	L-2		
IC20	K-2	Q13	N-3		
IC21	J-2	Q14	M-3		
IC22	I-2	Q15	M-3		
IC23	I-2	Q16	M-3		
IC24	K-3	Q17	M-4		
IC25	J-3	Q18	M-4		
IC26	I-3	Q19	M-4		
IC27	I-3	Q20	N-4		
IC28	K-4	Q21	N-4		
IC29	K-4	Q22	K-1		
IC30	J-4	Q23	K-1		
IC31	I-4	Q24	K-1		
IC32	I-4	Q25	J-1		
IC33	H-4	Q26	J-1		
IC34	K-5	Q27	I-1		
IC35	K-5	Q28	F-2		
IC36	J-5	Q29	D-2		
IC37	I-5	Q30	A-2		
IC38	I-5				
IC39	H-5				
IC40	G-5				

8 2/3) (VIDEO TBC)

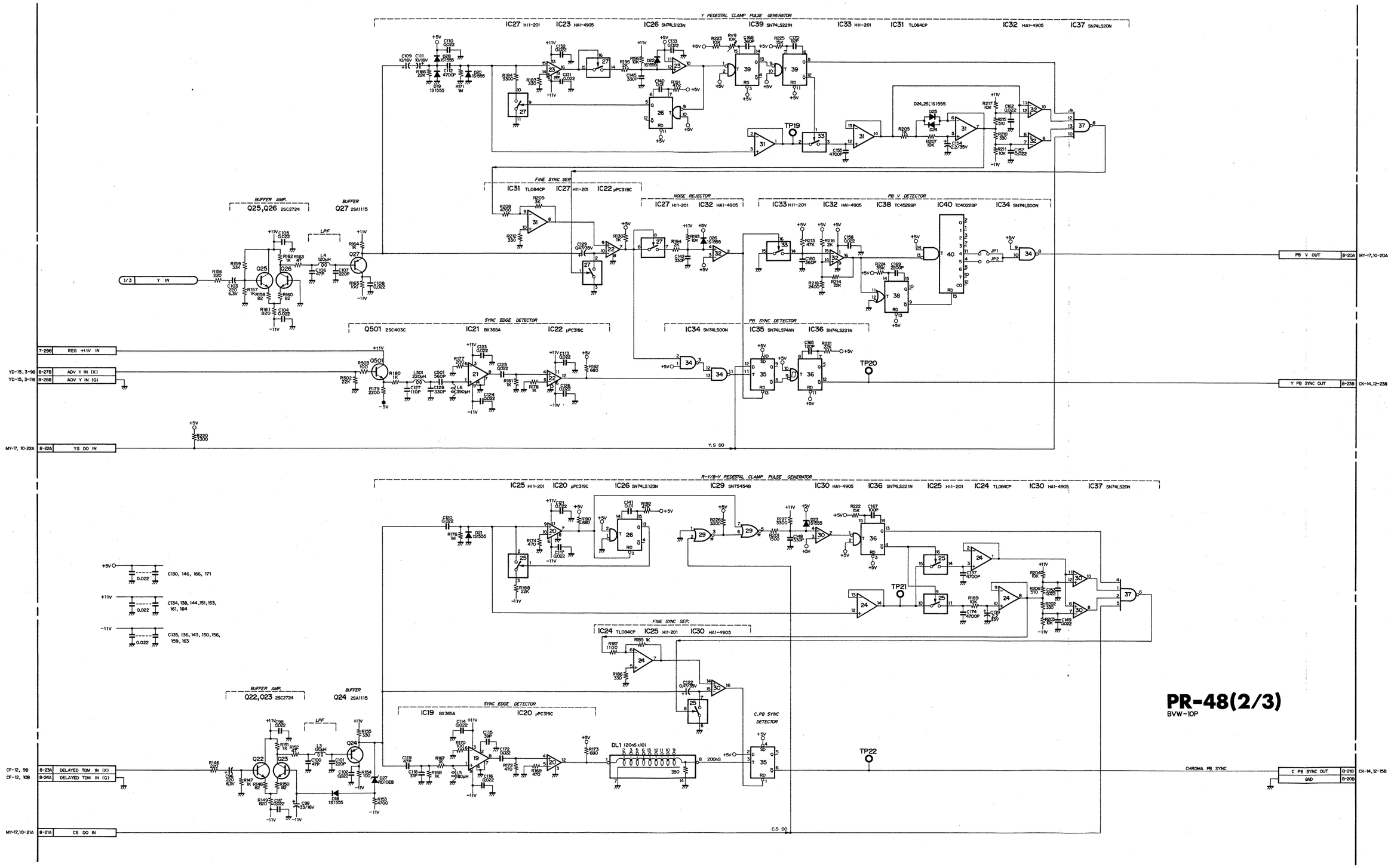

PR-48 (2/3)

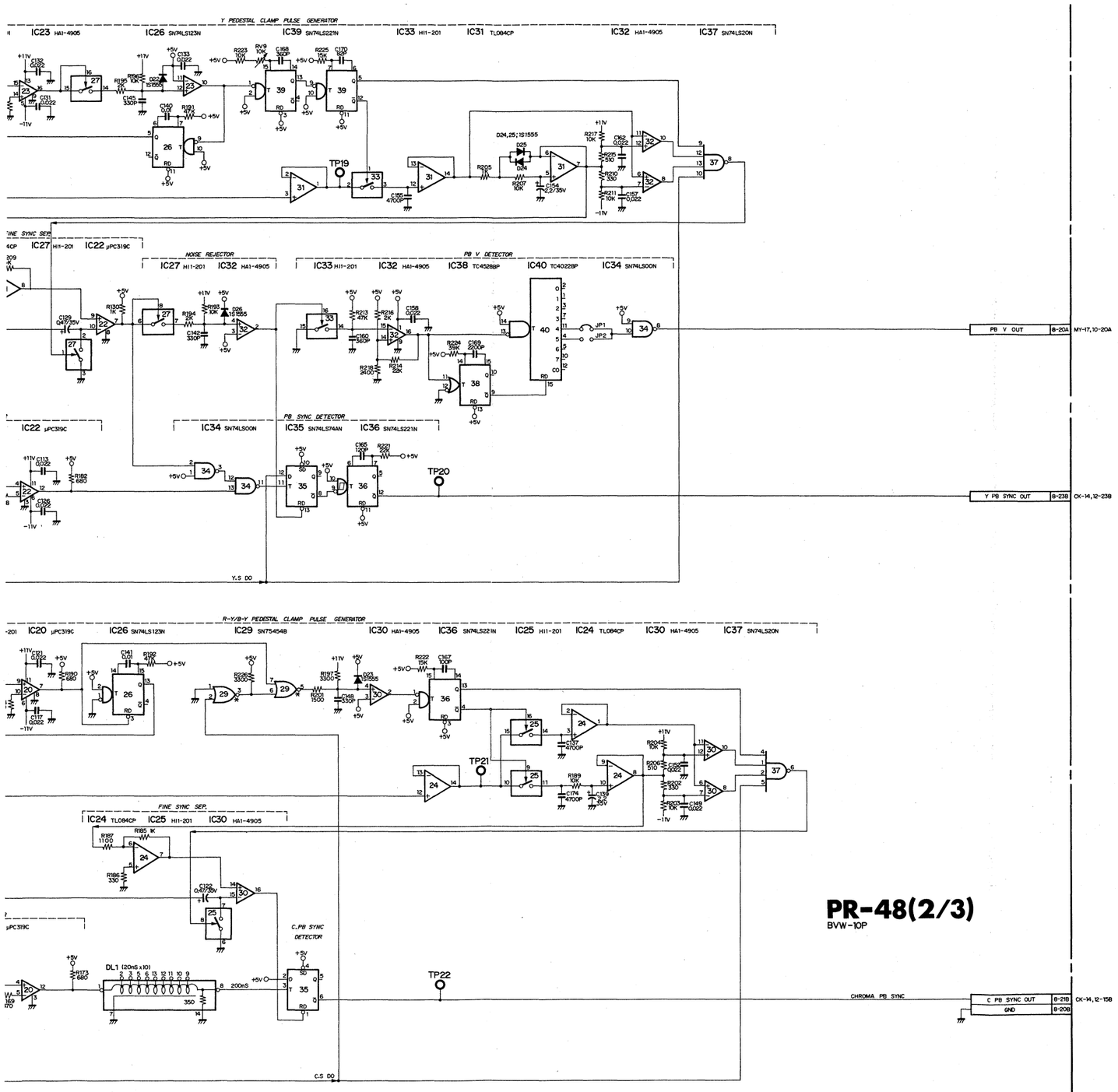

PR-48(2/3)
BVW-10P

PR-48 (VIDEO TBC)

Ref. No.	Type	Pin No. −11V	−5V	GND	+5V	+11V	+12V
IC 1	BX365A	9		4,7		3	
IC 2	HI1-201-5	4		5		13	
IC 3	TL082CP	4				8	
IC 4	CX20052		14,19,23	4,13,15,20,22			
IC 5	HD10105		8		1,16		
IC 7	HD10125		8	16	9		
IC 8	HD10125		8	16	9		
IC 9	μPC4557C	4				8	
IC 10	BX365A	9		4,7		3	
IC 11	TL082CP	4				8	
IC 12	HI1-201-5	4		5		13	
IC 13	TL082CP	4				8	
IC 14	CX20052		4,19,23	4,13,15,20,22			
IC 15	HD10105		8		1,16		
IC 17	HD10125		8	16	9		
IC 18	HD10125		8	16	9		
IC 19	BX365A	9		4,7		3	
IC 20	μPC319C	6				11	
IC 21	BX365A	9		4,7		3	
IC 22	μPC319C	6		3,8		11	
IC 23	HA1-4905-5	5		9	1	13	
IC 24	TL084CN	11				4	
IC 25	HI1-201-5	4		5		13	
IC 26	SN74LS123N			8	16		
IC 27	HI1-201-5	4		5		13	
IC 28	SN74LS221N			8	16		
IC 29	SN75454BP			4	8		
IC 30	HA1-4905-5	5		9	1	13	
IC 31	TL084CN	11				4	
IC 32	HA1-4905-5	5		9	1	13	
IC 33	HI1-201-5	4		5		13	
IC 34	SN74LS00N			7	14		
IC 35	SN74LS74AN			7	14		
IC 36	SN74LS221N			8	16		
IC 37	SN74LS20N			7	14		
IC 38	TC4528BP			8	16		
IC 39	SN74LS221N			8	16		
IC 40	TC4022BP			8	16		
IC 41	BX365A	9		4,7		3	
IC 42	BX365A	9		4,7		3	
IC 43	BX365A	9		4,7		3	
IC 44	CX20051A			1,3,15,24,27	14,21,22,28		
IC 45	CX20051A			1,3,15,24,27	14,21,22,28		
IC 46	CX20051A			1,3,15,24,27	14,21,22,28		
IC 47	μPC4557C	4				8	
IC 48	TL082CP	4				8	
IC 49	TL607CP	5		1		8	
IC 50	TL607CP	5		1		8	
IC 51	TL082CP	4				8	
IC 52	μPC4557C	4				8	
IC 53	MC10198L			8	1,16		
IC 54	SN74S32N			7	14		
IC 55	SN74LS163AN			8	16		
IC 56	SN74273N			10	20		
IC 57	MBM2149L-55			9	18		
IC 58	MBM2149L-55			9	18		
IC 59	MBM2149L-55			9	18		
IC 60	MBM2149L-55			9	18		
IC 61	SN74273N			10	20		
IC 62	SN74LS04N			7	14		
IC 63	SN74LS113AN			7	14		
IC 64	SN74LS374N			10	20		
IC 65	SN74LS163AN			8	16		
IC 66	SN74LS273N			10	20		
IC 67	SN74LS273N			10	20		
IC 68	SN74LS273N			10	20		
IC 69	SN74LS374N			10	20		
IC 72	μPC7905H			3			1

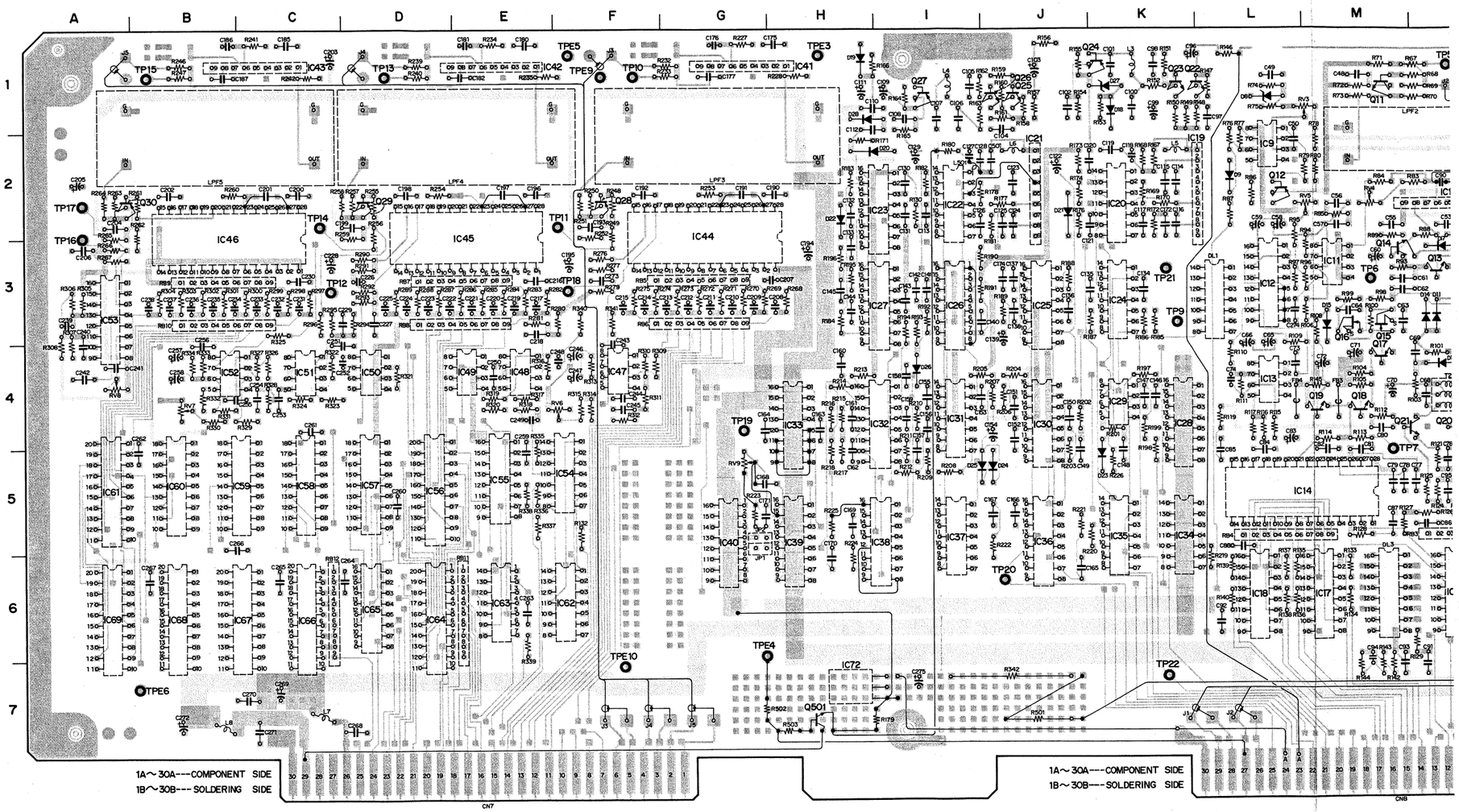

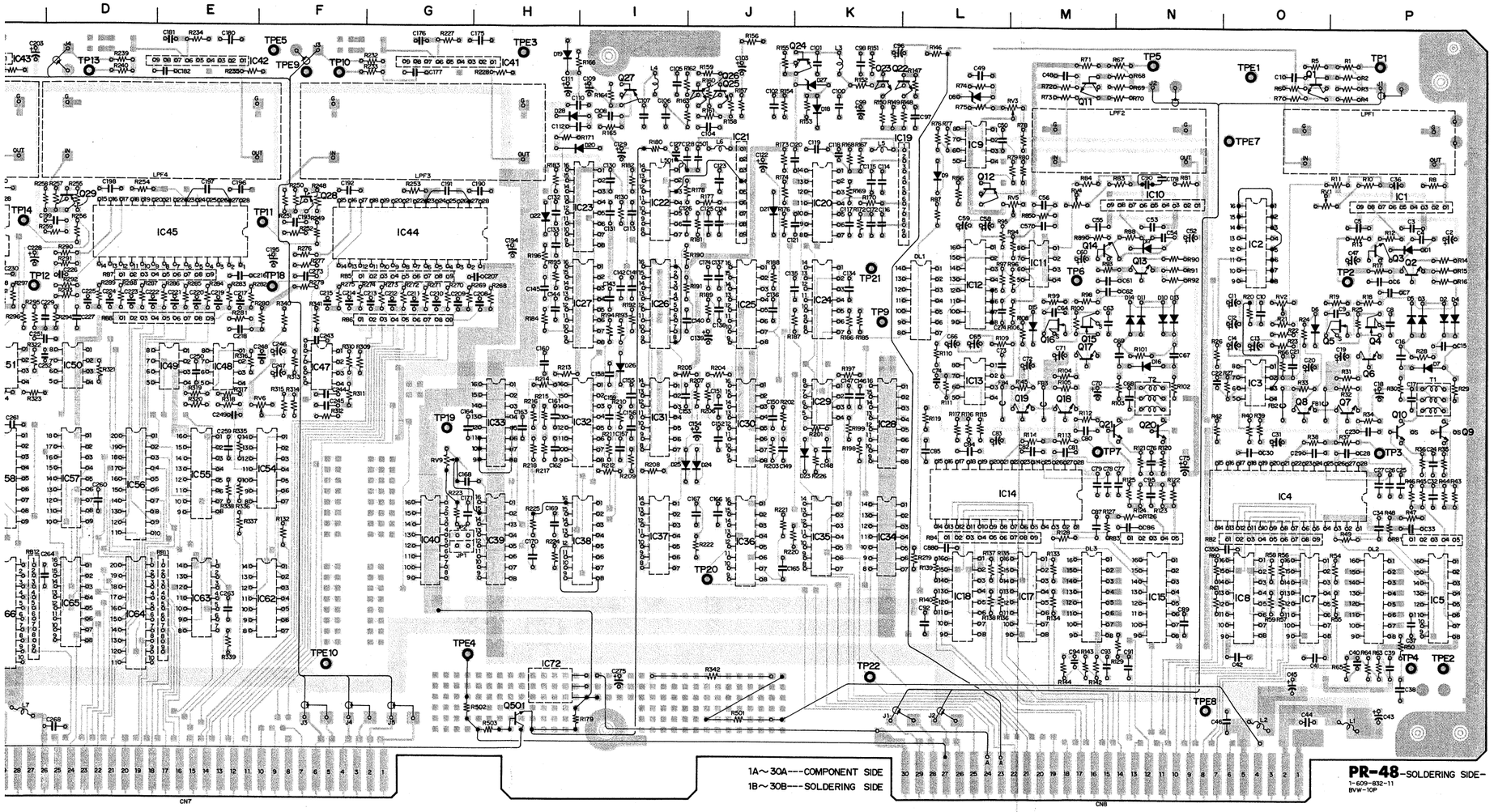

D1	P-3	IC41	G-1	RV1	O-2
D2	P-3	IC42	E-1	RV2	O-3
D3	P-3	IC43	C-1	RV3	M-1
D4	P-3	IC44	G-2	RV4	M-2
D5	P-3	IC45	E-2	RV5	M-2
D6	O-3	IC46	B-2	RV6	F-4
D7	P-4	IC47	F-4	RV7	B-4
D8	L-1	IC48	E-4	RV8	A-4
D9	L-2	IC49	E-4	RV9	G-5
D10	N-3	IC50	D-4		
D11	N-3	IC51	C-4	T1	P-4
D13	N-3	IC52	B-4	T2	N-4
D14	N-3	IC53	A-3		
D15	M-3	IC54	F-5	TP1	P-1
D16	N-4	IC55	E-5	TP2	P-3
D17	N-3	IC56	D-5	TP3	P-5
D18	K-1	IC57	D-5	TP4	P-7
D19	H-1	IC58	C-5	TP5	N-1
D20	I-2	IC59	C-5	TP6	M-3
D21	J-2	IC60	B-5	TP7	M-5
D22	H-2	IC61	A-5	TP9	K-3
D23	K-5	IC62	F-6	TP10	F-1
D24	J-5	IC63	E-6	TP11	F-2
D25	J-5	IC64	D-6	TP12	C-3
D26	I-4	IC65	D-6	TP13	D-1
D27	K-1	IC66	C-6	TP14	C-2
D28	H-1	IC67	C-6	TP15	B-1
		IC68	B-6	TP16	A-2
DL1	L-3	IC69	A-6	TP17	A-2
DL2	P-6	IC72	H-7	TP18	F-3
DL3	M-6			TP19	G-4
		LPF1	P-1	TP20	J-6
IC1	P-2	LPF2	N-2	TP21	K-3
IC2	O-3	LPF3	G-2	TP22	K-7
IC3	O-4	LPF4	E-2		
IC4	O-5	LPF5	B-2	TPE1	O-1
IC5	P-6			TPE2	P-7
IC7	O-6	Q1	O-1	TPE3	H-1
IC8	O-6	Q2	P-3	TPE4	G-6
IC9	L-2	Q3	P-3	TPE5	F-1
IC10	N-2	Q4	P-3	TPE6	B-7
IC11	M-3	Q5	P-3	TPE7	O-2
IC12	L-3	Q6	P-4	TPE8	N-7
IC13	L-4	Q7	P-4	TPE9	F-1
IC14	M-5	Q8	O-4	TPE10	F-7
IC15	N-6	Q9	P-4		
IC17	M-6	Q10	P-4		
IC18	L-6	Q11	M-1		
IC19	L-2	Q12	L-2		
IC20	K-2	Q13	N-3		
IC21	J-2	Q14	M-3		
IC22	I-2	Q15	M-3		
IC23	I-2	Q16	M-3		
IC24	K-3	Q17	M-4		
IC25	J-3	Q18	M-4		
IC26	I-3	Q19	M-4		
IC27	I-3	Q20	N-4		
IC28	K-4	Q21	N-4		
IC29	K-4	Q22	K-1		
IC30	J-4	Q23	K-1		
IC31	I-4	Q24	K-1		
IC32	I-4	Q25	J-1		
IC33	H-4	Q26	J-1		
IC34	K-5	Q27	I-1		
IC35	K-5	Q28	F-2		
IC36	J-5	Q29	D-2		
IC37	I-5	Q30	A-2		
IC38	I-5				
IC39	H-5				
IC40	G-5				

(3) (VIDEO TBC)

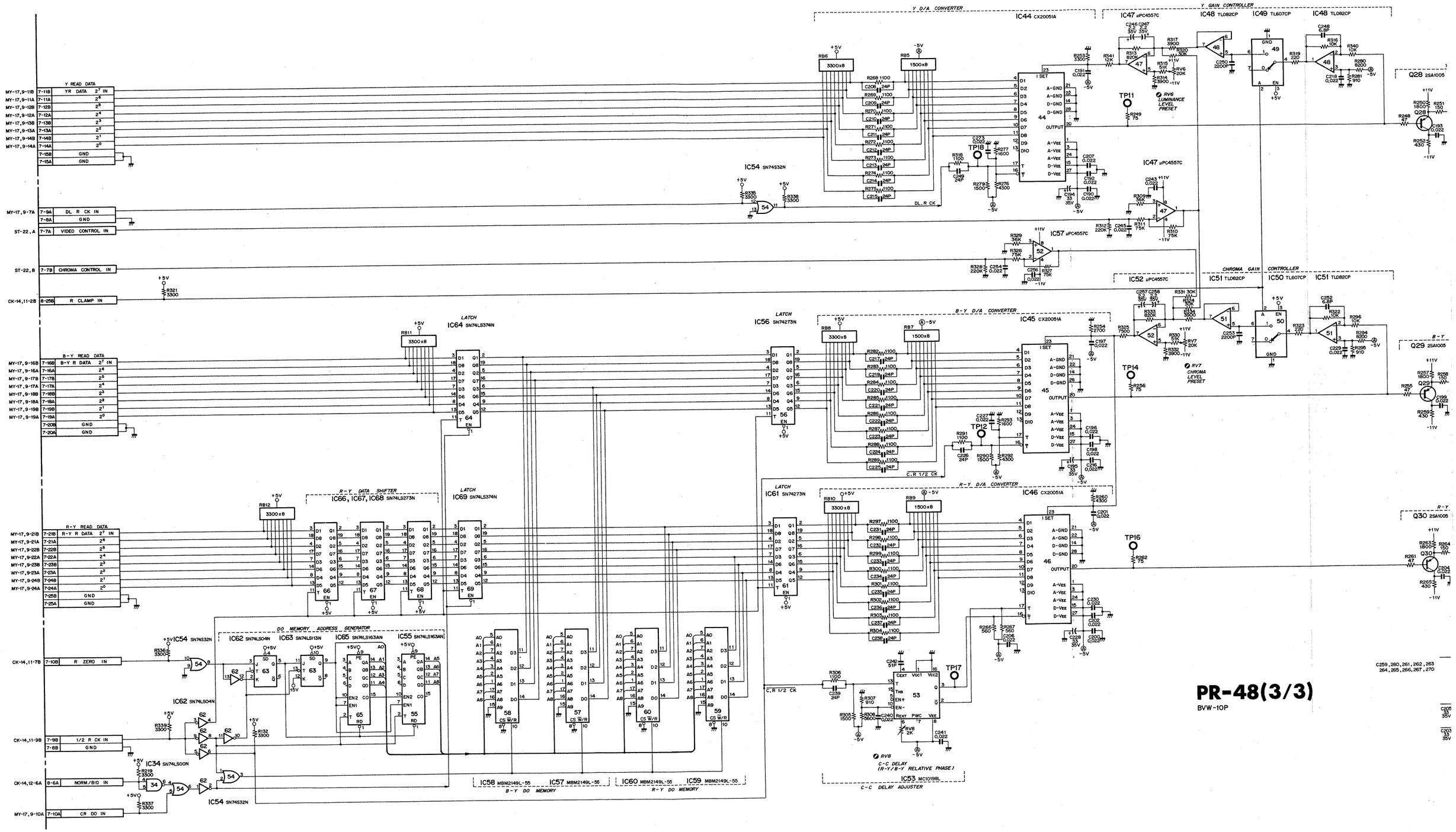

PR-48(3/3)
BVW-10P

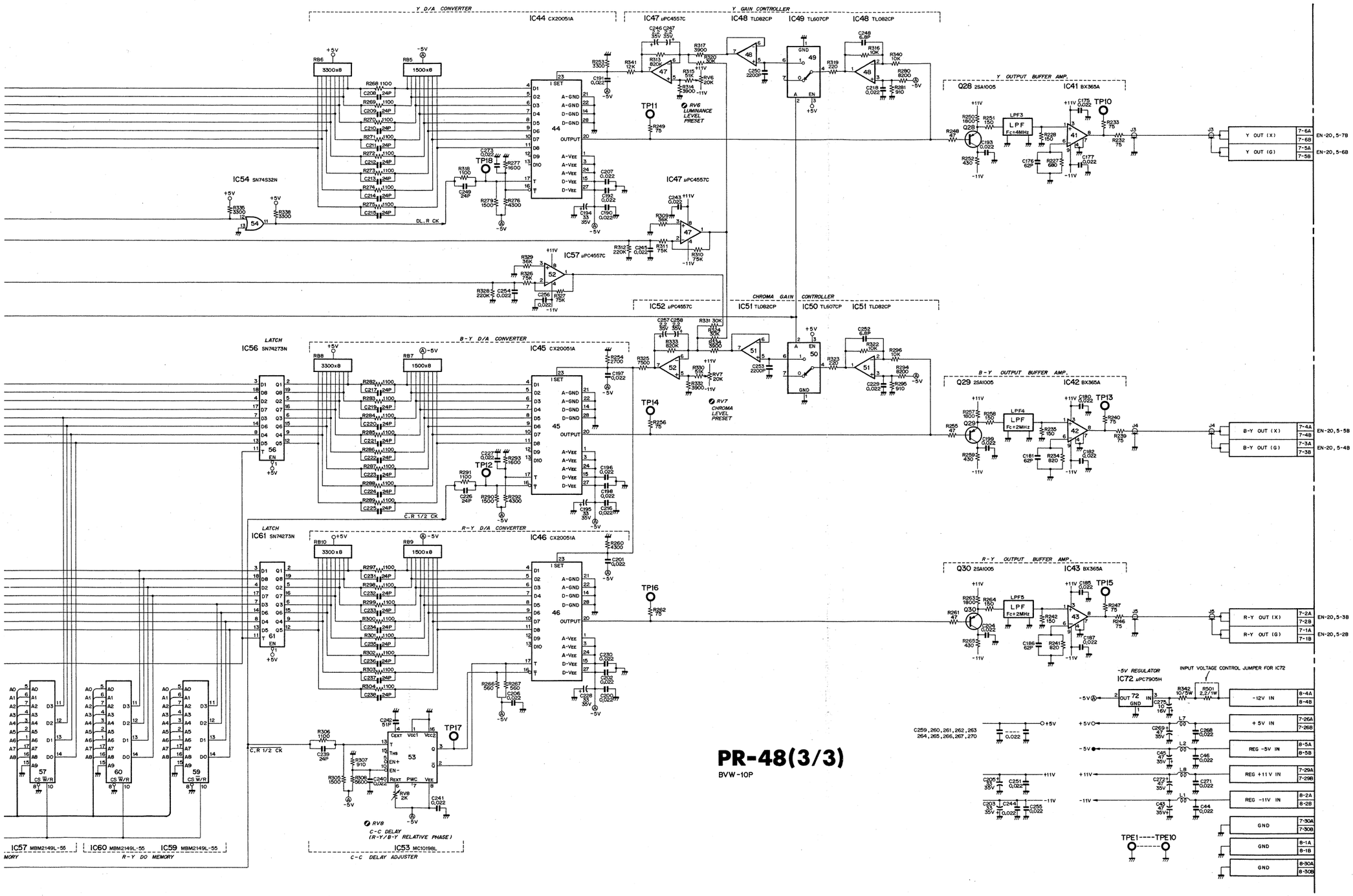
Y D/A CONVERTER
IC44 CX20051A
Y GAIN CONTROLLER
IC47 μPC4557C
IC48 TL082CP
IC49 TL507CP
IC48 TL082CP
Y OUTPUT BUFFER AMP.
Q28 2SA1005
IC41 BX365A
Y OUT (X)
Y OUT (G)
EN-20,5-7B
EN-20,5-6B
IC54 SN74S32N
IC57 μPC4557C
CHROMA GAIN CONTROLLER
IC52 μPC4557C
IC51 TL082CP
IC50 TL507CP
IC51 TL082CP
LATCH
IC56 SN74273N
B-Y D/A CONVERTER
IC45 CX20051A
B-Y OUTPUT BUFFER AMP.
Q29 2SA1005
IC42 BX365A
B-Y OUT (X)
B-Y OUT (G)
EN-20,5-5B
EN-20,5-4B
LATCH
IC61 SN74273N
R-Y D/A CONVERTER
IC46 CX20051A
R-Y OUTPUT BUFFER AMP.
Q30 2SA1005
IC43 BX365A
R-Y OUT (X)
R-Y OUT (G)
EN-20,5-3B
EN-20,5-2B
-5V REGULATOR
IC72 μPC7905H
INPUT VOLTAGE CONTROL JUMPER FOR IC72
-12V IN
+5V IN
REG -5V IN
REG +11V IN
REG -11V IN
GND
TPE1----TPE10
IC57 MBM2149L-55
IC60 MBM2149L-55
IC59 MBM2149L-55
R-Y DO MEMORY
IC53 MC10198L
C-C DELAY ADJUSTER
RV8
C-C DELAY
(R-Y/B-Y RELATIVE PHASE)
RV6
LUMINANCE LEVEL PRESET
RV7
CHROMA LEVEL PRESET
PR-48(3/3)
BVW-10P

EN-20 (VIDEO ENCODER)

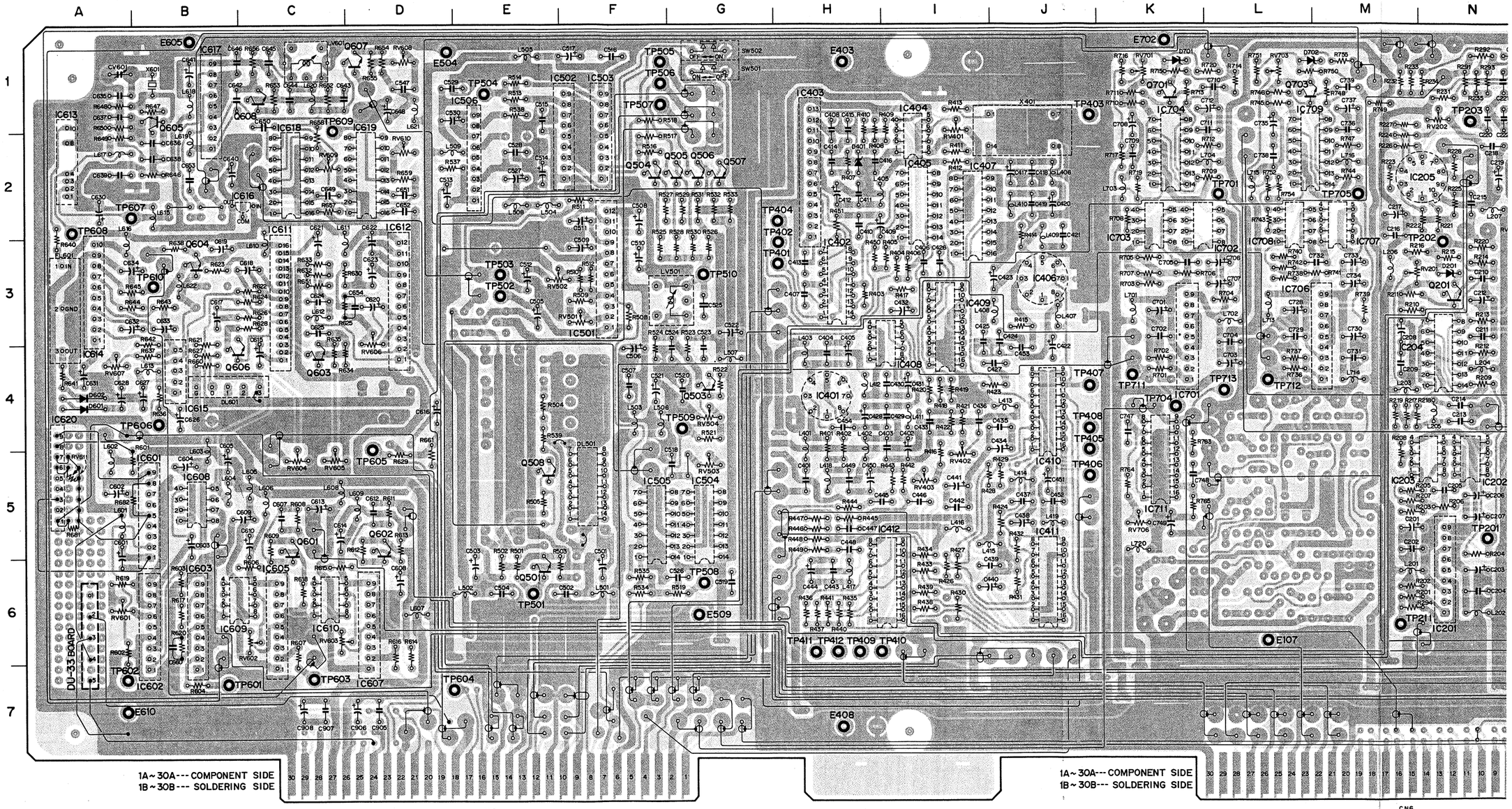

EN-20

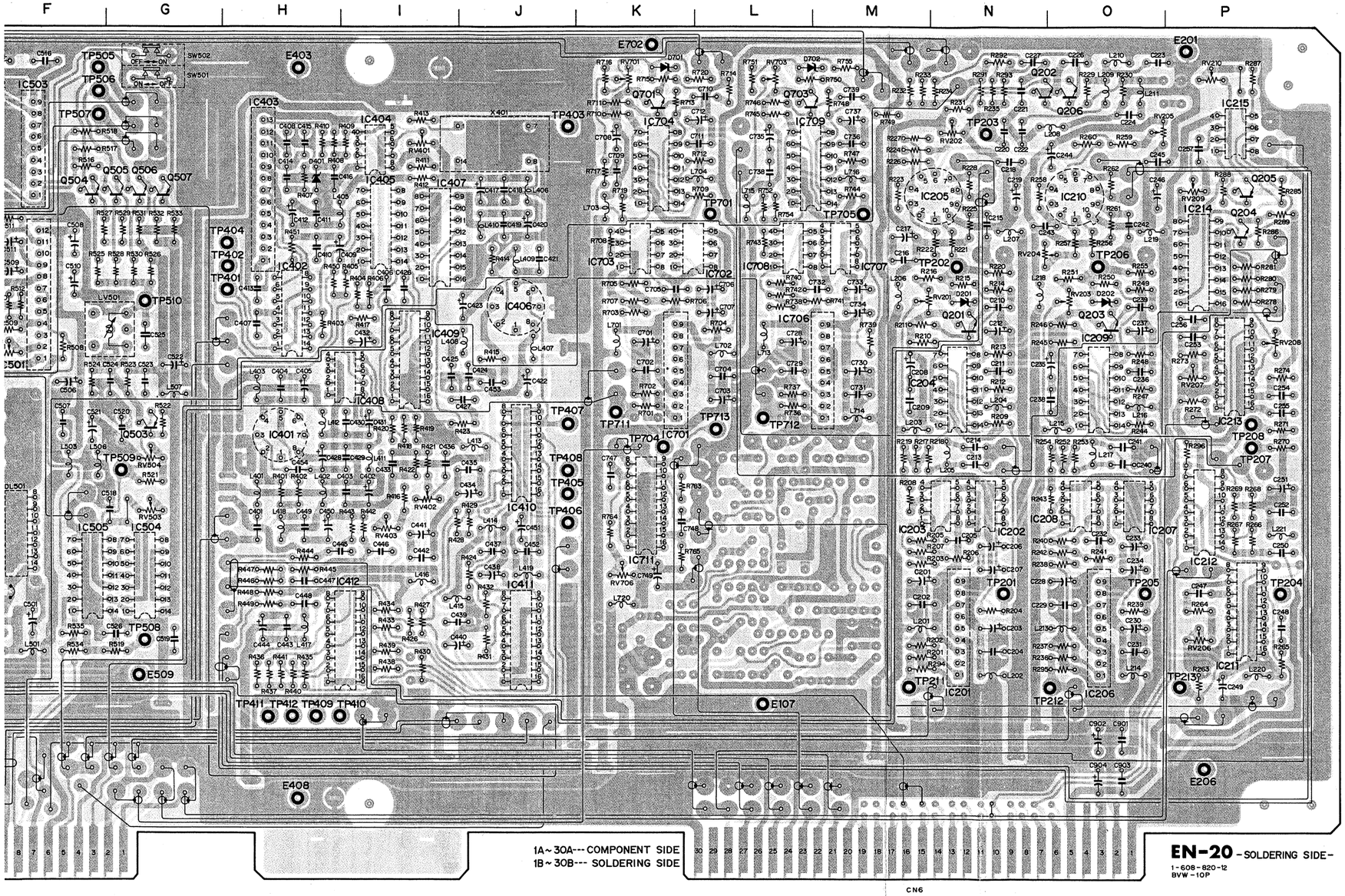

EN-20 -SOLDERING SIDE-

1-608-820-12
BVW-10P

CV601	A-1	IC616	C-2	SW501	G-1
		IC617	B-1	SW502	G-1
D201	N-3	IC618	C-2		
D202	O-3	IC619	D-2	TP201	N-5
D401	H-2	IC620	A-5	TP202	N-3
D601	A-4	IC701	K-3	TP203	N-1
D602	A-4	IC702	K-2	TP204	P-5
D701	K-1	IC703	K-2	TP205	O-5
D702	M-1	IC704	K-2	TP206	O-3
		IC706	M-3	TP207	P-4
DL501	F-5	IC707	M-2	TP208	P-4
DL601	B-4	IC708	L-2	TP211	M-6
		IC709	M-2	TP212	O-6
E107	L-6	IC711	K-5	TP213	P-6
E201	P-1			TP401	H-3
E206	P-7	LV501	G-3	TP402	H-3
E403	H-1	LV601	C-1	TP403	J-1
E408	H-7			TP404	H-2
E504	D-1	Q201	N-3	TP405	J-5
E509	G-6	Q202	N-1	TP406	J-5
E605	B-1	Q203	O-3	TP407	J-4
E610	A-7	Q204	P-2	TP408	J-4
E702	K-1	Q205	P-2	TP409	H-6
		Q206	O-1	TP410	H-6
FL601	A-3	Q501	E-6	TP411	H-6
		Q503	G-4	TP412	H-6
IC201	N-6	Q504	F-2	TP501	E-6
IC202	N-5	Q505	G-2	TP502	E-3
IC203	N-5	Q506	G-2	TP503	E-3
IC204	N-4	Q507	G-2	TP504	E-1
IC205	N-2	Q508	E-5	TP505	F-1
IC206	O-6	Q601	C-5	TP506	F-1
IC207	O-5	Q602	D-5	TP507	F-1
IC208	O-5	Q603	C-4	TP508	G-6
IC209	O-4	Q604	B-3	TP509	G-4
IC210	O-2	Q605	B-1	TP510	G-3
IC211	P-5	Q606	B-4	TP601	B-7
IC212	P-5	Q607	D-1	TP602	A-7
IC213	P-3	Q608	C-1	TP603	C-7
IC214	P-3	Q701	K-1	TP604	D-7
IC215	P-1	Q703	L-1	TP605	D-5
IC401	H-4			TP606	B-4
IC402	H-3	RV201	M-3	TP607	A-2
IC403	H-2	RV202	N-1	TP608	A-2
IC404	I-2	RV203	O-3	TP609	C-2
IC405	I-2	RV204	O-2	TP610	B-3
IC406	J-3	RV205	O-1	TP701	L-2
IC407	I-2	RV206	P-6	TP704	K-4
IC408	I-3	RV207	P-4	TP705	M-2
IC409	I-3	RV208	P-3	TP711	K-4
IC410	J-4	RV209	P-2	TP712	L-4
IC411	J-6	RV210	P-1	TP713	L-4
IC412	I-6	RV401	I-2		
IC501	F-3	RV402	I-5	X401	J-2
IC502	F-2	RV403	I-5	X601	B-1
IC503	F-2	RV501	F-3		
IC504	G-5	RV502	E-3		
IC505	F-5	RV503	G-5		
IC506	E-2	RV504	G-4		
IC601	B-5	RV601	A-6		
IC602	B-6	RV602	C-6		
IC603	B-6	RV603	C-6		
IC605	C-6	RV604	C-5		
IC607	D-6	RV605	C-5		
IC608	B-5	RV606	D-3		
IC609	B-6	RV607	A-4		
IC610	C-6	RV608	D-1		
IC611	C-3	RV609	C-2		
IC612	D-3	RV610	D-2		
IC613	A-2	RV611	A-5		
IC614	A-3	RV701	K-1		
IC615	B-4	RV703	L-1		
		RV706	K-5		

N-20 (1/3) (VIDEO ENCODER)

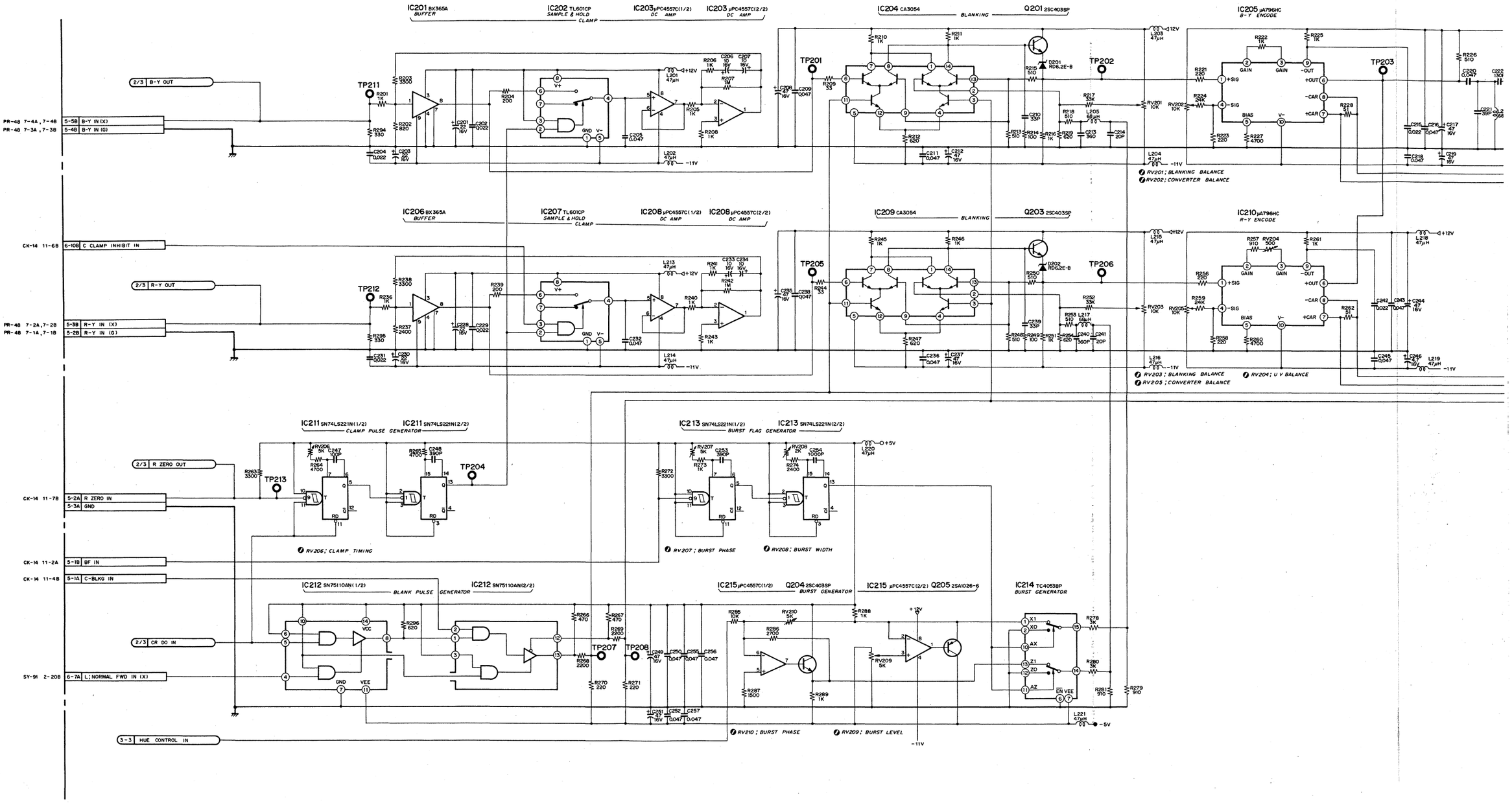

EN-20 (1/3)

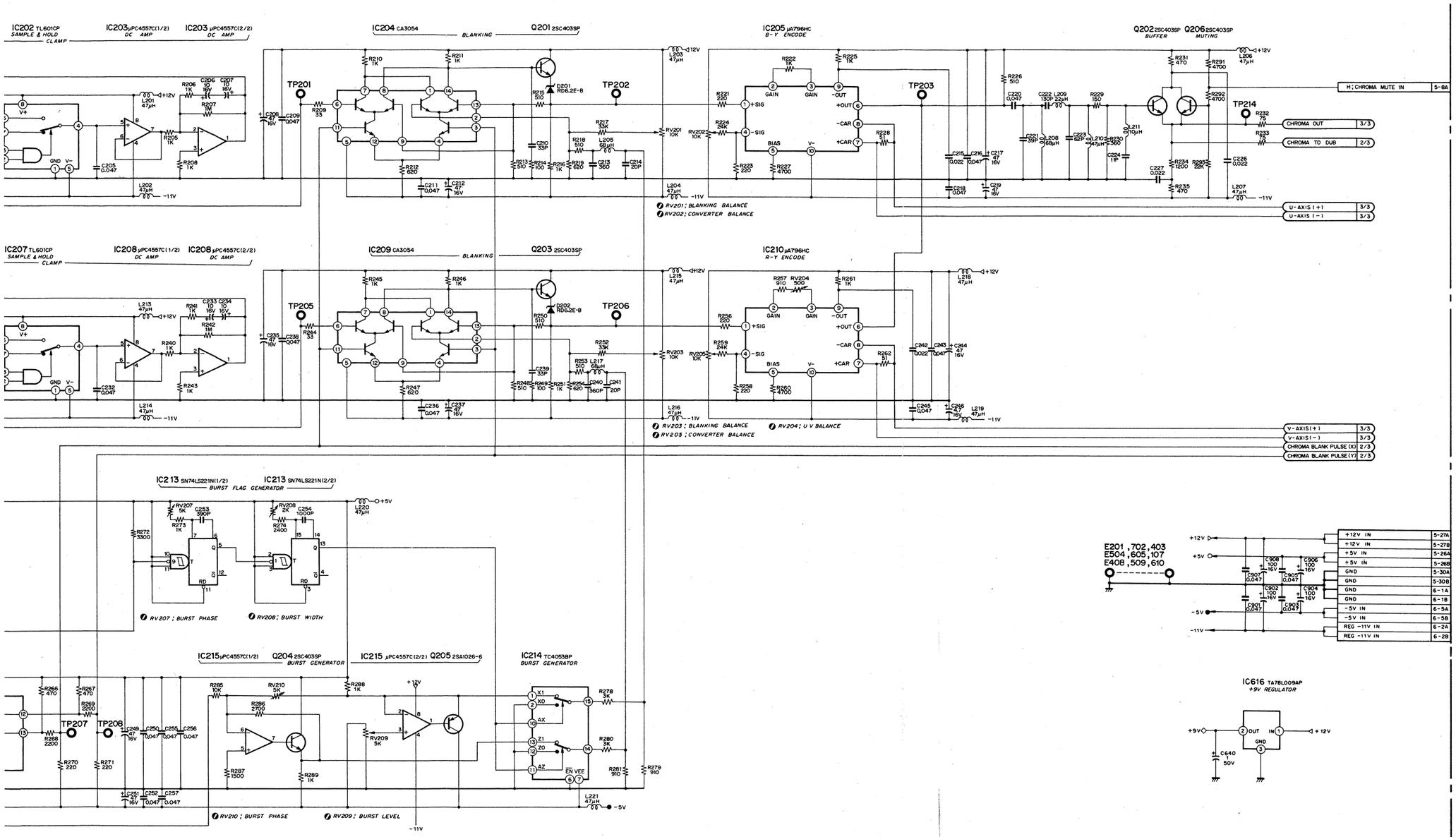

EN-20 (1/3)

1-608-820-12
BVW-10P

EN-20 (1/3)

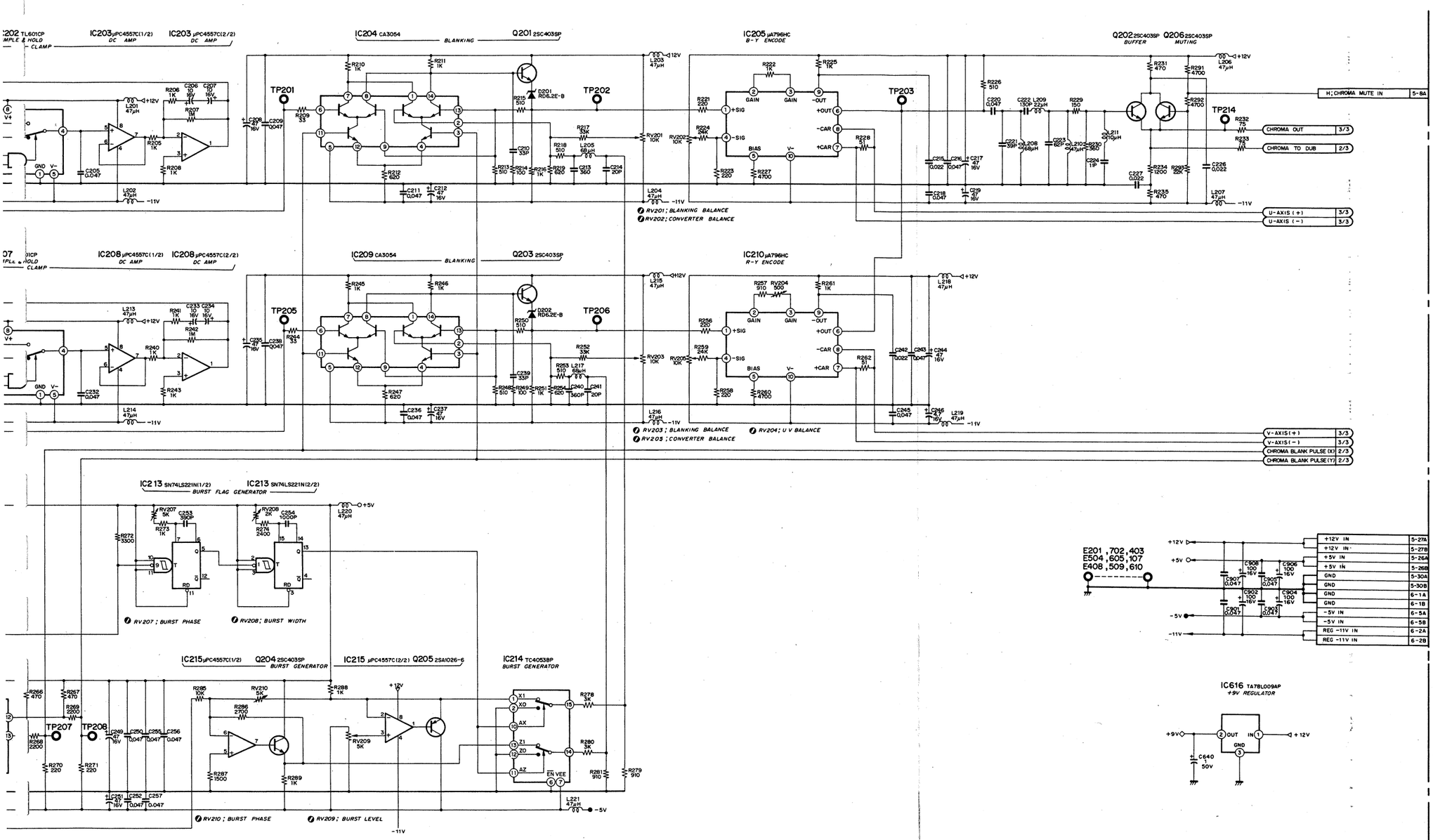

EN-20(1/3)

1-608-820-12
BVW-10P

EN-20 (VIDEO ENCODER)

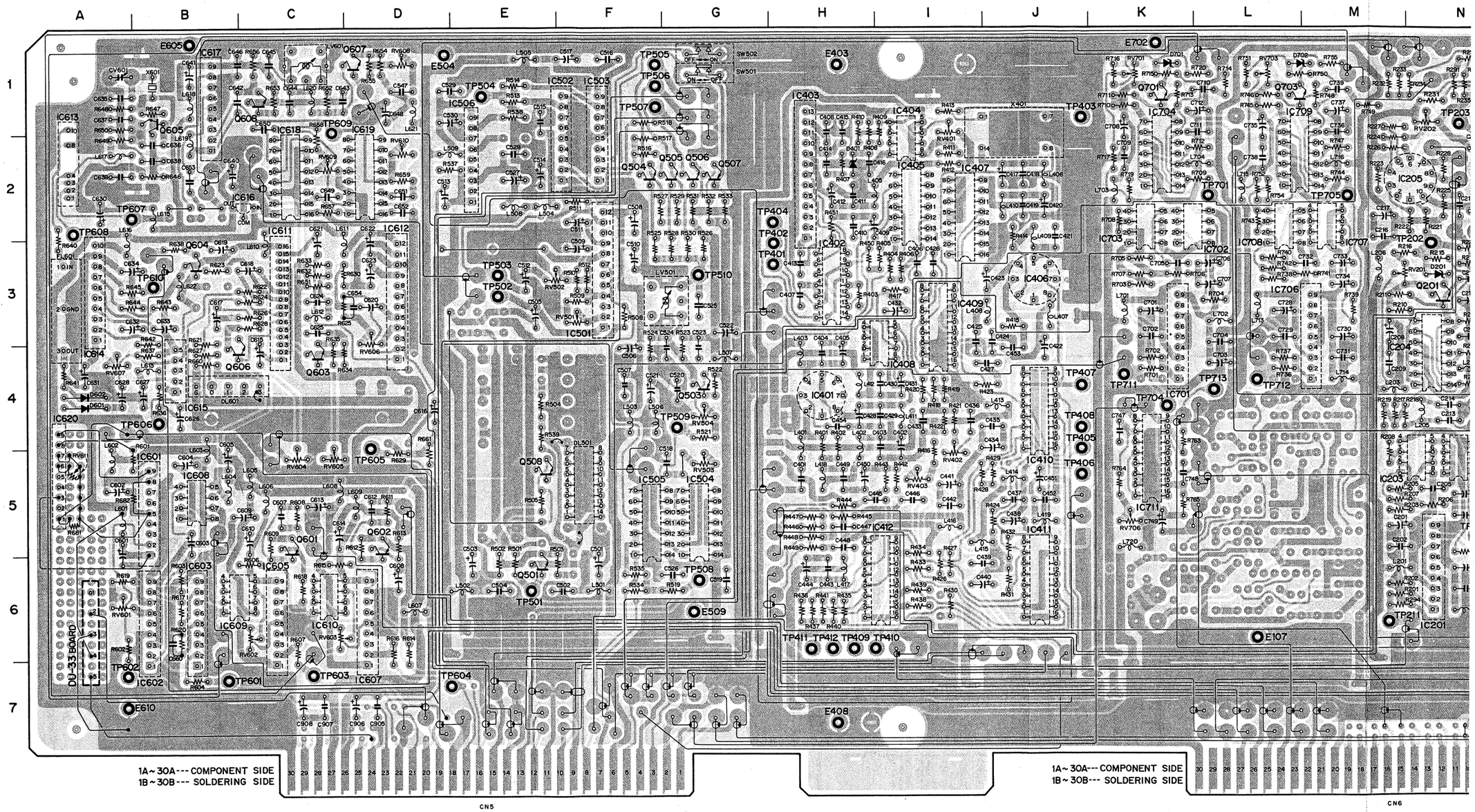

3) (VIDEO ENCODER)

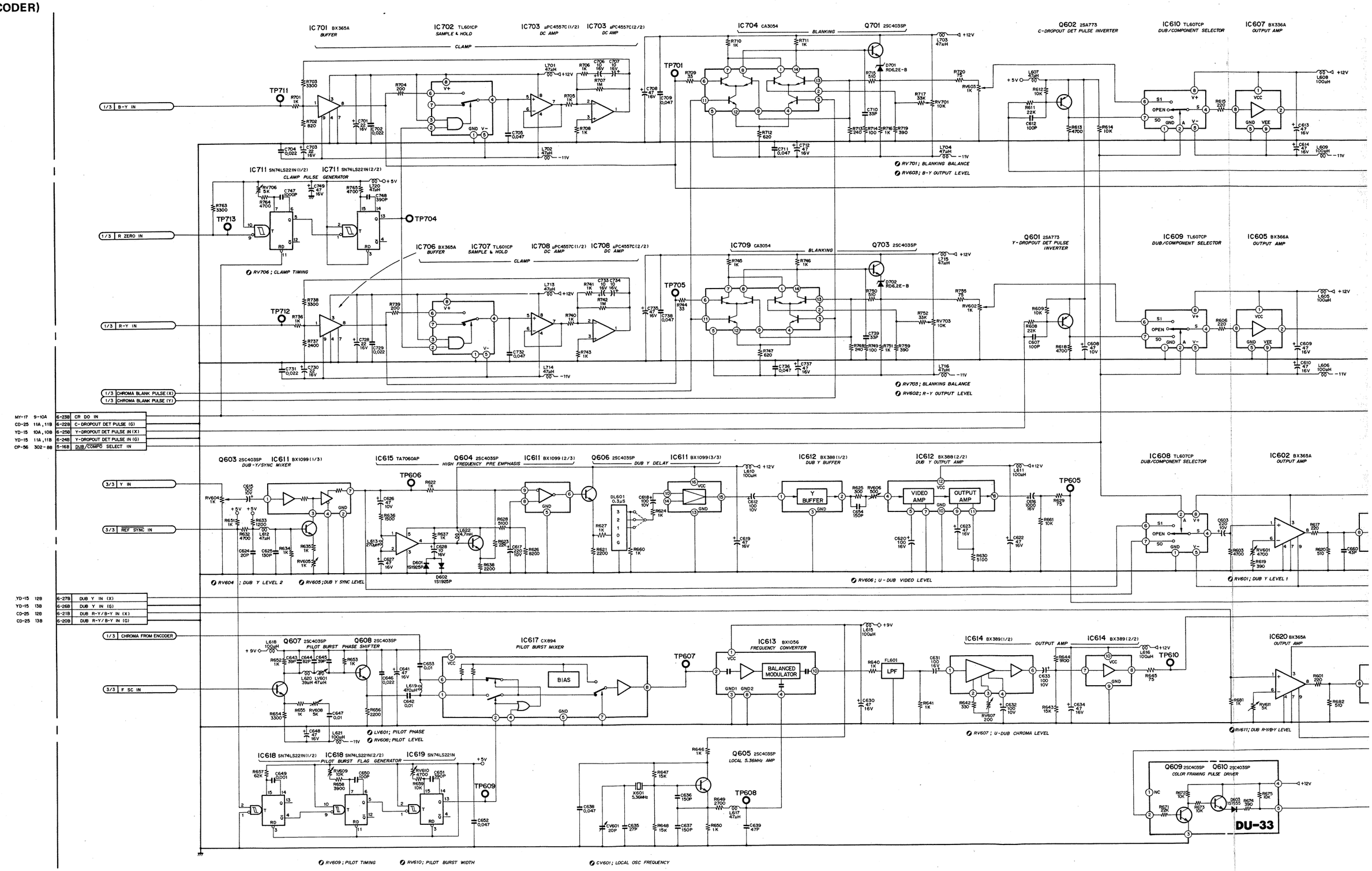

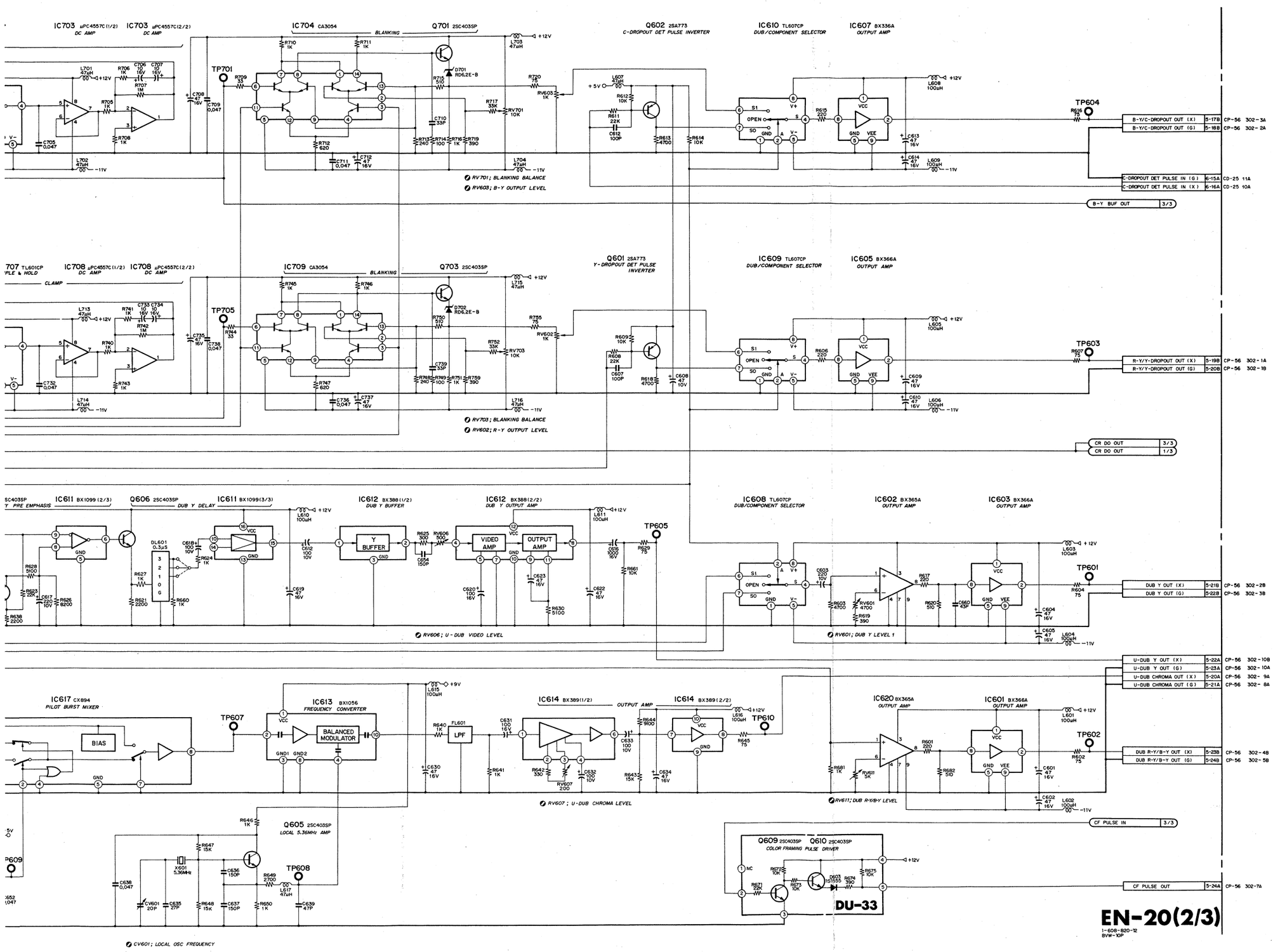
IC703 μPC4557C(1/2) DC AMP
IC703 μPC4557C(2/2) DC AMP
IC704 CA3054
BLANKING
Q701 2SC4035P
Q602 2SA773 C-DROPOUT DET PULSE INVERTER
IC610 TL607CP DUB/COMPONENT SELECTOR
IC607 BX336A OUTPUT AMP
TP701
TP604
RV701; BLANKING BALANCE
RV603; B-Y OUTPUT LEVEL
B-Y/C-DROPOUT OUT (X)
B-Y/C-DROPOUT OUT (G)
C-DROPOUT DET PULSE IN (G)
C-DROPOUT DET PULSE IN (X)
B-Y BUF OUT
IC707 TL601CP
IC708 μPC4557C(1/2) DC AMP
IC708 μPC4557C(2/2) DC AMP
IC709 CA3054
Q703 2SC4035P
Q601 2SA773 Y-DROPOUT DET PULSE INVERTER
IC609 TL607CP DUB/COMPONENT SELECTOR
IC605 BX366A OUTPUT AMP
TP705
TP603
RV703; BLANKING BALANCE
RV602; R-Y OUTPUT LEVEL
R-Y/Y-DROPOUT OUT (X)
R-Y/Y-DROPOUT OUT (G)
CR DO OUT
IC611 BX1099(2/3) Y PRE EMPHASIS
Q606 2SC4035P DUB Y DELAY
IC611 BX1099(3/3)
IC612 BX388(1/2) DUB Y BUFFER
IC612 BX388(2/2) DUB Y OUTPUT AMP
IC608 TL607CP DUB/COMPONENT SELECTOR
IC602 BX365A OUTPUT AMP
IC603 BX366A OUTPUT AMP
TP605
TP601
RV606; U-DUB VIDEO LEVEL
RV601; DUB Y LEVEL 1
DUB Y OUT (X)
DUB Y OUT (G)
U-DUB Y OUT (X)
U-DUB Y OUT (G)
U-DUB CHROMA OUT (X)
U-DUB CHROMA OUT (G)
IC617 CX894 PILOT BURST MIXER
IC613 BX1056 FREQUENCY CONVERTER
IC614 BX389(1/2)
IC614 BX389(2/2)
IC620 BX365A OUTPUT AMP
IC601 BX366A OUTPUT AMP
TP607
TP610
TP602
RV607; U-DUB CHROMA LEVEL
RV611; DUB R-Y/B-Y LEVEL
DUB R-Y/B-Y OUT (X)
DUB R-Y/B-Y OUT (G)
CF PULSE IN
Q605 2SC4035P LOCAL 5.36MHz AMP
TP608
CV601; LOCAL OSC FREQUENCY
Q609 2SC4035P Q610 2SC4035P COLOR FRAMING PULSE DRIVER
CF PULSE OUT
DU-33
EN-20(2/3)
1-608-820-12
BVW-10P

EN-20, DU-45, DU-48 EN-20, DU

EN-20 (VIDEO ENCODER)
DU-45
DU-48

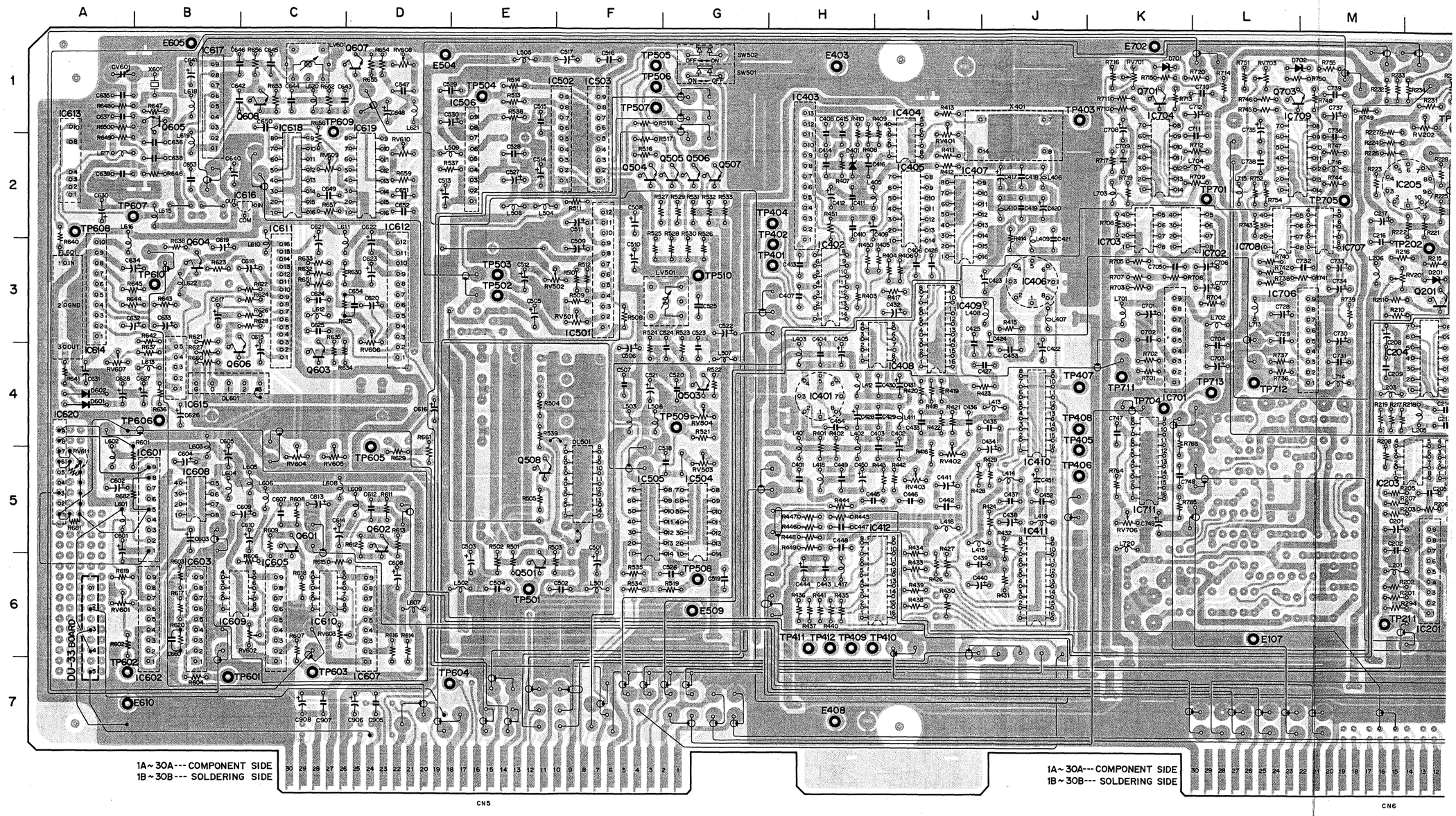

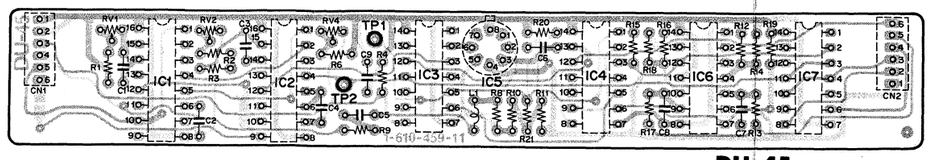

DU-45 -SOLDERING SIDE-
1-610-459-11
BVW-10P

EN-20, DU-45, DU-48

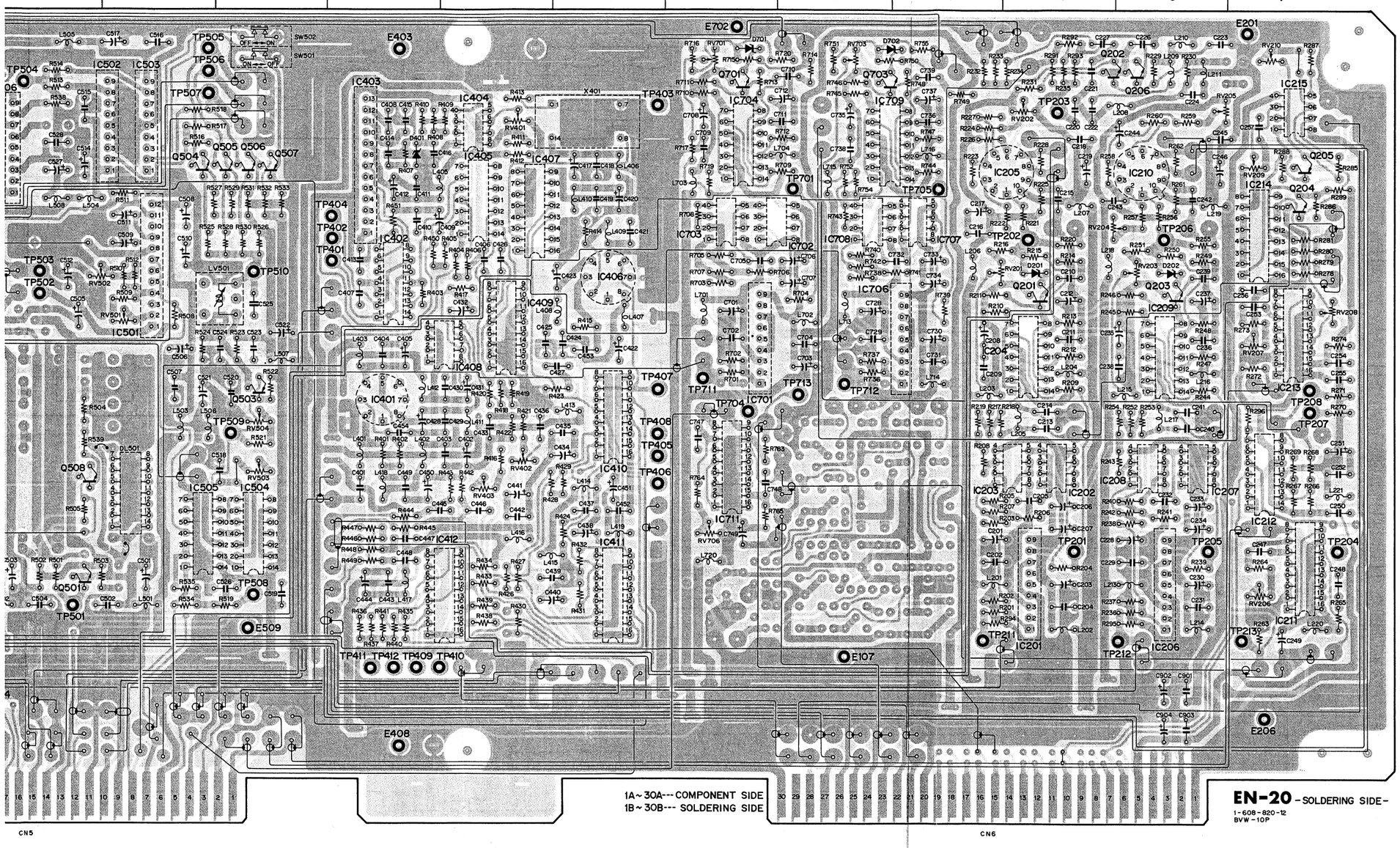

EN-20 -SOLDERING SIDE-
1-608-820-12
BVW-10P

CV601	A-1	IC616	C-2	SW501	G-1
		IC617	B-1	SW502	G-1
D201	N-3	IC618	C-2		
D202	O-3	IC619	D-2	TP201	N-5
D401	H-2	IC620	A-5	TP202	N-3
D601	A-4	IC701	K-3	TP203	N-1
D602	A-4	IC702	K-2	TP204	P-5
D701	K-1	IC703	K-2	TP205	O-5
D702	M-1	IC704	K-2	TP206	O-3
		IC706	M-3	TP207	P-4
DL501	F-5	IC707	M-2	TP208	P-4
DL601	B-4	IC708	L-2	TP211	M-6
		IC709	M-2	TP212	O-6
E107	L-6	IC711	K-5	TP213	P-6
E201	P-1			TP401	H-3
E206	P-7	LV501	G-3	TP402	H-3
E403	H-1	LV601	C-1	TP403	J-1
E408	H-7			TP404	H-2
E504	D-1	Q201	N-3	TP405	J-5
E509	G-6	Q202	N-1	TP406	J-5
E605	B-1	Q203	O-3	TP407	J-4
E610	A-7	Q204	P-2	TP408	J-4
E702	K-1	Q205	P-2	TP409	H-6
		Q206	O-1	TP410	H-6
FL601	A-3	Q501	E-6	TP411	H-6
		Q503	G-4	TP412	H-6
IC201	N-6	Q504	F-2	TP501	E-6
IC202	N-5	Q505	G-2	TP502	E-3
IC203	N-5	Q506	G-2	TP503	E-3
IC204	N-4	Q507	G-2	TP504	E-1
IC205	N-2	Q508	E-5	TP505	F-1
IC206	O-6	Q601	C-5	TP506	F-1
IC207	O-5	Q602	D-5	TP507	F-1
IC208	O-5	Q603	C-4	TP508	G-6
IC209	O-4	Q604	B-3	TP509	G-4
IC210	O-2	Q605	B-1	TP510	G-3
IC211	P-5	Q606	B-4	TP601	B-7
IC212	P-5	Q607	D-1	TP602	A-7
IC213	P-3	Q608	C-1	TP603	C-7
IC214	P-3	Q701	K-1	TP604	D-7
IC215	P-1	Q703	L-1	TP605	D-5
IC401	H-4			TP606	B-4
IC402	H-3	RV201	M-3	TP607	A-2
IC403	H-2	RV202	N-1	TP608	A-2
IC404	I-2	RV203	O-3	TP609	C-2
IC405	I-2	RV204	O-2	TP610	B-3
IC406	J-3	RV205	O-1	TP701	L-2
IC407	I-2	RV206	P-6	TP704	K-4
IC408	I-3	RV207	P-4	TP705	M-2
IC409	I-3	RV208	P-3	TP711	K-4
IC410	J-4	RV209	P-2	TP712	L-4
IC411	J-6	RV210	P-1	TP713	L-4
IC412	I-6	RV401	I-2		
IC501	F-3	RV402	I-5	X401	J-2
IC502	F-2	RV403	I-5	X601	B-1
IC503	F-2	RV501	F-3		
IC504	G-5	RV502	E-3		
IC505	F-5	RV503	G-5		
IC506	E-2	RV504	G-4		
IC601	B-5	RV601	A-6		
IC602	B-6	RV602	C-6		
IC603	B-6	RV603	C-6		
IC605	C-6	RV604	C-5		
IC607	D-6	RV605	C-5		
IC608	B-5	RV606	D-3		
IC609	B-6	RV607	A-4		
IC610	C-6	RV608	D-1		
IC611	C-3	RV609	C-2		
IC612	D-3	RV610	D-2		
IC613	A-2	RV611	A-5		
IC614	A-3	RV701	K-1		
IC615	B-4	RV703	L-1		
		RV706	K-5		

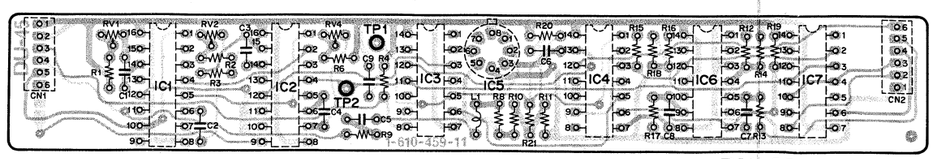

DU-45 -SOLDERING SIDE-
1-610-459-11
BVW-10P

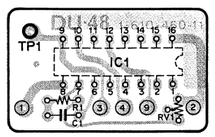

DU-48 -SOLDERING SIDE-
1-610-460-11
BVW-10P

(3) (VIDEO ENCODER)

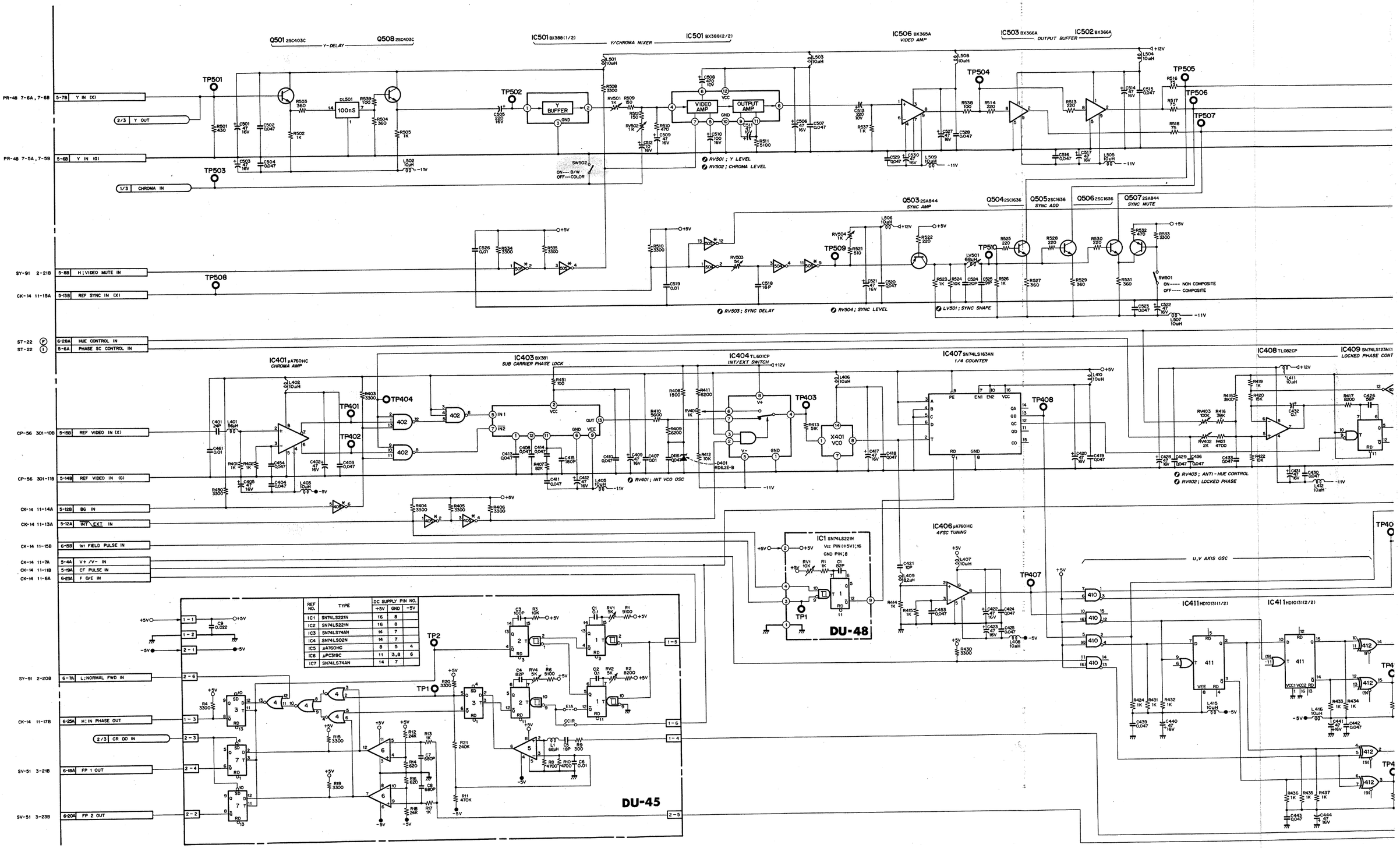

EN-20 (3/3)

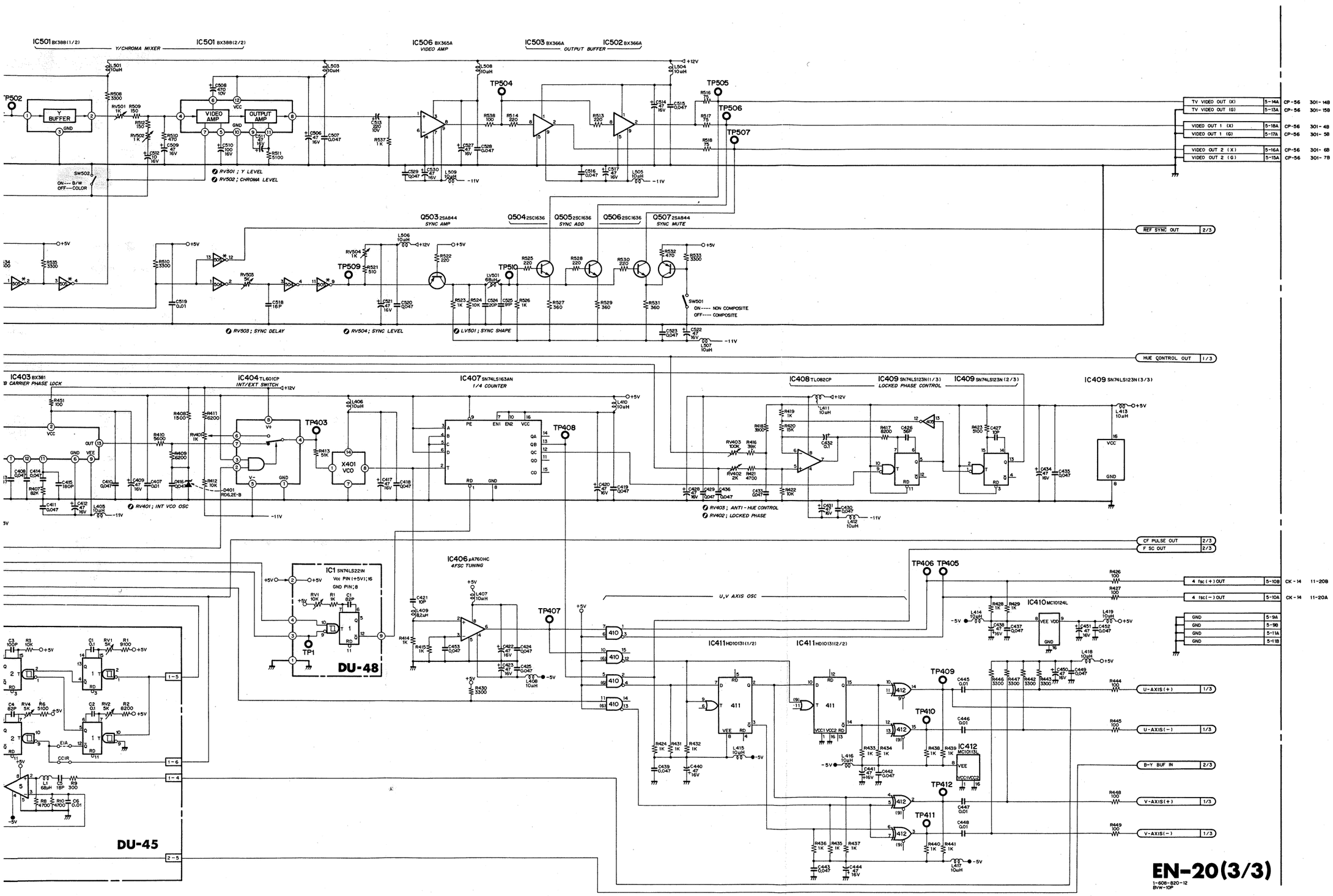
IC501 BX388(1/2)
IC501 BX388(2/2)
Y/CHROMA MIXER
IC506 BX365A
VIDEO AMP
IC503 BX366A
IC502 BX366A
OUTPUT BUFFER
TP502
TP504
TP505
TP506
TP507
TV VIDEO OUT (X)
TV VIDEO OUT (G)
VIDEO OUT 1 (X)
VIDEO OUT 1 (G)
VIDEO OUT 2 (X)
VIDEO OUT 2 (G)
RV501 ; Y LEVEL
RV502 ; CHROMA LEVEL
SW502
ON--- B/W
OFF---COLOR
Q503 2SA844
SYNC AMP
Q504 2SC1636
Q505 2SC1636
SYNC ADD
Q506 2SC1636
Q507 2SA844
SYNC MUTE
REF SYNC OUT
TP509
TP510
RV503 ; SYNC DELAY
RV504 ; SYNC LEVEL
LV501 ; SYNC SHAPE
SW501
ON---- NON COMPOSITE
OFF---- COMPOSITE
HUE CONTROL OUT
IC403 BX381
CARRIER PHASE LOCK
IC404 TL601CP
INT/EXT SWITCH
IC407 SN74LS163AN
1/4 COUNTER
IC408 TL082CP
IC409 SN74LS123N(1/3)
LOCKED PHASE CONTROL
IC409 SN74LS123N(2/3)
IC409 SN74LS123N(3/3)
TP403
TP408
X401
VCO
RV401 ; INT VCO OSC
RV403 ; ANTI-HUE CONTROL
RV402 ; LOCKED PHASE
CF PULSE OUT
F SC OUT
IC1 SN74LS221N
Vcc PIN(+5V);16
GND PIN;8
DU-48
IC406 μA760HC
4FSC TUNING
TP407
U,V AXIS OSC
TP406
TP405
IC410 MC10124L
4 fsc(+) OUT
4 fsc(−) OUT
GND
IC411 HD10131(1/2)
IC411 HD10131(2/2)
TP409
TP410
TP411
TP412
IC412 MC10113L
U-AXIS(+)
U-AXIS(−)
B-Y BUF IN
V-AXIS(+)
V-AXIS(−)
DU-45
EN-20(3/3)
1-608-820-12
BVW-10P

AU-37 (AUDIO PB SYSTEM)

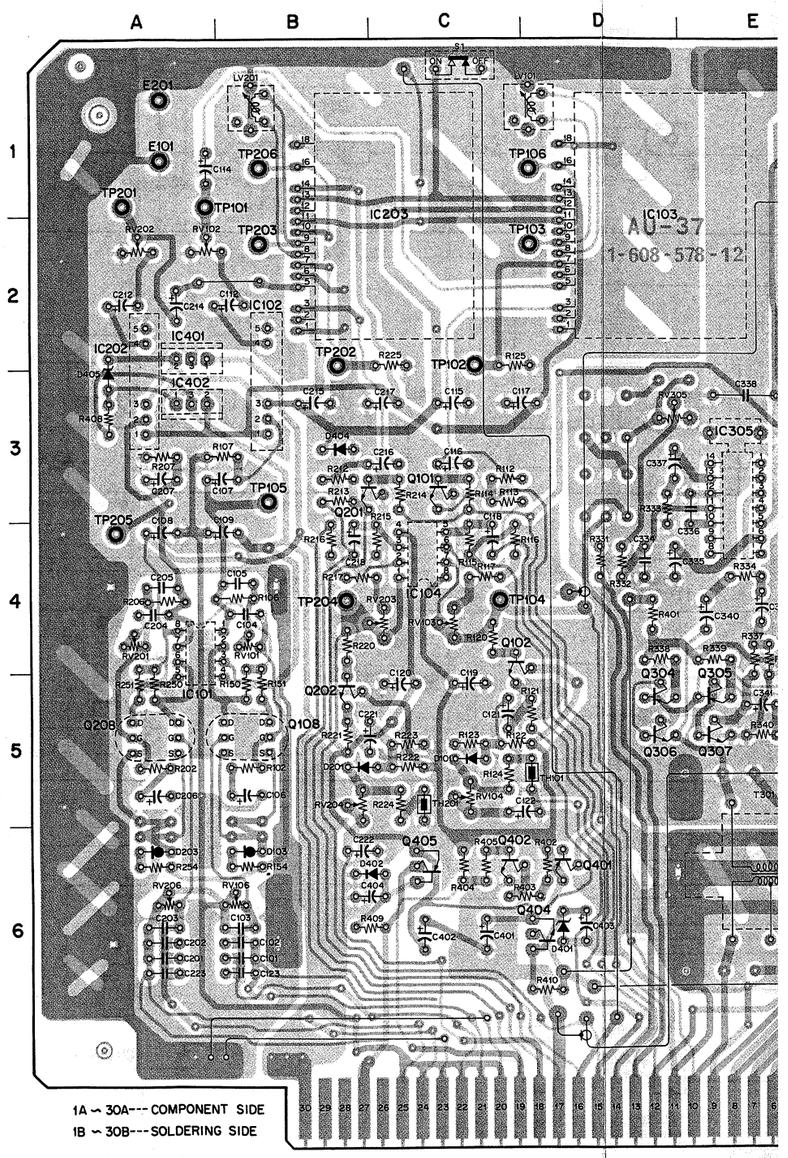

AU-37 (AUDIO PB SYSTEM)

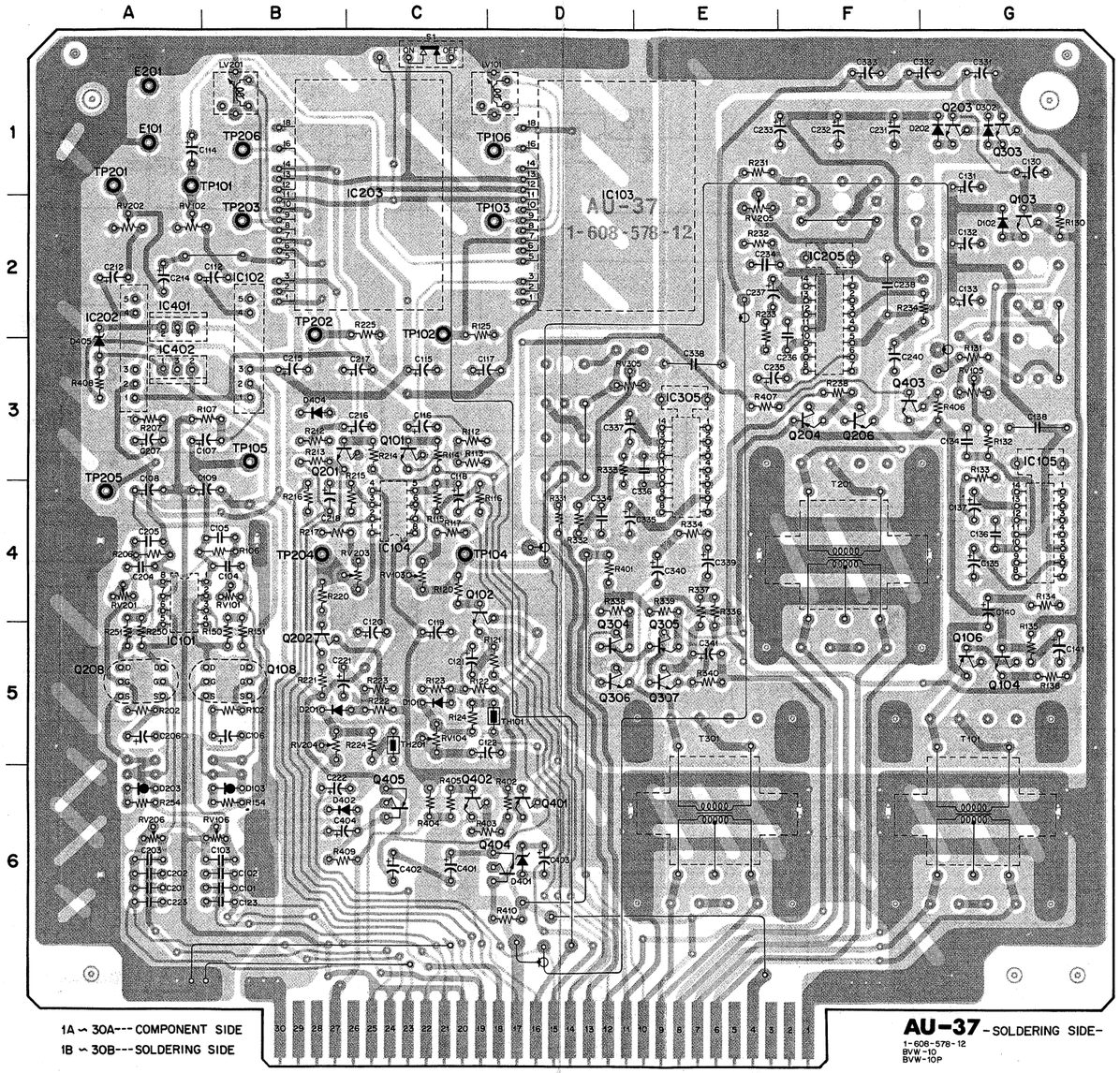

D101	C - 5	RV101	B - 4
D102	G - 2	RV102	A - 2
D103	B - 6	RV103	C - 4
D201	B - 5	RV104	C - 5
D202	G - 1	RV105	G - 3
D203	A - 6	RV106	B - 6
D302	G - 1	RV201	A - 4
D401	D - 6	RV202	A - 2
D402	C - 6	RV203	C - 4
D404	B - 3	RV204	B - 5
D405	A - 3	RV205	E - 2
		RV206	A - 6
E101	A - 1	RV305	D - 3
E201	A - 1		
		S1	C - 1
IC101	A - 4		
IC102	B - 3	T101	G - 6
IC103	D - 2	T201	F - 4
IC104	C - 4	T301	E - 6
IC105	G - 4		
IC202	A - 3	TP101	A - 1
IC203	C - 2	TP102	C - 3
IC205	F - 2	TP103	D - 2
IC305	E - 3	TP104	C - 4
IC401	A - 2	TP105	B - 3
IC402	A - 3	TP106	D - 1
		TP201	A - 1
LV101	D - 1	TP202	B - 3
LV201	B - 1	TP203	B - 2
		TP204	B - 4
Q101	C - 3	TP205	A - 4
Q102	D - 4	TP206	B - 1
Q103	G - 2		
Q104	G - 5		
Q106	G - 5		
Q108	B - 5		
Q201	C - 3		
Q202	B - 5		
Q203	G - 1		
Q204	F - 3		
Q206	F - 3		
Q208	A - 5		
Q303	G - 1		
Q304	D - 5		
Q305	E - 5		
Q306	D - 5		
Q307	E - 5		
Q401	D - 6		
Q402	C - 6		
Q403	F - 3		
Q404	D - 6		
Q405	C - 6		

AU-37 (AUDIO PB SYSTEM)

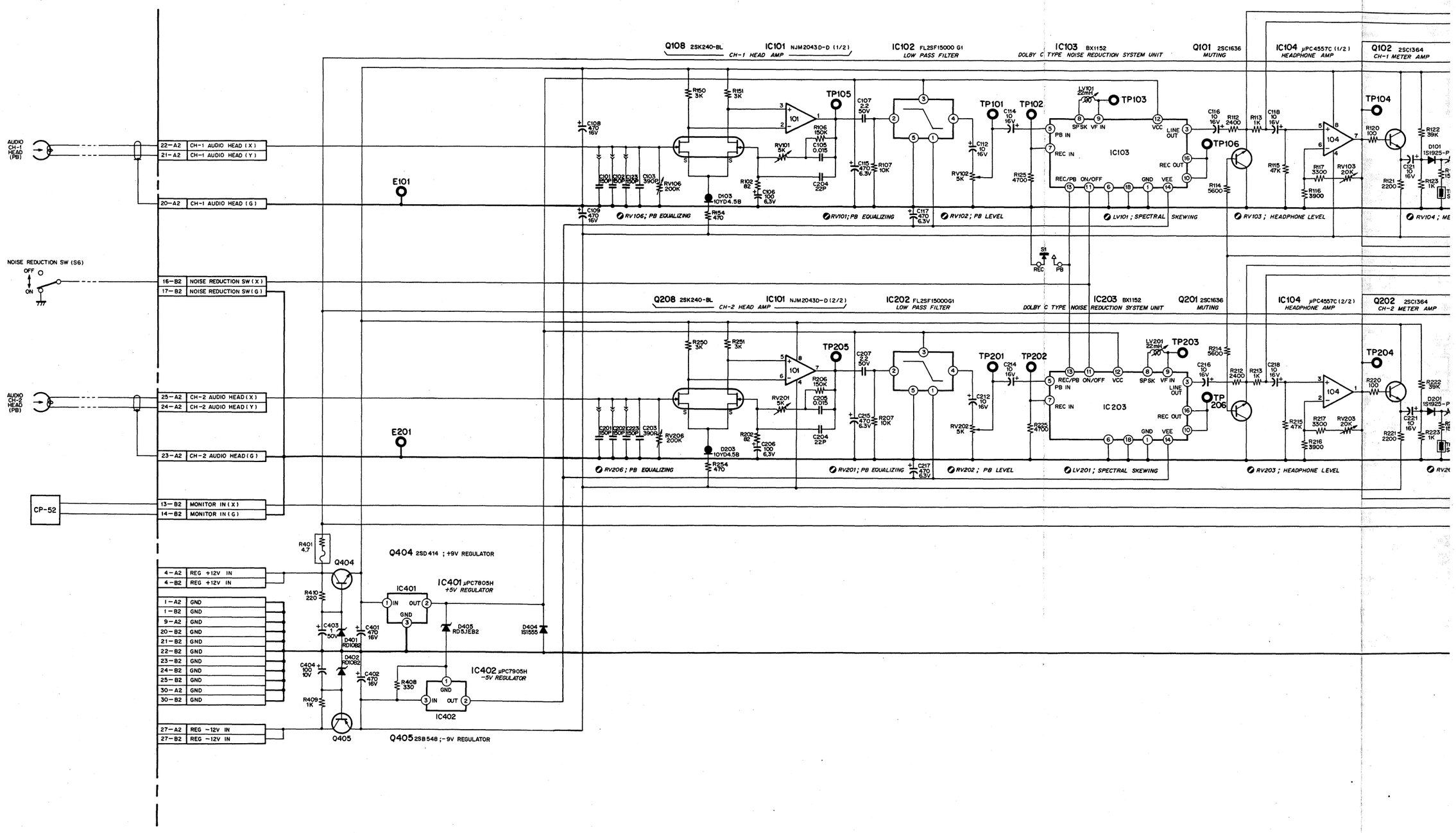

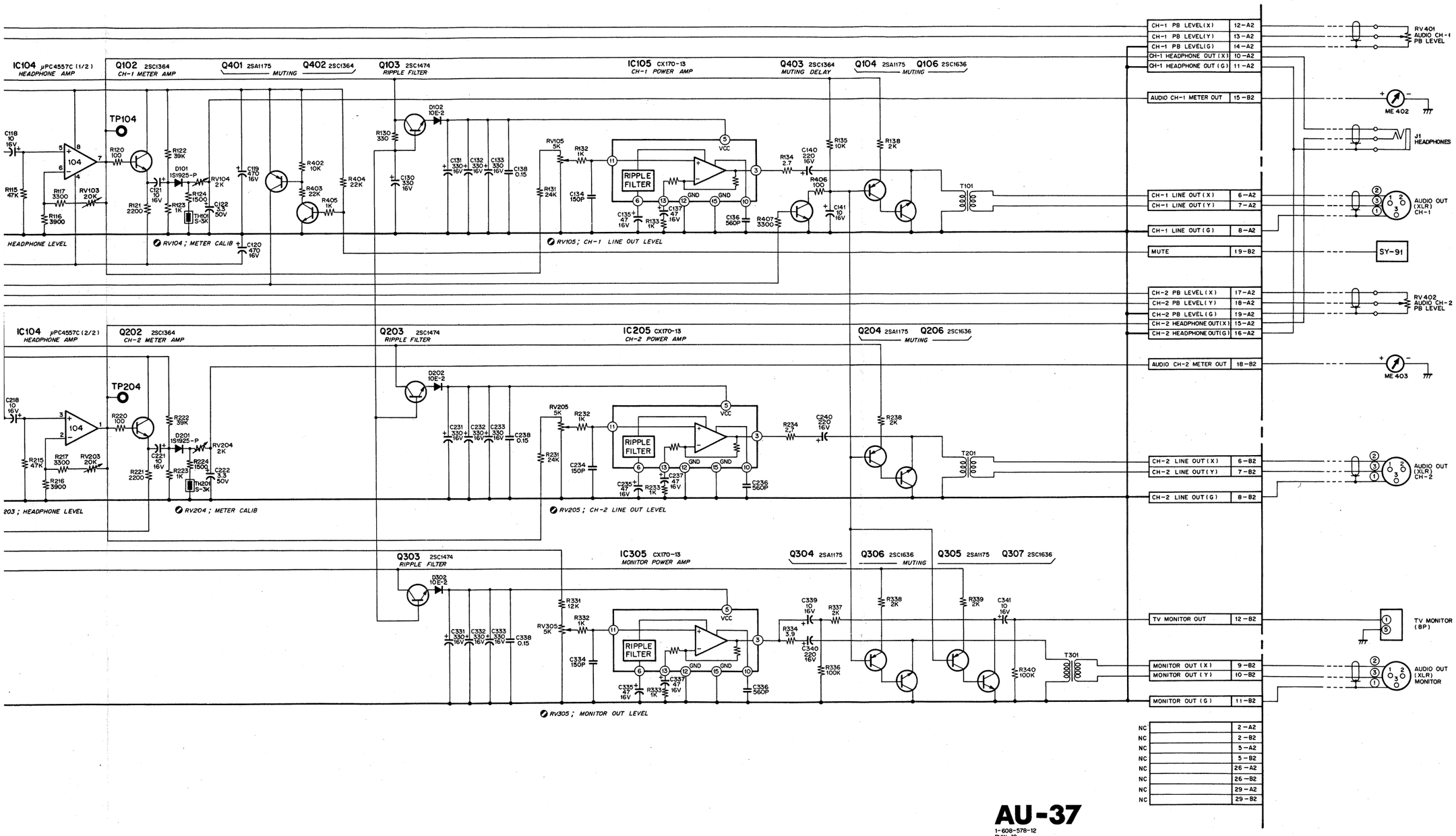

AU-37

1-608-578-12
BVW-10
BVW-10P

SV-51 (1/5)

SV-51 (1/5) (SERVO SYSTEM)

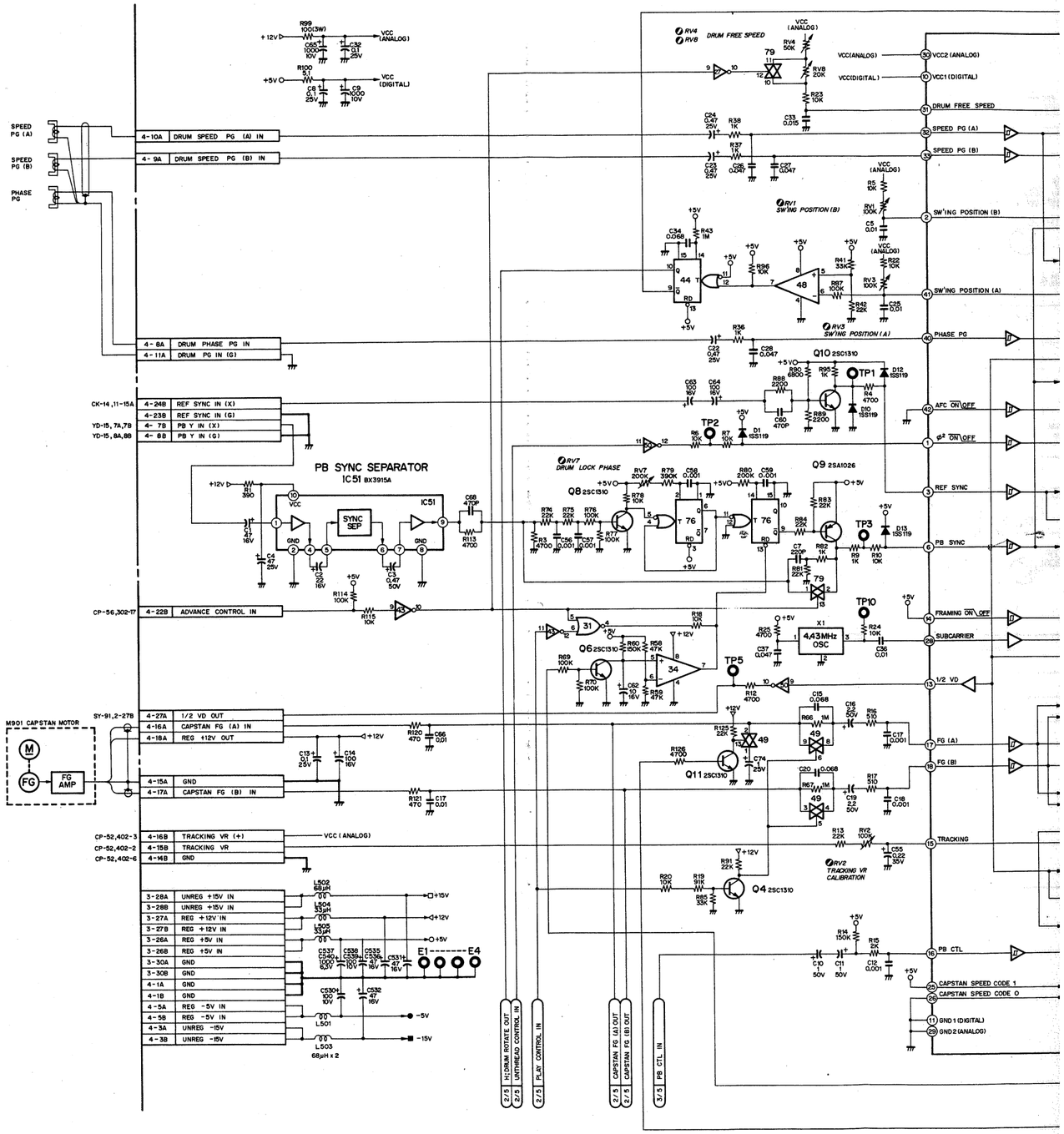

SV-51 (1/5)

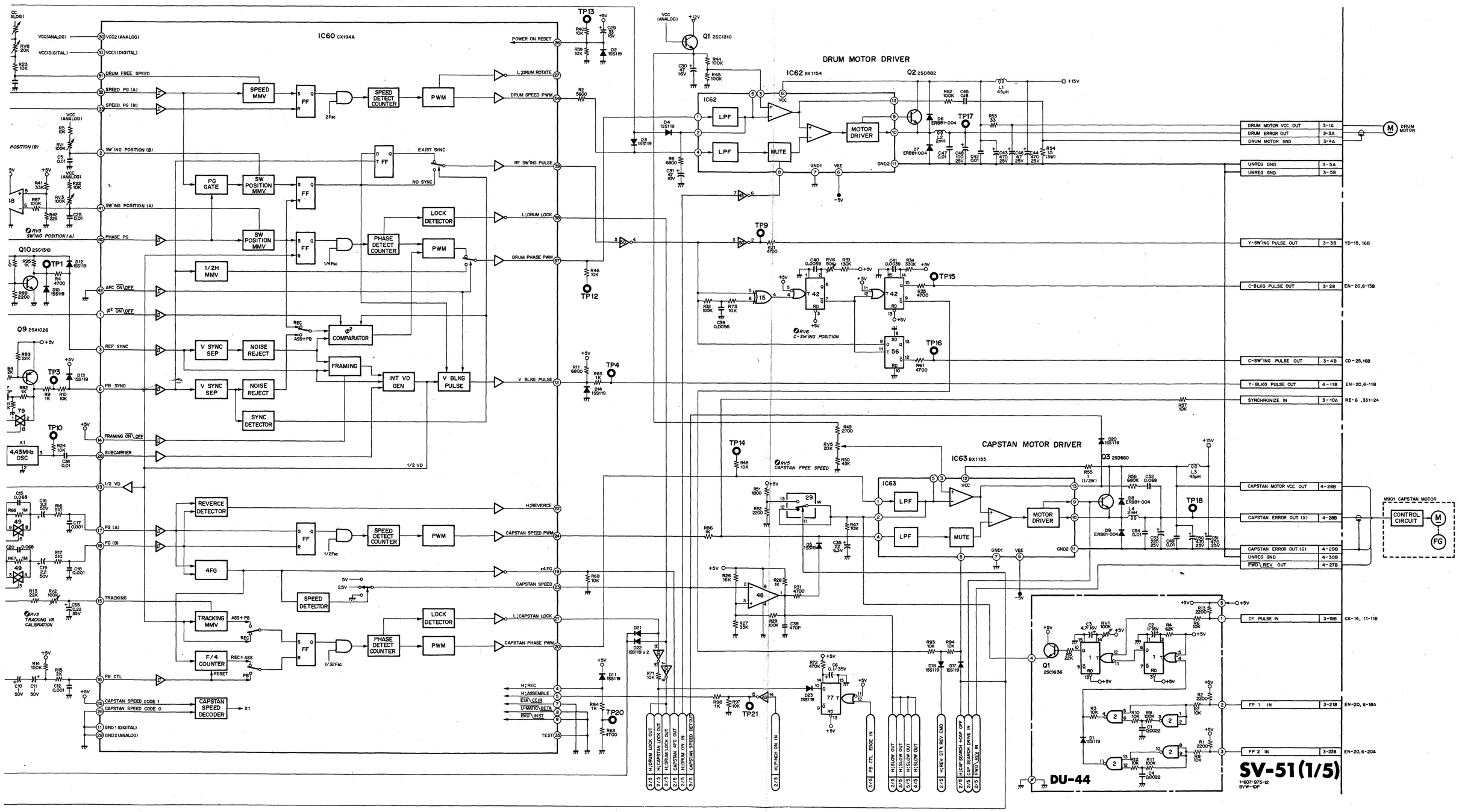
IC60 CX194A
DRUM MOTOR DRIVER
IC62 BX1154
Q2 2SD882
CAPSTAN MOTOR DRIVER
IC63 BX1155
Q3 2SD880
Q1 2SC1310
Q10 2SC1310
Q9 2SA1026
Q1 2SC1636
DU-44
SPEED MMV
SPEED DETECT COUNTER
PWM
PG GATE
SW POSITION MMV
PHASE DETECT COUNTER
LOCK DETECTOR
1/2H MMV
V SYNC SEP
NOISE REJECT
SYNC DETECTOR
COMPARATOR
FRAMING
INT VD GEN
V BLKG PULSE
REVERCE DETECTOR
4FG
TRACKING MMV
F/4 COUNTER
CAPSTAN SPEED DECODER
LPF
MUTE
MOTOR DRIVER
CONTROL CIRCUIT
M9O1 CAPSTAN MOTOR
DRUM MOTOR VCC OUT 3-1A
DRUM ERROR OUT 3-3A
DRUM MOTOR GND 3-4A
UNREG GND 3-5A
UNREG GND 3-5B
Y-SW'ING PULSE OUT 3-3B YD-15, 16B
C-BLKG PULSE OUT 3-2B EN-20,6-13B
C-SW'ING PULSE OUT 3-4B CD-25,16B
Y-BLKG PULSE OUT 4-11B EN-20,6-11B
SYNCHRONIZE IN 3-10A RE-6 ,331-24
CAPSTAN MOTOR VCC OUT 4-26B
CAPSTAN ERROR OUT (X) 4-28B
CAPSTAN ERROR OUT (G) 4-29B
UNREG GND 4-30B
FWD\REV OUT 4-27B
CF PULSE IN 3-19B CK-14, 11-11B
FP 1 IN 3-21B EN-20, 6-18A
FP 2 IN 3-23B EN-20,6-20A
SV-51(1/5)
1-607-975-12
8VW-10F

ERVO SYSTEM)

Type	Pin No.					
	−15V	−5V	GND	+5V	+12V	+15V
TC4081BP, MB84081B			7	14		
81BP, MB84081B			7	14		
538BP			8	16		
30BP			7	14		
69UBP, MB84069UB			7	14		
75BP			7	14		
MSM4094RS			8	16		
TC4021BP			8	16		
TC4071BP			7	14		
30BP			7	14		
01BP, MB84001B			7	14		
53BP, MB84053B			8	16		
73BP			7	14		
16BP			8	16		
TC4030BP			7	14		
μPC358C, LM358P	4				8	
μPC4558C, NJM4558D	4				8	
32BP	8		8	16		
32BP	8		8	16		
81BP, MB84081B	7		7	14		
73BP	7		7	14		
81BP, MB84081B	7		7	14		
HD14538BP	8		8	16		
TC4071BP	7		7	14		
MSM4094RS	8		8	16		
49BP, MB84049UB	8		8	1		
01BP, MB84001B	7		7	14		
53BP, MB84053B	8		8	16		
49BP, MB84049UB	8		8	1		
TC4001BP, MB84001B	7		7	14		
TC4516BP	8		8	16		
TC4081BP, MB84081B	7		7	14		
NJM2903D	4				8	
903D	4				8	
51BP, MB84051B	8		8	16		
51BP, MB84051B	8		8	16		
53BP, MB84053B	8		8	16		
538BP	8		8	16		
TC4030BP	7		7	14		
TC4013BP, MB84013B	7		7	14		
HD14538BP	8		8	16		
49BP, MB84049UB	8		8	1		
538BP	8		8	16		
49BP, MB84049UB	8		8	1		
538BP	8		8	16		
50BP	8		8	1		
NJM2903D	4		4	8		
TC4066BP	7		7	14		
TC4049BP, MB84049UB	8		8	1		
15A	Refer to Schematic					
67BP			8	16		
58C, LM358P	4					8
58C, LM358P			4	8		
39C			12		3	
TC4013BP, MB84013B			7	14		
μPC4558C, NJM4558D		4				8
μPC4558C, NJM4558D		4		8		
558D-D		4		8		
4B	Refer to Schematic					
558D-FA	4					8
54	Refer to Schematic					
55	Refer to Schematic					
μPC339C	11					4
μPC358C, LM358P	4					8
24C			11		4	
903D			4	8		
558C, NJM4558D			4		8	
558C, NJM4558D			4		8	
TA78L005P, NJM79L05A	Refer to Schematic					
μPC4558C, NJM4558D		4		8		
538BP			8	16		
538BP			8	16		
53BP, MB84053B			8	16		
66BP			7	14		

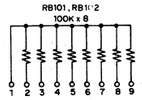

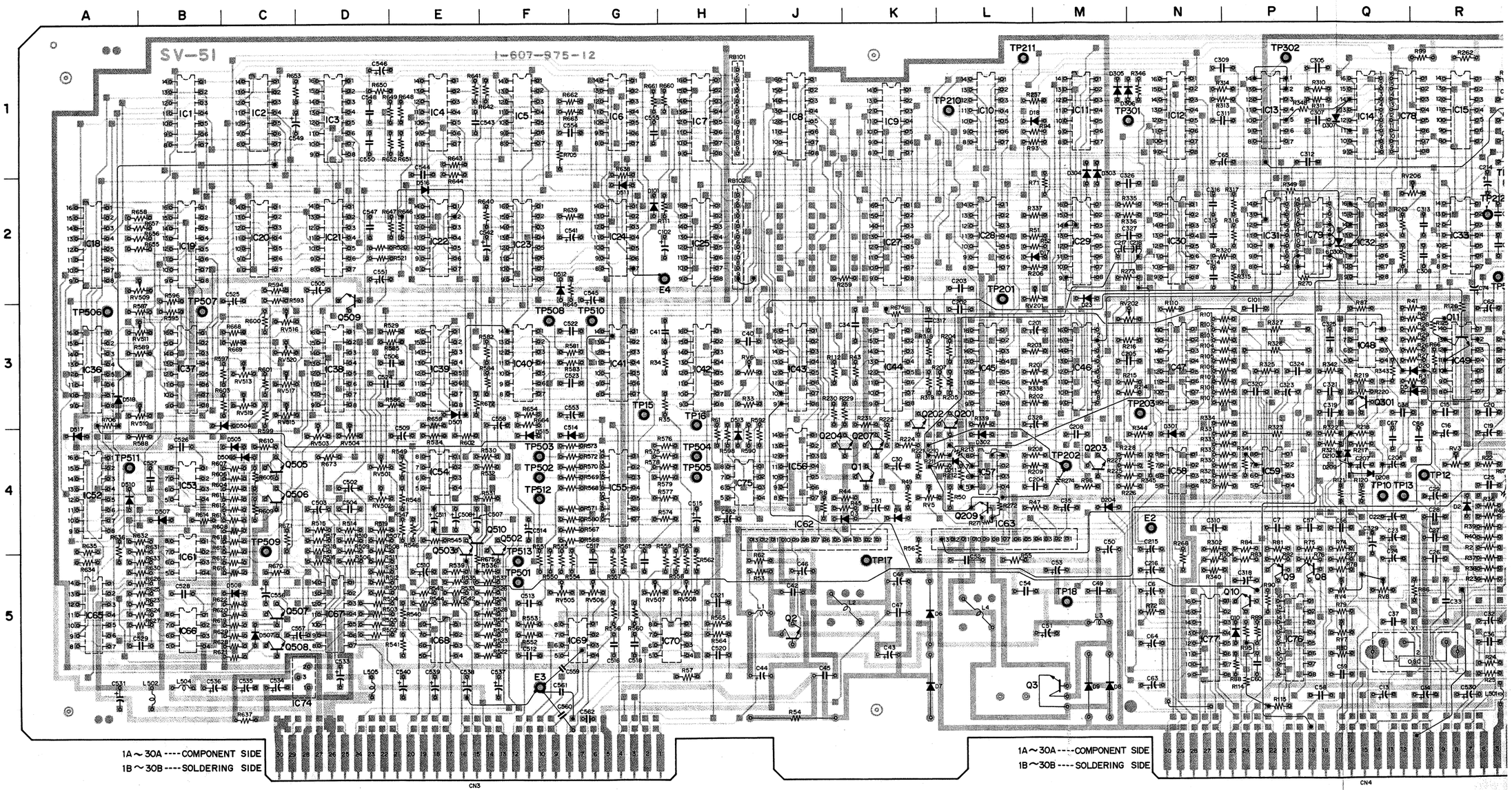

SV-51, DU-44

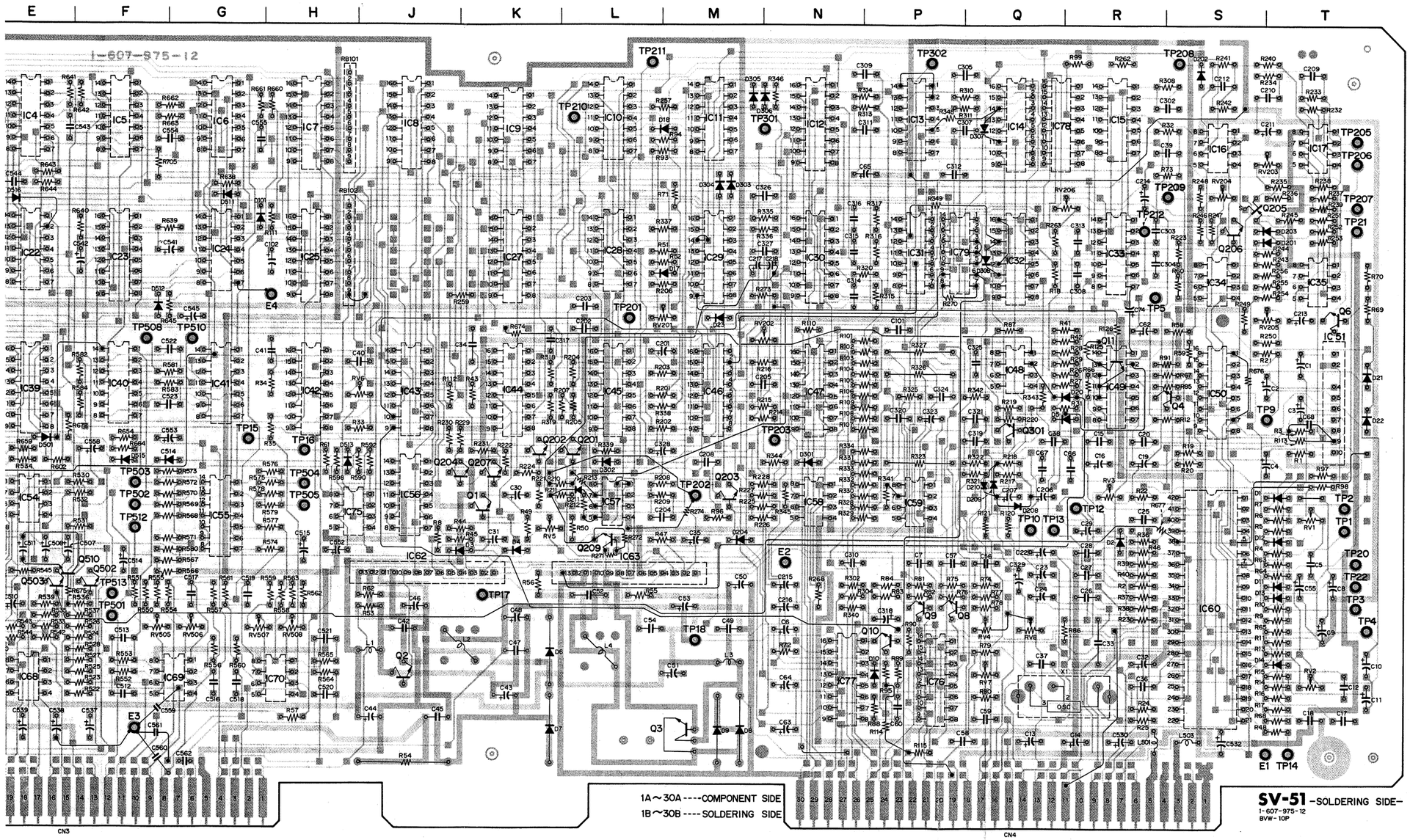

SV-51 –SOLDERING SIDE–
1-607-975-12
BVW-10P

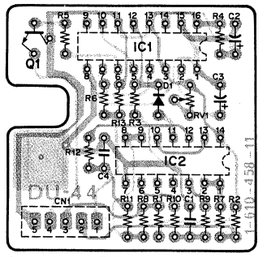

DU-44 –SOLDERING SIDE–
1-610-458-11
BVW-10P

D1	T-4
D2	R-4
D3	J-4
D4	J-4
D5	R-3
D6	K-5
D7	K-5
D8	M-5
D9	M-5
D10	P-5
D11	T-4
D12	T-4
D13	T-5
D14	T-5
D17	M-2
D18	M-1
D20	R-3
D21	T-3
D22	T-3
D23	M-3
D101	G-2
D201	T-2
D202	S-1
D203	T-2
D204	M-4
D208	Q-4
D209	Q-4
D210	Q-4
D211	L-4
D301	N-4
D302	L-4
D303	M-2
D304	M-2
D305	M-1
D306	M-1
D307	Q-1
D308	Q-2
D501	E-3
D504	C-3
D505	C-4
D506	C-4
D507	B-4
D508	C-5
D509	C-5
D510	A-4
D511	G-2
D512	F-2
D513	H-3
D514	G-3
D515	F-3
D516	E-2
D517	A-4
D518	A-3
E1	S-5
E2	N-4
E3	F-5
E4	H-2

IC1	B-1
IC2	C-1
IC3	D-1
IC4	E-1
IC5	F-1
IC6	G-1
IC7	H-1
IC8	J-1
IC9	K-1
IC10	L-1
IC11	M-1
IC12	N-1
IC13	P-1
IC14	Q-1
IC15	R-1
IC16	S-1
IC17	T-1
IC18	A-2
IC19	B-2
IC20	C-2
IC21	D-2
IC22	E-2
IC23	F-2
IC24	G-2
IC25	H-2
IC27	K-2
IC28	L-2
IC29	M-2
IC30	N-2
IC31	P-2
IC32	Q-2
IC33	R-2
IC34	S-2
IC35	T-2
IC36	A-3
IC37	B-3
IC38	D-3
IC39	E-3
IC40	F-3
IC41	G-3
IC42	H-3
IC43	J-3
IC44	K-3
IC45	L-3
IC46	M-3
IC47	N-3
IC48	Q-3
IC49	R-3
IC50	S-3
IC51	T-3
IC52	A-4
IC53	B-4
IC54	E-4
IC55	G-4
IC56	J-4
IC57	L-4
IC58	N-4
IC59	P-4
IC60	S-4

IC61	B-5
IC62	J-5
IC63	L-5
IC65	A-5
IC66	B-5
IC67	D-5
IC68	E-5
IC69	G-5
IC70	H-5
IC74	D-5
IC75	H-5
IC76	Q-5
IC77	N-5
IC78	Q-1
IC79	P-2
Q1	K-4
Q2	J-5
Q3	L-5
Q4	R-3
Q6	T-2
Q8	P-5
Q9	P-5
Q10	P-5
Q11	R-3
Q201	L-4
Q202	L-4
Q203	M-4
Q204	K-4
Q205	S-2
Q206	S-2
Q207	K-4
Q209	L-4
Q301	Q-3
Q502	F-4
Q503	E-4
Q505	C-4
Q506	C-4
Q507	C-5
Q508	C-5
Q509	D-2
Q510	E-4
RB101	H-1
RB102	H-2
RV1	T-4
RV2	T-5
RV3	R-4
RV4	Q-5
RV5	K-4
RV6	J-3
RV7	Q-5
RV8	Q-5
RV201	M-3
RV202	N-3
RV203	T-1
RV204	S-2
RV205	T-3
RV206	R-2

RV501	E-4
RV502	E-4
RV503	D-4
RV504	D-4
RV505	F-5
RV506	G-5
RV507	H-5
RV508	H-5
RV509	A-2
RV510	A-3
RV511	A-3
RV513	C-3
RV515	C-3
RV516	C-3
RV517	C-3
RV519	C-3
TP1	T-4
TP2	T-4
TP3	T-5
TP4	T-5
TP5	R-2
TP9	S-3
TP10	Q-4
TP12	R-4
TP13	Q-4
TP14	T-5
TP15	G-3
TP16	H-3
TP17	K-5
TP18	M-5
TP20	T-4
TP21	T-2
TP22	T-5
TP201	L-3
TP202	M-4
TP203	N-3
TP205	T-1
TP206	T-1
TP207	T-2
TP208	S-1
TP209	S-2
TP210	L-1
TP211	L-1
TP212	R-2
TP301	N-1
TP302	P-1
TP501	F-5
TP502	F-4
TP503	F-4
TP504	H-4
TP505	H-4
TP506	A-3
TP507	B-3
TP508	F-3
TP509	C-5
TP510	G-3
TP511	A-4
TP512	F-4
TP513	F-5
X1	R-5

SV-51 (SERVO SYSTEM)

Ref. No.	Type	Pin No. −15V	−5V	GND	+5V	+12V	+15V
IC 1	TC4081BP, MB84081B			7	14		
IC 2	TC4061BP, MB84081B			7	14		
IC 3	HD14538BP			8	16		
IC 4	TC4030BP			7	14		
IC 5	TC4069UBP, MB84069UB			7	14		
IC 6	TC4075BP			7	14		
IC 7	M5M4094RS			8	16		
IC 8	TC4021BP			8	16		
IC 9	TC4071BP			7	14		
IC 10	TC4030BP			7	14		
IC 11	TC4001BP, MB84001B			7	14		
IC 12	TC4053BP, MB84053B			8	16		
IC 13	TC4073BP			7	14		
IC 14	TC4518BP			8	16		
IC 15	TC4030BP			7	14		
IC 16	μPC358C, LM358P			4		8	
IC 17	μPC4558C, NJM4558D*			4		8	
IC 18	TC4532BP			8	16		
IC 19	TC4532BP			8	16		
IC 20	TC4081BP, MB84081B			7	14		
IC 21	TC4073BP			7	14		
IC 22	TC4081BP, MB84081B			7	14		
IC 23	HD14538BP			8	16		
IC 24	TC4071BP			7	14		
IC 25	M5M4094RS			8	16		
IC 26							
IC 27	TC4049BP, MB84049UB			8	1		
IC 28	TC4001BP, MB84001B			7	14		
IC 29	TC4053BP, MB84053B			8	16		
IC 30	TC4049BP, MB84049UB			8	1		
IC 31	TC4001BP, MB84001B			7	14		
IC 32	TC4516BP			8	16		
IC 33	TC4081BP, MB84081B			7	14		
IC 34	NJM2903D			4		8	
IC 35	NJM2903D			4		8	
IC 36	TC4051BP, MB84051B			8	16		
IC 37	TC4051BP, MB84051B			8	16		
IC 38	TC4053BP, MB84053B			8	16		
IC 39	HD14538BP			8	16		
IC 40	TC4030BP			7	14		
IC 41	TC4013BP, MB84013B			7	14		
IC 42	HD14538BP			8	16		
IC 43	TC4049BP, MB84049UB			8	1		
IC 44	HD14538BP			8	16		
IC 45	TC4049BP, MB84049UB			8	1		
IC 46	HD14538BP			8	16		
IC 47	TC4050BP			8	1		
IC 48	NJM2903D			4	8		
IC 49	TC4066BP			7		14	
IC 50	TC4049BP, MB84049UB			8	1		
IC 51	BX3915A		Refer to Schematic				
IC 52	TC5067BP			8	16		
IC 53	μPC358C, LM358P	4					8
IC 54	μPC358C, LM358P			4	8		
IC 55	μPC339C			12		3	
IC 56	TC4013BP, MB84013B			7	14		
IC 57	μPC4558C, NJM4558D	4					8
IC 58	μPC4558C, NJM4558D	4			8		
IC 59	NJM4558D-D	4			8		
IC 60	CX194B		Refer to Schematic				
IC 61	NJM4558D-FA	4					8
IC 62	BX1154		Refer to Schematic				
IC 63	BX1155		Refer to Schematic				
IC 64							
IC 65	μPC339C	11					4
IC 66	μPC358C, LM358P	4					8
IC 67	μPC324C			11		4	
IC 68	NJM2903D			4	8		
IC 69	μPC4558C, NJM4558D			4		8	
IC 70	μPC4558C, NJM4558D			4		8	
IC 71							
IC 72							
IC 73							
IC 74	TA78L005P, NJM78L05A		Refer to Schematic				
IC 75	μPC4558C, NJM4558D		4		8		
IC 76	HD14538BP			8	16		
IC 77	HD14538BP			8	16		
IC 78	TC4053BP, MB84053B			8	16		
IC 79	TC4066BP			7	14		

RB101, RB102
100K x 8

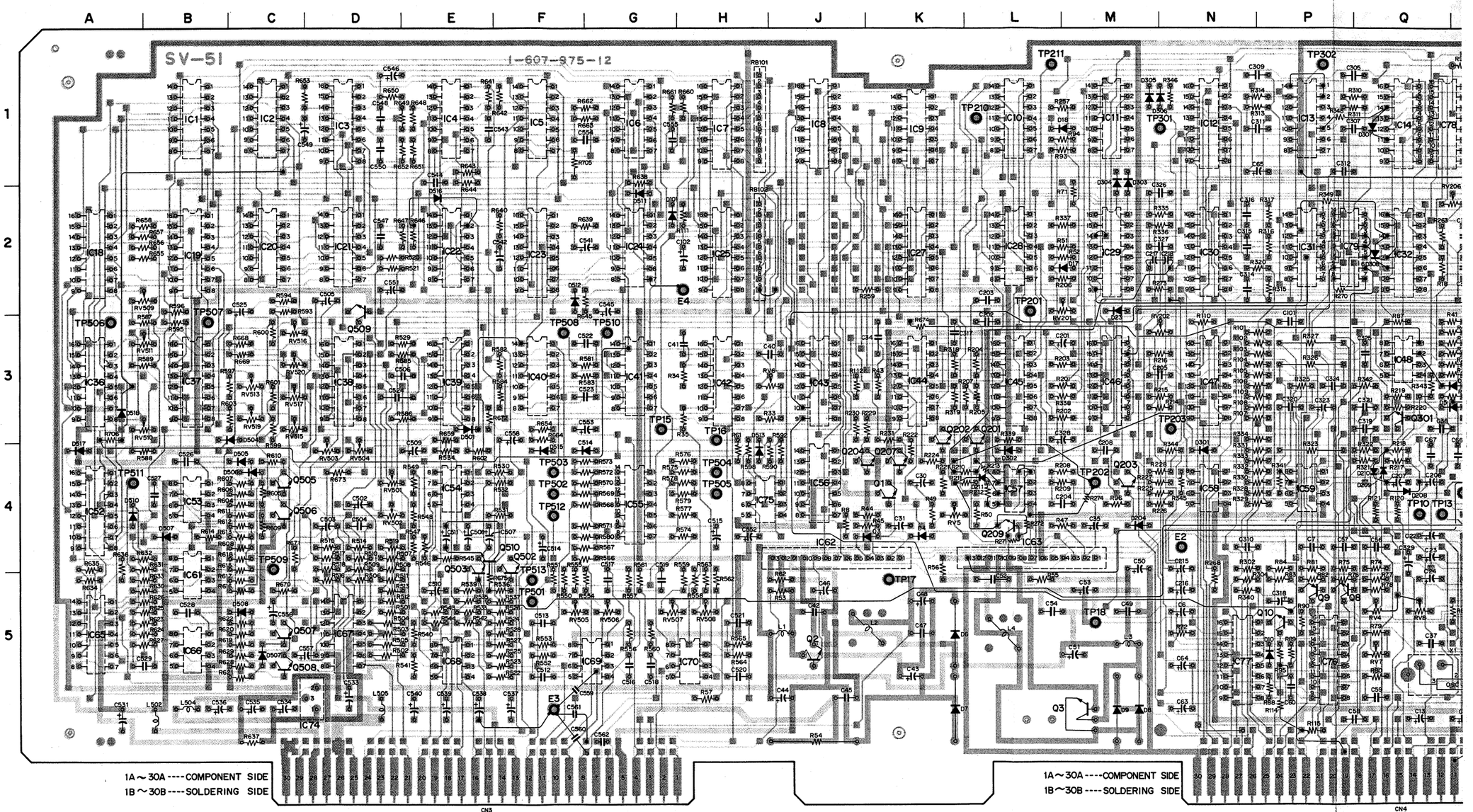

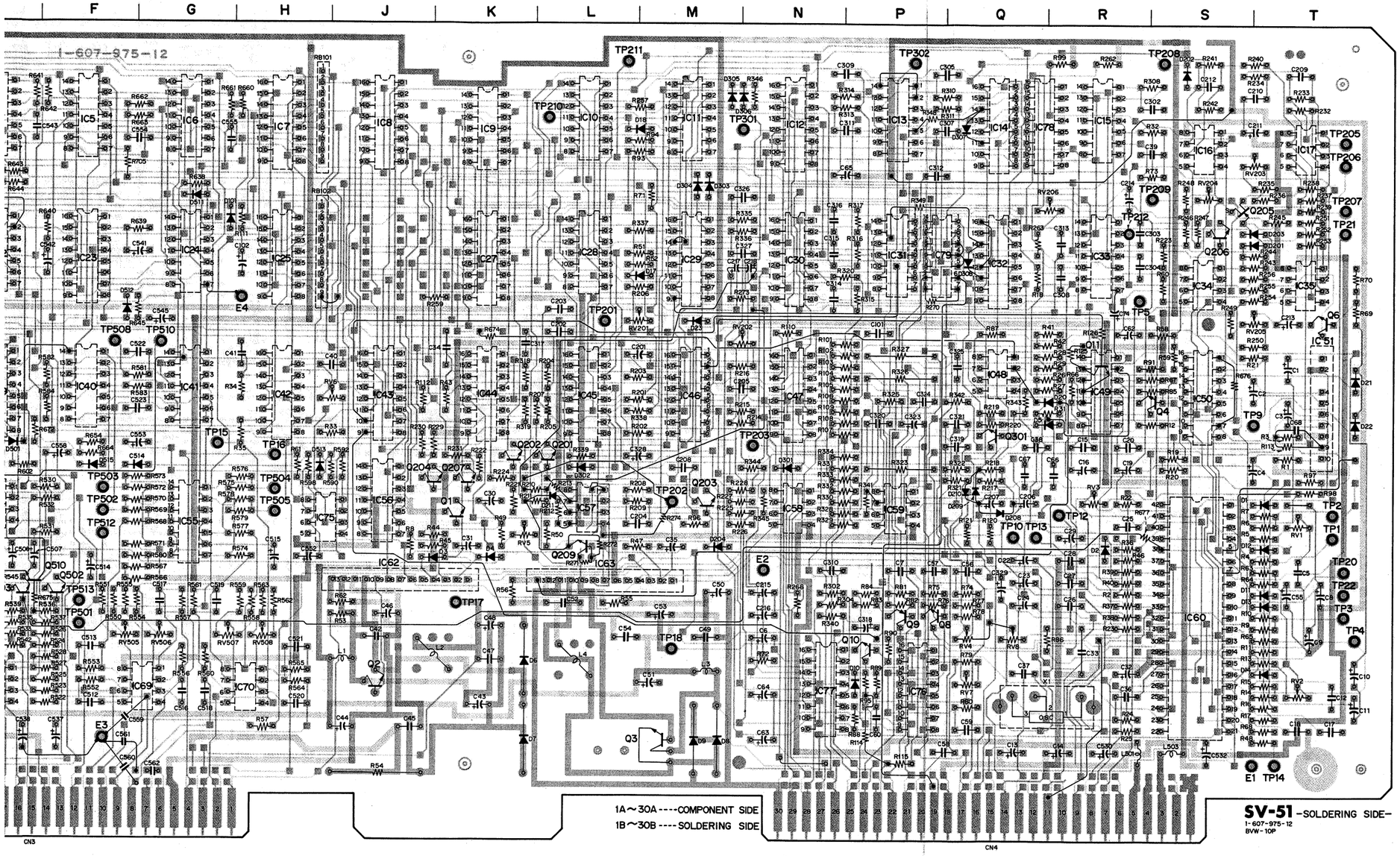

SV-51 -SOLDERING SIDE-
1-607-975-12
BVW-10P

D1	T-4	IC1	B-1	Q1	K-4	TP1	T-4
D2	R-4	IC2	C-1	Q2	J-5	TP2	T-4
D3	J-4	IC3	D-1	Q3	L-5	TP3	T-5
D4	J-4	IC4	E-1	Q4	R-3	TP4	T-5
D5	R-3	IC5	F-1	Q6	T-2	TP5	R-2
D6	K-5	IC6	G-1	Q8	P-5	TP9	S-3
D7	K-5	IC7	H-1	Q9	P-5	TP10	Q-4
D8	M-5	IC8	J-1	Q10	P-5	TP12	R-4
D9	M-5	IC9	K-1	Q11	R-3	TP13	Q-4
D10	P-5	IC10	L-1	Q201	L-4	TP14	T-5
D11	T-4	IC11	M-1	Q202	L-4	TP15	G-3
D12	T-4	IC12	N-1	Q203	M-4	TP16	H-3
D13	T-5	IC13	P-1	Q204	K-4	TP17	K-5
D14	T-5	IC14	Q-1	Q205	S-2	TP18	M-5
D17	M-2	IC15	R-1	Q206	S-2	TP20	T-4
D18	M-1	IC16	S-1	Q207	K-4	TP21	T-2
D20	R-3	IC17	T-1	Q209	L-4	TP22	T-5
D21	T-3	IC18	A-2	Q301	Q-3	TP201	L-3
D22	T-3	IC19	B-2	Q502	F-4	TP202	M-4
D23	M-3	IC20	C-2	Q503	E-4	TP203	N-3
D101	G-2	IC21	D-2	Q505	C-4	TP205	T-1
D201	T-2	IC22	E-2	Q506	C-4	TP206	T-1
D202	S-1	IC23	F-2	Q507	C-5	TP207	T-2
D203	T-2	IC24	G-2	Q508	C-5	TP208	S-1
D204	M-4	IC25	H-2	Q509	D-2	TP209	S-2
D208	Q-4	IC27	K-2	Q510	E-4	TP210	L-1
D209	Q-4	IC28	L-2			TP211	L-1
D210	Q-4	IC29	M-2	RB101	H-1	TP212	R-2
D211	L-4	IC30	N-2	RB102	H-2	TP301	N-1
D301	N-4	IC31	P-2			TP302	P-1
D302	L-4	IC32	Q-2	RV1	T-4	TP501	F-5
D303	M-2	IC33	R-2	RV2	T-5	TP502	F-4
D304	M-2	IC34	S-2	RV3	R-4	TP503	F-4
D305	M-1	IC35	T-2	RV4	Q-5	TP504	H-4
D306	M-1	IC36	A-3	RV5	K-4	TP505	H-4
D307	Q-1	IC37	B-3	RV6	J-3	TP506	A-3
D308	Q-2	IC38	D-3	RV7	Q-5	TP507	B-3
D501	E-3	IC39	E-3	RV8	Q-5	TP508	F-3
D504	C-3	IC40	F-3	RV201	M-3	TP509	C-5
D505	C-4	IC41	G-3	RV202	N-3	TP510	G-3
D506	C-4	IC42	H-3	RV203	T-1	TP511	A-4
D507	B-4	IC43	J-3	RV204	S-2	TP512	F-4
D508	C-5	IC44	K-3	RV205	T-3	TP513	F-5
D509	C-5	IC45	L-3	RV206	R-2		
D510	A-4	IC46	M-3	RV501	E-4	X1	R-5
D511	G-2	IC47	N-3	RV502	E-4		
D512	F-2	IC48	Q-3	RV503	D-4		
D513	H-3	IC49	R-3	RV504	D-4		
D514	G-3	IC50	S-3	RV505	F-5		
D515	F-3	IC51	T-3	RV506	G-5		
D516	E-2	IC52	A-4	RV507	H-5		
D517	A-4	IC53	B-4	RV508	H-5		
D518	A-3	IC54	E-4	RV509	A-2		
		IC55	G-4	RV510	A-3		
E1	S-5	IC56	J-4	RV511	A-3		
E2	N-4	IC57	L-4	RV513	C-3		
E3	F-5	IC58	N-4	RV515	C-3		
E4	H-2	IC59	P-4	RV516	C-3		
		IC60	S-4	RV517	C-3		
		IC61	B-5	RV519	C-3		
		IC62	J-5				
		IC63	L-5				
		IC65	A-5				
		IC66	B-5				
		IC67	D-5				
		IC68	E-5				
		IC69	G-5				
		IC70	H-5				
		IC74	D-5				
		IC75	H-4				
		IC76	Q-5				
		IC77	N-5				
		IC78	Q-1				
		IC79	P-2				

SV-51 (2/5) (SERVO SYSTEM)

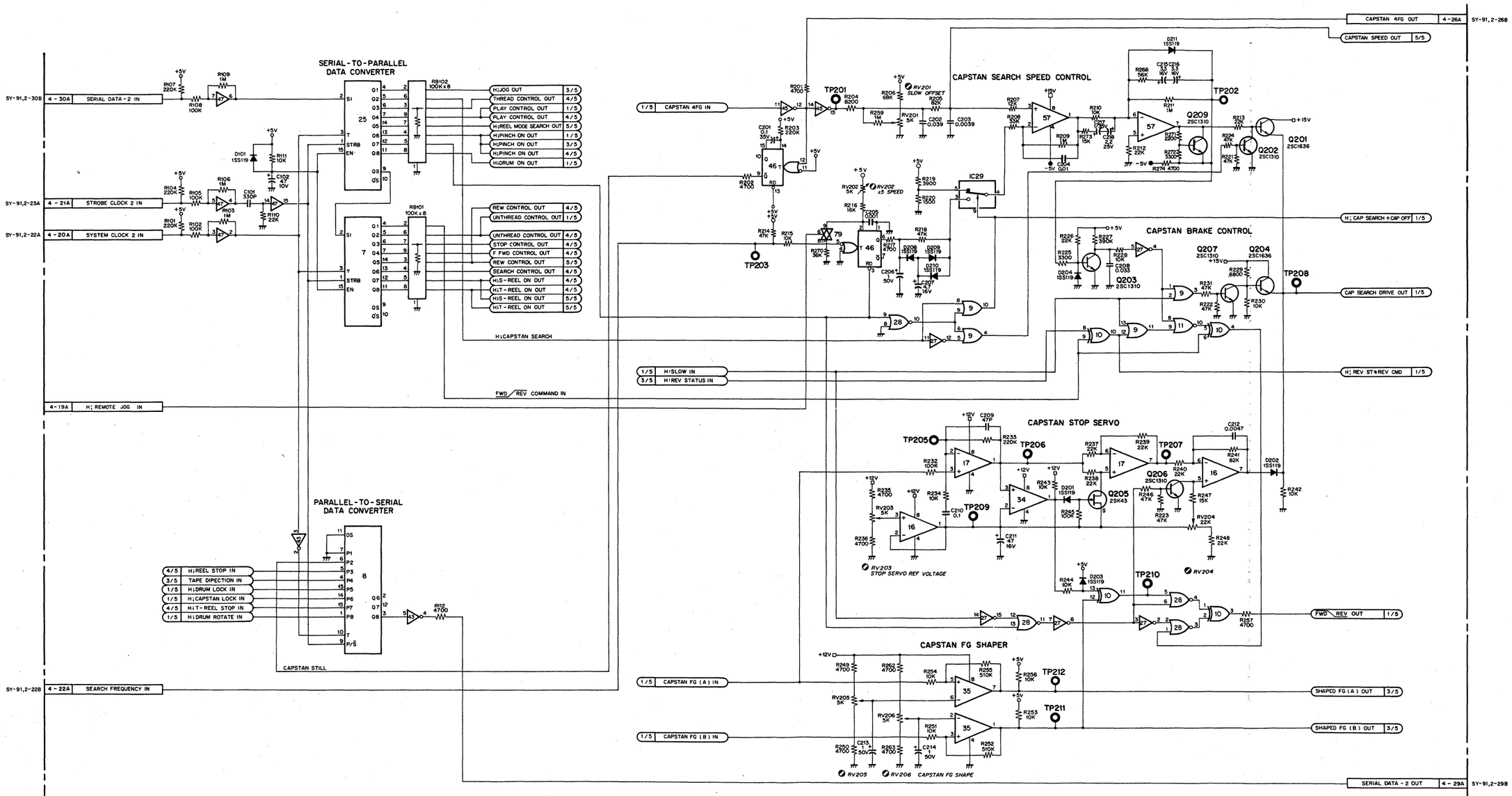

SV-51 (3/5) (SERVO SYSTEM)

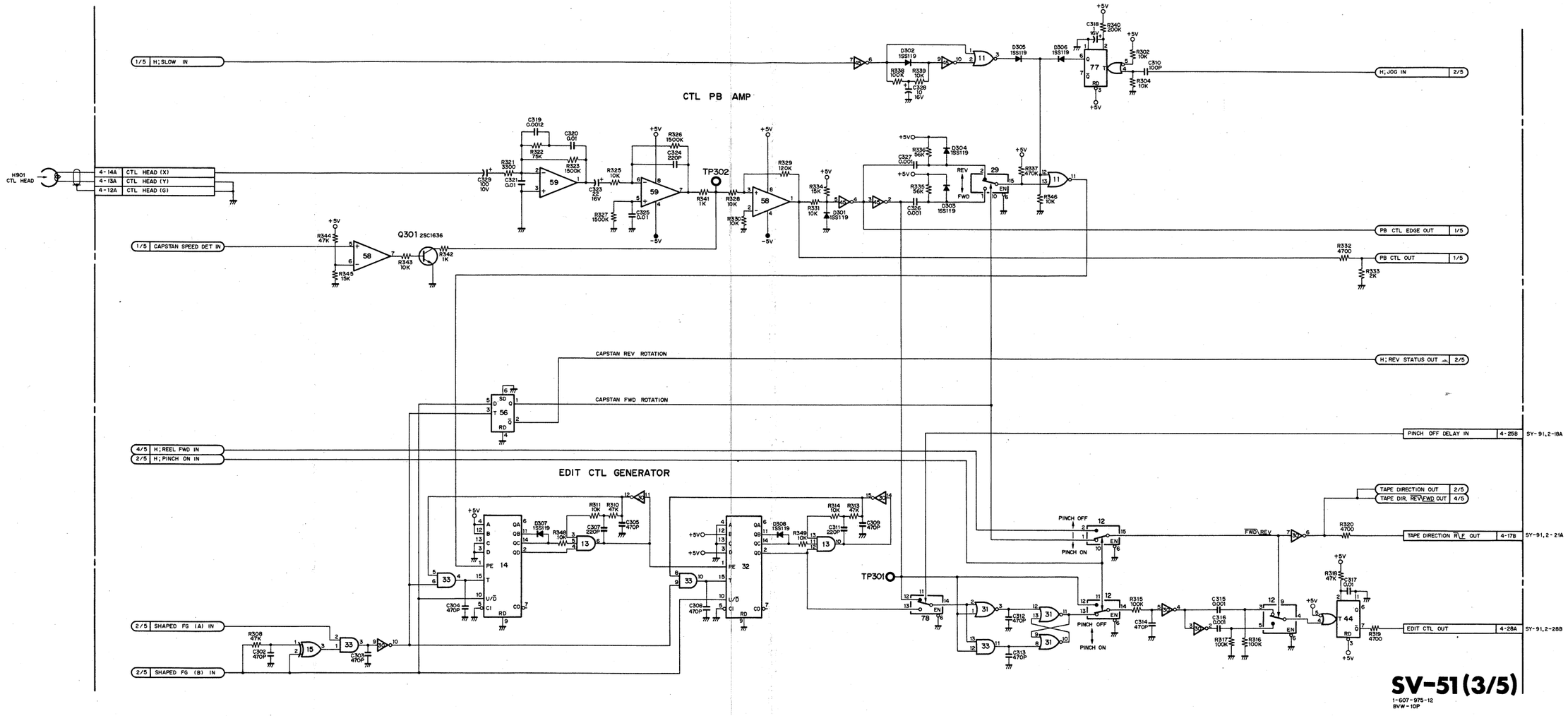

(ERVO SYSTEM)

Type	Pin No.					
	−15V	−5V	GND	+5V	+12V	+15V
TC4081BP, MB84081B			7	14		
TC4081BP, MB84081B			7	14		
HI 38BP			8	16		
TC 8BP			7	14		
TC UBP, MB84069UB			7	14		
TC 6BP			7	14		
MSM4094RS			8	16		
TC4021BP			7	14		
TC4071BP			7	14		
TC4030BP			7	14		
TC BP, MB84001B			7	14		
TC BP, MB84053B			7	14		
TC BP			8	16		
TC BP			7	14		
μPC358C, LM358P			4		8	
μPC4558C, NJM4558D			4		8	
TC4532BP			8	16		
TC 2BP			8	16		
TC BP, MB84081B			7	14		
TC BP			7	14		
TC BP, MB84081B			7	14		
HI 38BP			8	16		
TC4071BP			7	14		
MSM4094RS			8	16		
TC BP, MB84049UB			8	1		
TC BP, MB84001B			7	14		
TC BP, MB84053B			8	16		
TC BP, MB84049UB			8	1		
TC BP, MB84001B			7	14		
TC4516BP			8	16		
TC4081BP, MB84081B			7	14		
NJM2903D			4		8	
NJM2903D			4		8	
TC BP, MB84051B			8	16		
TC BP, MB84051B			8	16		
TC BP, MB84053B			8	16		
HI 38BP			8	16		
TC4030BP			7	14		
TC4013BP, MB84013B			7	14		
HD14538BP			8	16		
TC4049BP, MB84049UB			8	1		
HI 38BP			8	16		
TC 9BP, MB84049UB			8	1		
HI 38BP			8	16		
TC 0BP			8	1		
NJM2903D			4	8		
TC4066BP			7	14	14	
TC4049BP, MB84049UB			8	1		
BX3915A	Refer to Schematic					
TI 78P			8	16		
μI 8C, LM358P	4					8
μI 8C, LM358P			4	8		
μI 8C			12		3	
TC4013BP, MB84013B			7	14		
μPC4558C, NJM4558D		4				8
μPC4558C, NJM4558D		4		8		
NJM4558D-D		4		8		
C: B	Refer to Schematic					
N 58D-FA	4					8
B: 4	Refer to Schematic					
B: 5	Refer to Schematic					
μPC339C	11					4
μPC358C, LM358P	4					8
μPC324C			11		4	
N 03D			4	8		
μI 58C, NJM4558D			4		8	
μI 58C, NJM4558D			4		8	
TA78L005P, NJM78L05A	Refer to Schematic					
μPC4558C, NJM4558D		4		8		
H 38BP			8	16		
H 38BP			8	16		
T 3BP, MB84053B			8	16		
T 6BP			7	14		

RB101, RB102
100K x 8

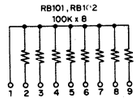

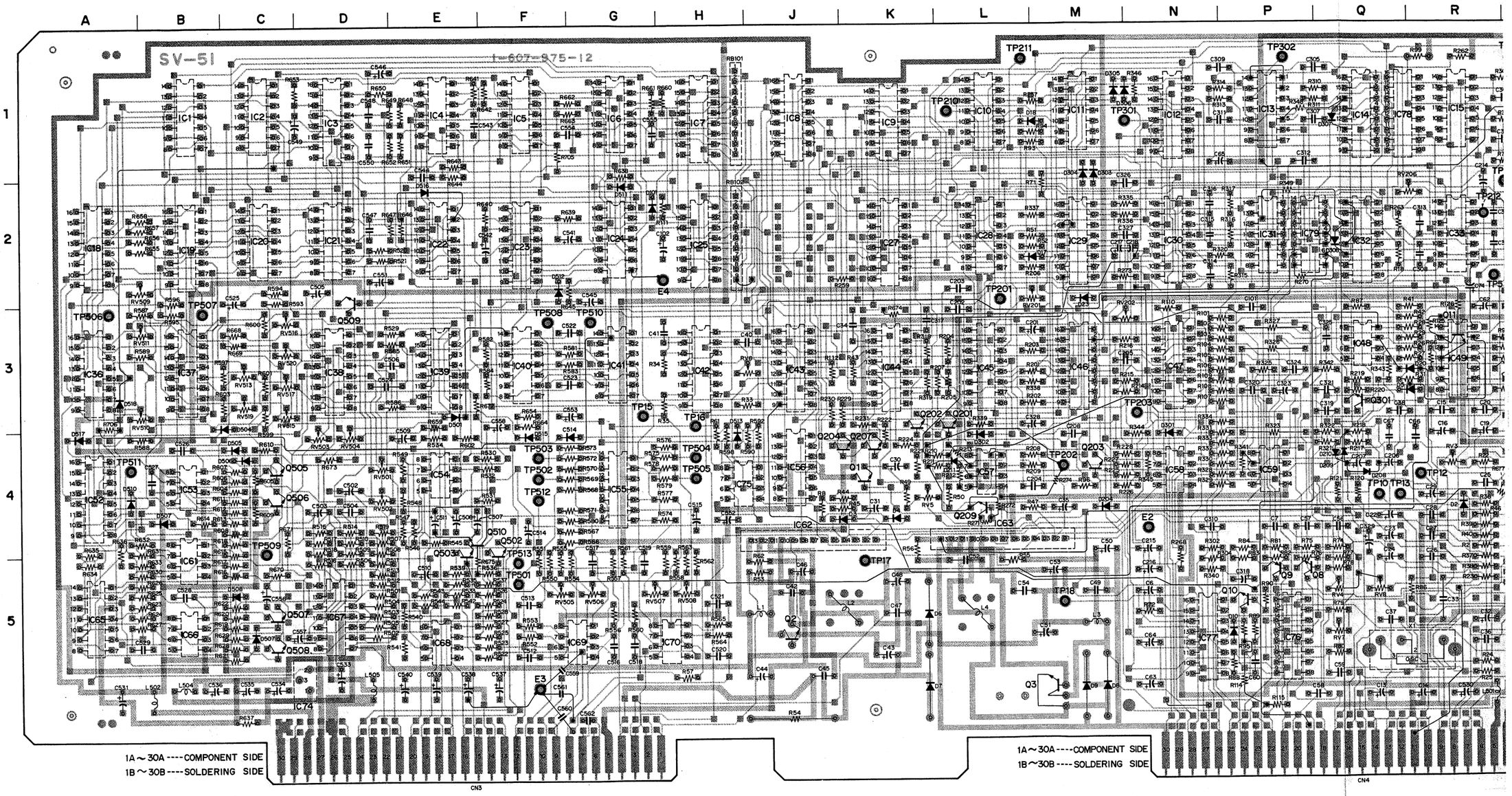

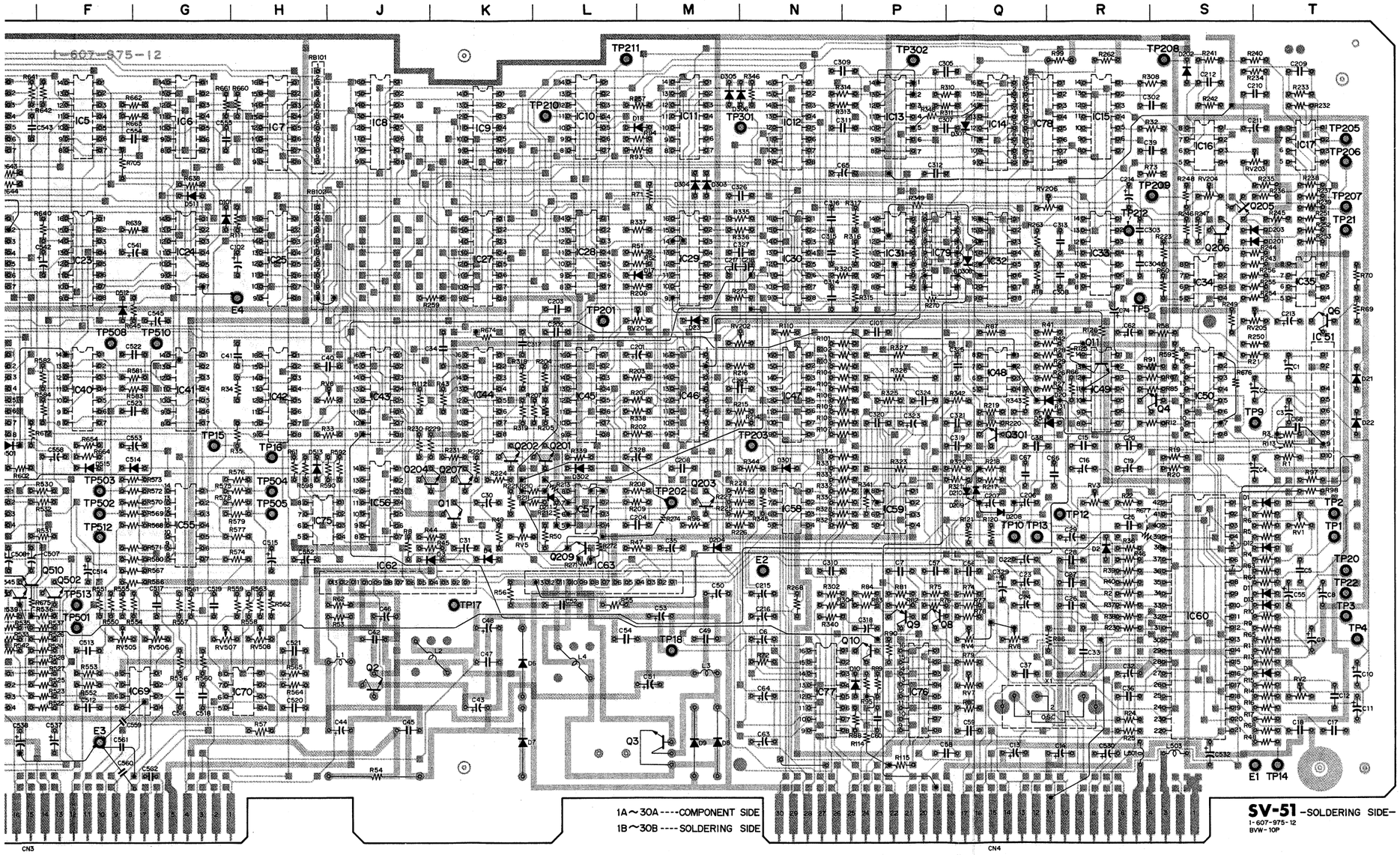

SV-51 -SOLDERING SIDE-
1-607-975-12
BVW-10P

D1	T-4	IC1	B-1	Q1	K-4	TP1	T-4
D2	R-4	IC2	C-1	Q2	J-5	TP2	T-4
D3	J-4	IC3	D-1	Q3	L-5	TP3	T-5
D4	J-4	IC4	E-1	Q4	R-3	TP4	T-5
D5	R-3	IC5	F-1	Q6	T-2	TP5	R-2
D6	K-5	IC6	G-1	Q8	P-5	TP9	S-3
D7	K-5	IC7	H-1	Q9	P-5	TP10	Q-4
D8	M-5	IC8	J-1	Q10	P-5	TP12	R-4
D9	M-5	IC9	K-1	Q11	R-3	TP13	Q-4
D10	P-5	IC10	L-1	Q201	L-4	TP14	T-5
D11	T-4	IC11	M-1	Q202	L-4	TP15	G-3
D12	T-4	IC12	N-1	Q203	M-4	TP16	H-3
D13	T-5	IC13	P-1	Q204	K-4	TP17	K-5
D14	T-5	IC14	Q-1	Q205	S-2	TP18	M-5
D17	M-2	IC15	R-1	Q206	S-2	TP20	T-4
D18	M-1	IC16	S-1	Q207	K-4	TP21	T-2
D20	R-3	IC17	T-1	Q209	L-4	TP22	T-5
D21	T-3	IC18	A-2	Q301	Q-3	TP201	L-3
D22	T-3	IC19	B-2	Q502	F-4	TP202	M-4
D23	M-3	IC20	C-2	Q503	E-4	TP203	N-3
D101	G-2	IC21	D-2	Q505	C-4	TP205	T-1
D201	T-2	IC22	E-2	Q506	C-4	TP206	T-1
D202	S-1	IC23	F-2	Q507	C-5	TP207	T-2
D203	T-2	IC24	G-2	Q508	C-5	TP208	S-1
D204	M-4	IC25	H-2	Q509	D-2	TP209	S-2
D208	Q-4	IC27	K-2	Q510	E-4	TP210	L-1
D209	Q-4	IC28	L-2			TP211	L-1
D210	Q-4	IC29	M-2	RB101	H-1	TP212	R-2
D211	L-4	IC30	N-2	RB102	H-2	TP301	N-1
D301	N-4	IC31	P-2			TP302	P-1
D302	L-4	IC32	Q-2	RV1	T-4	TP501	F-5
D303	M-2	IC33	R-2	RV2	T-5	TP502	F-4
D304	M-2	IC34	S-2	RV3	R-4	TP503	F-4
D305	M-1	IC35	T-2	RV4	Q-5	TP504	H-4
D306	M-1	IC36	A-3	RV5	K-4	TP505	H-4
D307	Q-1	IC37	B-3	RV6	J-3	TP506	A-3
D308	Q-2	IC38	D-3	RV7	Q-5	TP507	B-3
D501	E-3	IC39	E-3	RV8	Q-5	TP508	F-3
D504	C-3	IC40	F-3	RV201	M-3	TP509	C-5
D505	C-4	IC41	G-3	RV202	N-3	TP510	G-3
D506	C-4	IC42	H-3	RV203	T-1	TP511	A-4
D507	B-4	IC43	J-3	RV204	S-2	TP512	F-4
D508	C-5	IC44	K-3	RV205	T-3	TP513	F-5
D509	C-5	IC45	L-3	RV206	R-2		
D510	A-4	IC46	M-3	RV501	E-4	X1	R-5
D511	G-2	IC47	N-3	RV502	E-4		
D512	F-2	IC48	Q-3	RV503	D-4		
D513	H-3	IC49	R-3	RV504	D-4		
D514	G-3	IC50	S-3	RV505	F-5		
D515	F-3	IC51	T-3	RV506	G-5		
D516	E-2	IC52	A-4	RV507	H-5		
D517	A-4	IC53	B-4	RV508	H-5		
D518	A-3	IC54	E-4	RV509	A-2		
		IC55	G-4	RV510	A-3		
E1	S-5	IC56	J-4	RV511	A-3		
E2	N-4	IC57	L-4	RV513	C-3		
E3	F-5	IC58	N-4	RV515	C-3		
E4	H-2	IC59	P-4	RV516	C-3		
		IC60	S-4	RV517	C-3		
		IC61	B-5	RV519	C-3		
		IC62	J-5				
		IC63	L-5				
		IC65	A-5				
		IC66	B-5				
		IC67	D-5				
		IC68	E-5				
		IC69	G-5				
		IC70	H-5				
		IC74	D-5				
		IC75	H-5				
		IC76	Q-5				
		IC77	N-5				
		IC78	Q-1				
		IC79	P-2				

SV-51 (SERVO SYSTEM)

Ref. No.	Type	Pin No. −15V	−5V	GND	+5V	+12V	+15V
IC 1	TC4081BP, MB84081B			7	14		
IC 2	TC4081BP, MB84081B			7	14		
IC 3	HD14538BP			8	16		
IC 4	TC4030BP			7	14		
IC 5	TC4069UBP, MB84069UB			7	14		
IC 6	TC4075BP			7	14		
IC 7	MSM4094RS			8	16		
IC 8	TC4021BP			8	16		
IC 9	TC4071BP			7	14		
IC 10	TC4030BP			7	14		
IC 11	TC4001BP, MB84001B			7	14		
IC 12	TC4053BP, MB84053B			8	16		
IC 13	TC4073BP			7	14		
IC 14	TC4516BP			8	16		
IC 15	TC4030BP			7	14		
IC 16	μPC358C, LM358P			4		8	
IC 17	μPC4558C, NJM4558D			4		8	
IC 18	TC4532BP			8	16		
IC 19	TC4532BP			8	16		
IC 20	TC4081BP, MB84081B			7	14		
IC 21	TC4073BP			7	14		
IC 22	TC4081BP, MB84081B			7	14		
IC 23	HD14538BP			8	16		
IC 24	TC4071BP			7	14		
IC 25	MSM4094RS			8	16		
IC 26							
IC 27	TC4049BP, MB84049UB			8	1		
IC 28	TC4001BP, MB84001B			7	14		
IC 29	TC4053BP, MB84053B			8	16		
IC 30	TC4049BP, MB84049UB			8	1		
IC 31	TC4001BP, MB84001B			7	14		
IC 32	TC4516BP			8	16		
IC 33	TC4081BP, MB84081B			7	14		
IC 34	NJM2903D			4		8	
IC 35	NJM2903D			4		8	
IC 36	TC4051BP, MB84051B			8	16		
IC 37	TC4051BP, MB84051B			8	16		
IC 38	TC4053BP, MB84053B			8	16		
IC 39	HD14538BP			8	16		
IC 40	TC4030BP			7	14		
IC 41	TC4013BP, MB84013B			7	14		
IC 42	HD14538BP			8	16		
IC 43	TC4049BP, MB84049UB			8	1		
IC 44	HD14538BP			8	16		
IC 45	TC4049BP, MB84049UB			8	1		
IC 46	HD14538BP			8	16		
IC 47	TC4050BP			8	1		
IC 48	NJM2903D			4	8		
IC 49	TC4066BP			7		14	
IC 50	TC4049BP, MB84049UB			8	1		
IC 51	BX3915A			Refer to Schematic			
IC 52	TC5067BP			8	16		
IC 53	μPC358C, LM358P	4					8
IC 54	μPC358C, LM358P			4	8		
IC 55	μPC339C			12		.3	
IC 56	TC4013BP, MB84013B			7	14		
IC 57	μPC4558C, NJM4558D	4					8
IC 58	μPC4558C, NJM4558D	4			8		
IC 59	NJM4558D-D	4			8		
IC 60	CX194B			Refer to Schematic			
IC 61	NJM4558D-FA	4					8
IC 62	BX1154			Refer to Schematic			
IC 63	BX1155			Refer to Schematic			
IC 64							
IC 65	μPC339C	11					4
IC 66	μPC358C, LM358P	4					8
IC 67	μPC324C			11		4	
IC 68	NJM2903D			4	8		
IC 69	μPC4558C, NJM4558D			4		8	
IC 70	μPC4558C, NJM4558D			4		8	
IC 71							
IC 72							
IC 73							
IC 74	TA78L005P, NJM78L05A			Refer to Schematic			
IC 75	μPC4558C, NJM4558D		4		8		
IC 76	HD14538BP			8	16		
IC 77	HD14538BP			8	16		
IC 78	TC4053BP, MB84053B			8	16		
IC 79	TC4066BP			7	14		

RB101, RB102
100K × 8

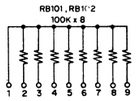

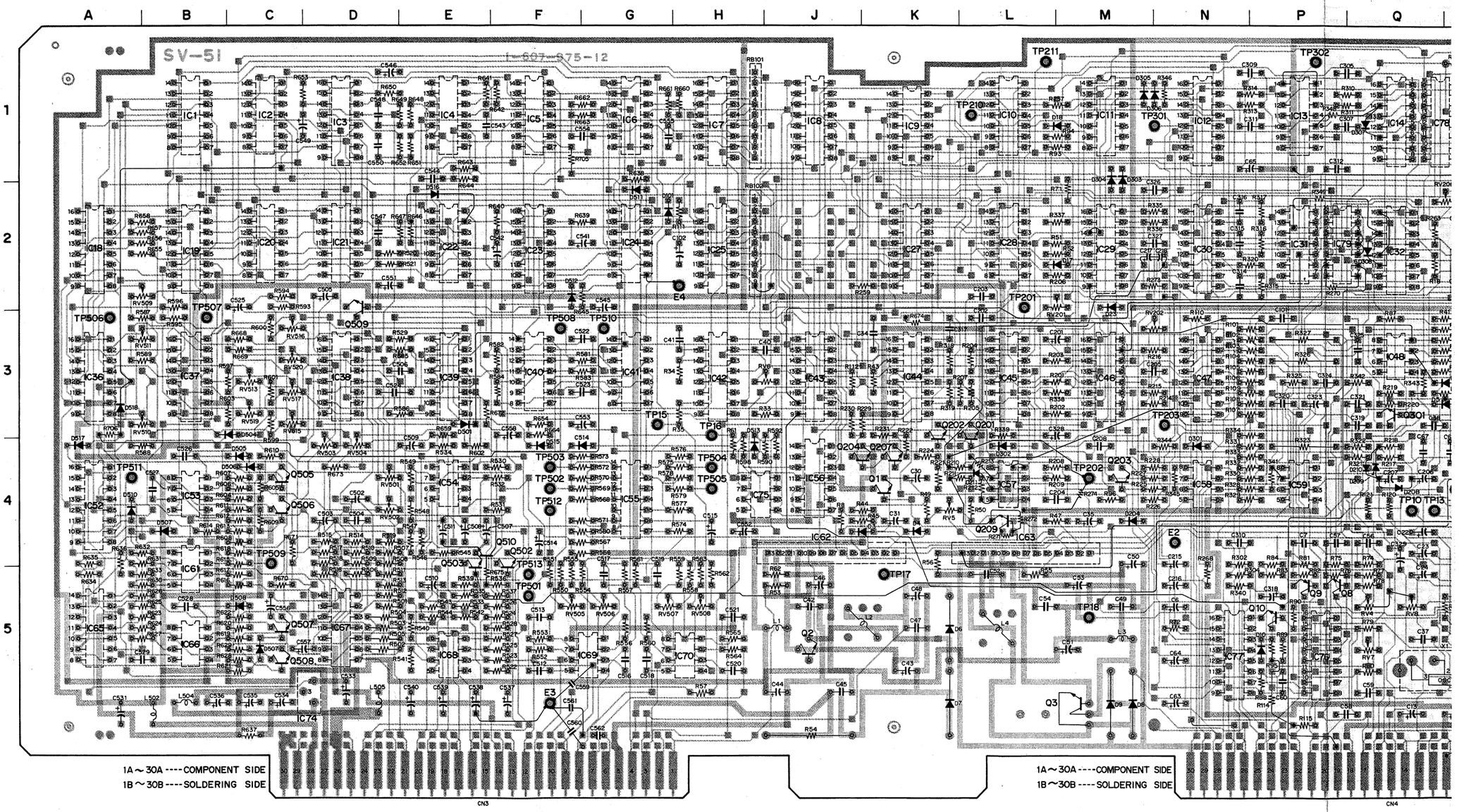

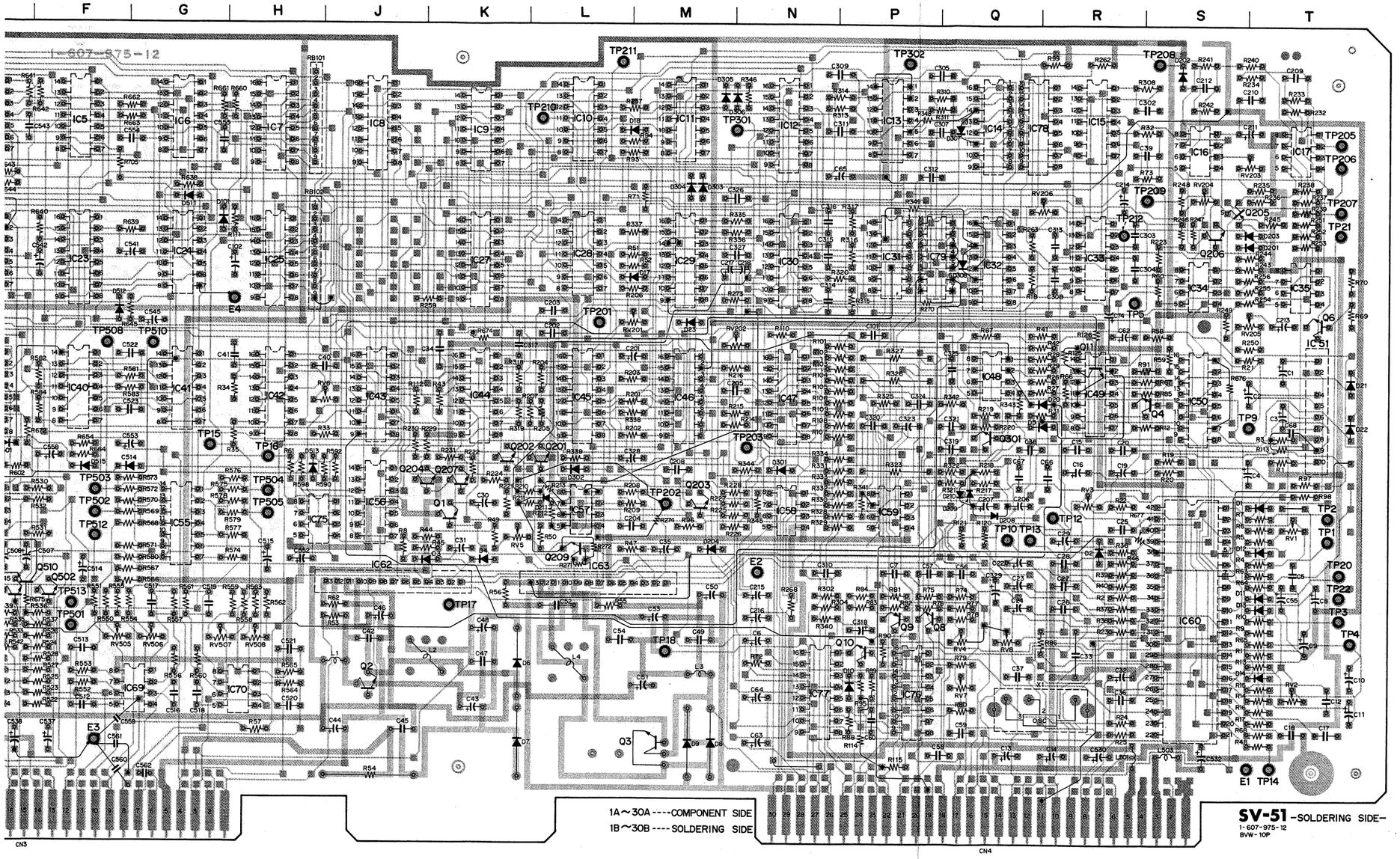

D1	T-4	IC1	B-1	Q1	K-4	TP1	T-4
D2	R-4	IC2	C-1	Q2	J-5	TP2	T-4
D3	J-4	IC3	D-1	Q3	L-5	TP3	T-5
D4	J-4	IC4	E-1	Q4	R-3	TP4	T-5
D5	R-3	IC5	F-1	Q6	T-2	TP5	R-2
D6	K-5	IC6	G-1	Q8	P-5	TP9	S-3
D7	K-5	IC7	H-1	Q9	P-5	TP10	Q-4
D8	M-5	IC8	J-1	Q10	P-5	TP12	R-4
D9	M-5	IC9	K-1	Q11	R-3	TP13	Q-4
D10	P-5	IC10	L-1	Q201	L-4	TP14	T-5
D11	T-4	IC11	M-1	Q202	L-4	TP15	G-3
D12	T-4	IC12	N-1	Q203	M-4	TP16	H-3
D13	T-5	IC13	P-1	Q204	K-4	TP17	K-5
D14	T-5	IC14	Q-1	Q205	S-2	TP18	M-5
D17	M-2	IC15	R-1	Q206	S-2	TP20	T-4
D18	M-1	IC16	S-1	Q207	K-4	TP21	T-2
D20	R-3	IC17	T-1	Q209	L-4	TP22	T-5
D21	T-3	IC18	A-2	Q301	Q-3	TP201	L-3
D22	T-3	IC19	B-2	Q502	F-4	TP202	M-4
D23	M-3	IC20	C-2	Q503	E-4	TP203	N-3
D101	G-2	IC21	D-2	Q505	C-4	TP205	T-1
D201	T-2	IC22	E-2	Q506	C-4	TP206	T-1
D202	S-1	IC23	F-2	Q507	C-5	TP207	T-2
D203	T-2	IC24	G-2	Q508	C-5	TP208	S-1
D204	M-4	IC25	H-2	Q509	D-2	TP209	S-2
D208	Q-4	IC27	K-2	Q510	E-4	TP210	L-1
D209	Q-4	IC28	L-2			TP211	L-1
D210	Q-4	IC29	M-2	RB101	H-1	TP212	R-2
D211	L-4	IC30	N-2	RB102	H-2	TP301	N-1
D301	N-4	IC31	P-2			TP302	P-1
D302	L-4	IC32	Q-2	RV1	T-4	TP501	F-5
D303	M-2	IC33	R-2	RV2	T-5	TP502	F-4
D304	M-2	IC34	S-2	RV3	R-4	TP503	F-4
D305	M-1	IC35	T-2	RV4	Q-5	TP504	H-4
D306	M-1	IC36	A-3	RV5	K-4	TP505	H-4
D307	Q-1	IC37	B-3	RV6	J-3	TP506	A-3
D308	Q-2	IC38	D-3	RV7	Q-5	TP507	B-3
D501	E-3	IC39	E-3	RV8	Q-5	TP508	F-3
D504	C-3	IC40	F-3	RV201	M-3	TP509	C-5
D505	C-4	IC41	G-3	RV202	N-3	TP510	G-3
D506	C-4	IC42	H-3	RV203	T-1	TP511	A-4
D507	B-4	IC43	J-3	RV204	S-2	TP512	F-4
D508	C-5	IC44	K-3	RV205	T-3	TP513	F-5
D509	C-5	IC45	L-3	RV206	R-2		
D510	A-4	IC46	M-3	RV501	E-4	X1	R-5
D511	G-2	IC47	N-3	RV502	E-4		
D512	F-2	IC48	Q-3	RV503	D-4		
D513	H-3	IC49	R-3	RV504	D-4		
D514	G-3	IC50	S-3	RV505	F-5		
D515	F-3	IC51	T-3	RV506	G-5		
D516	E-2	IC52	A-4	RV507	H-5		
D517	A-4	IC53	B-4	RV508	H-5		
D518	A-3	IC54	E-4	RV509	A-2		
		IC55	G-4	RV510	A-3		
E1	S-5	IC56	J-4	RV511	A-3		
E2	N-4	IC57	L-4	RV513	C-3		
E3	F-5	IC58	N-4	RV515	C-3		
E4	H-2	IC59	P-4	RV516	C-3		
		IC60	S-4	RV517	C-3		
		IC61	B-5	RV519	C-3		
		IC62	J-5				
		IC63	L-5				
		IC65	A-5				
		IC66	B-5				
		IC67	D-5				
		IC68	E-5				
		IC69	G-5				
		IC70	H-5				
		IC74	D-5				
		IC75	H-4				
		IC76	Q-5				
		IC77	N-5				
		IC78	Q-1				
		IC79	P-2				

SV-51 (4/5) (SERVO SYSTEM)

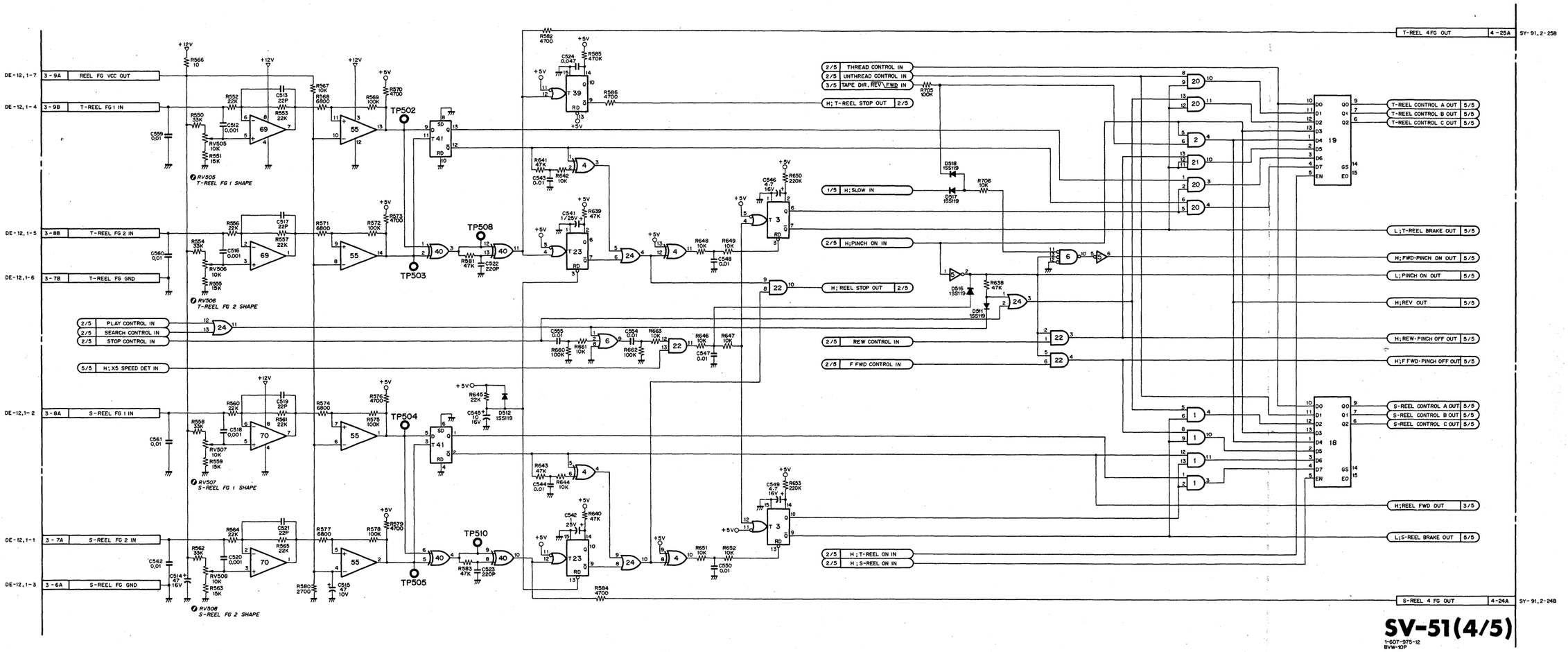

SV-51 (5/5) (SERVO SYSTEM)

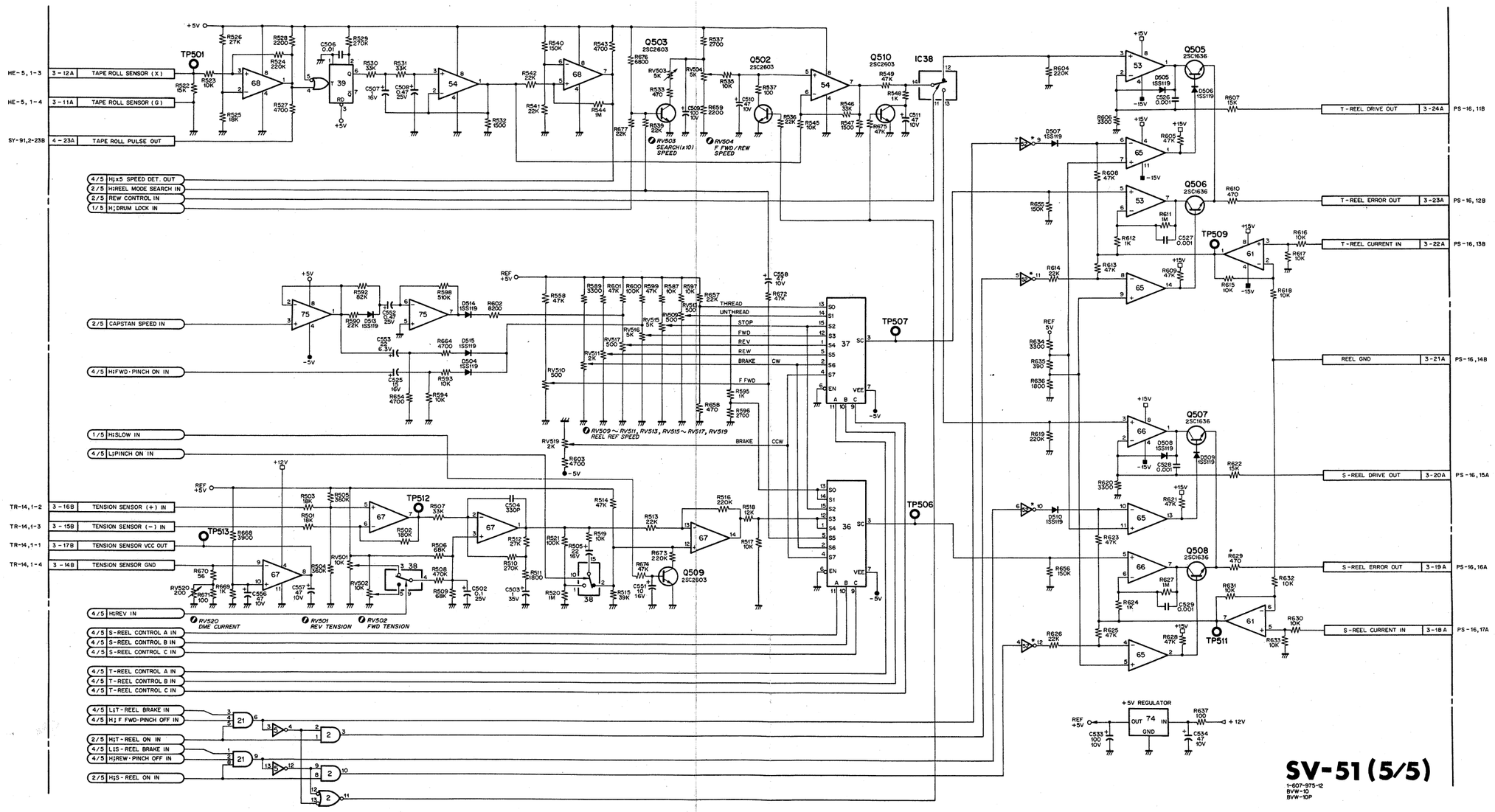

V-51 (SERVO SYSTEM)

Ref. No.	Type	Pin No. −15V	−5V	GND	+5V	+12V	+15V
IC 1	TC4081BP, MB84081B			7	14		
IC 2	TC4081BP, MB84081B			7	14		
IC 3	HD14538BP			8	16		
IC 4	TC4030BP			7	14		
IC 5	TC4069UBP, MB84069UB			7	14		
IC 6	TC4075BP			7	14		
IC 7	MSM4094RS			8	16		
IC 8	TC4021BP			8	16		
IC 9	TC4071BP			7	14		
IC 10	TC4030BP			7	14		
IC 11	TC4001BP, MB84001B			7	14		
IC 12	TC4053BP, MB84053B			8	16		
IC 13	TC4073BP			7	14		
IC 14	TC4516BP			8	16		
IC 15	TC4030BP			7	14		
IC 16	μPC358C, LM358P			4		8	
IC 17	μPC4558C, NJM4558D			4		8	
IC 18	TC4532BP			8	16		
IC 19	TC4532BP			8	16		
IC 20	TC4081BP, MB84081B			7	14		
IC 21	TC4073BP			7	14		
IC 22	TC4081BP, MB84081B			7	14		
IC 23	HD14538BP			8	16		
IC 24	TC4071BP			7	14		
IC 25	MSM4094RS			8	16		
IC 26							
IC 27	TC4049BP, MB84049UB			8	1		
IC 28	TC4001BP, MB84001B			7	14		
IC 29	TC4053BP, MB84053B			8	16		
IC 30	TC4049BP, MB84049UB			8	1		
IC 31	TC4001BP, MB84001B			7	14		
IC 32	TC4516BP			8	16		
IC 33	TC4081BP, MB84081B			7	14		
IC 34	NJM2903D			4		8	
IC 35	NJM2903D			4		8	
IC 36	TC4051BP, MB84051B			8	16		
IC 37	TC4051BP, MB84051B			8	16		
IC 38	TC4053BP, MB84053B			8	16		
IC 39	HD14538BP			8	16		
IC 40	TC4030BP			7	14		
IC 41	TC4013BP, MB84013B			7	14		
IC 42	HD14538BP			8	16		
IC 43	TC4049BP, MB84049UB			8	1		
IC 44	HD14538BP			8	16		
IC 45	TC4049BP, MB84049UB			8	1		
IC 46	HD14538BP			8	16		
IC 47	TC4050BP			8	1		
IC 48	NJM2903D			4	8		
IC 49	TC4066BP			7		14	
IC 50	TC4049BP, MB84049UB			8	1		
IC 51	BX3915A	Refer to Schematic					
IC 52	TC5067BP			8	16		
IC 53	μPC358C, LM358P	4					8
IC 54	μPC358C, LM358P			4	8		
IC 55	μPC339C			12		3	
IC 56	TC4013BP, MB84013B			7	14		
IC 57	μPC4558C, NJM4558D	4					8
IC 58	μPC4558C, NJM4558D	4			8		
IC 59	NJM4558D-D	4			8		
IC 60	CX194B	Refer to Schematic					
IC 61	NJM4558D-FA	4					8
IC 62	BX1154	Refer to Schematic					
IC 63	BX1155	Refer to Schematic					
IC 64							
IC 65	μPC339C	11					4
IC 66	μPC358C, LM358P	4					8
IC 67	μPC324C			11		4	
IC 68	NJM2903D			4	8		
IC 69	μPC4558C, NJM4558D			4		8	
IC 70	μPC4558C, NJM4558D			4		8	
IC 71							
IC 72							
IC 73							
IC 74	TA78L005P, NJM78L05A	Refer to Schematic					
IC 75	μPC4558C, NJM4558D	4			8		
IC 76	HD14538BP			8	16		
IC 77	HD14538BP			8	16		
IC 78	TC4053BP, MB84053B			8	16		
IC 79	TC4066BP			7	14		

RB101, RB102
100k x 8

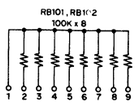

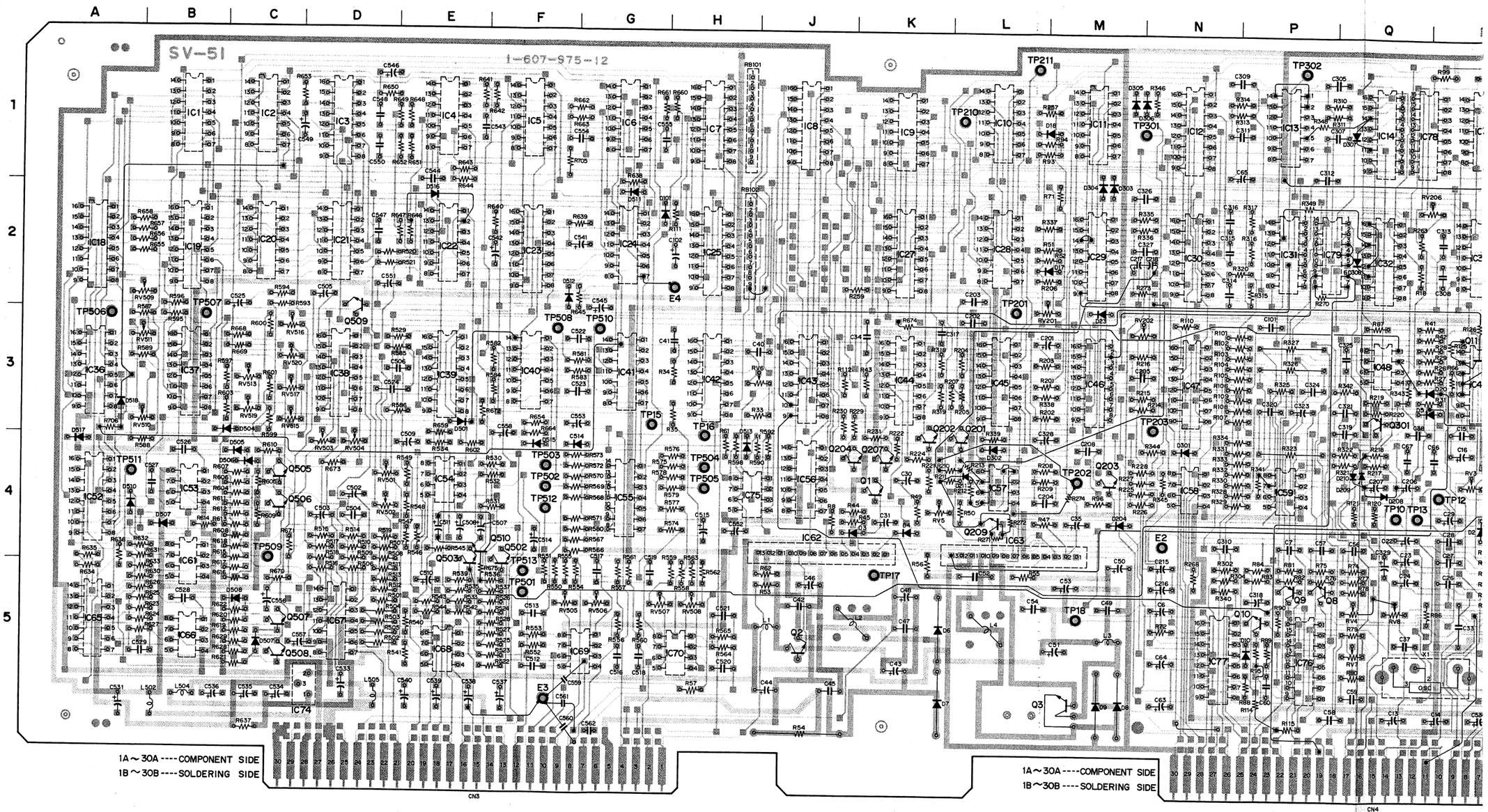

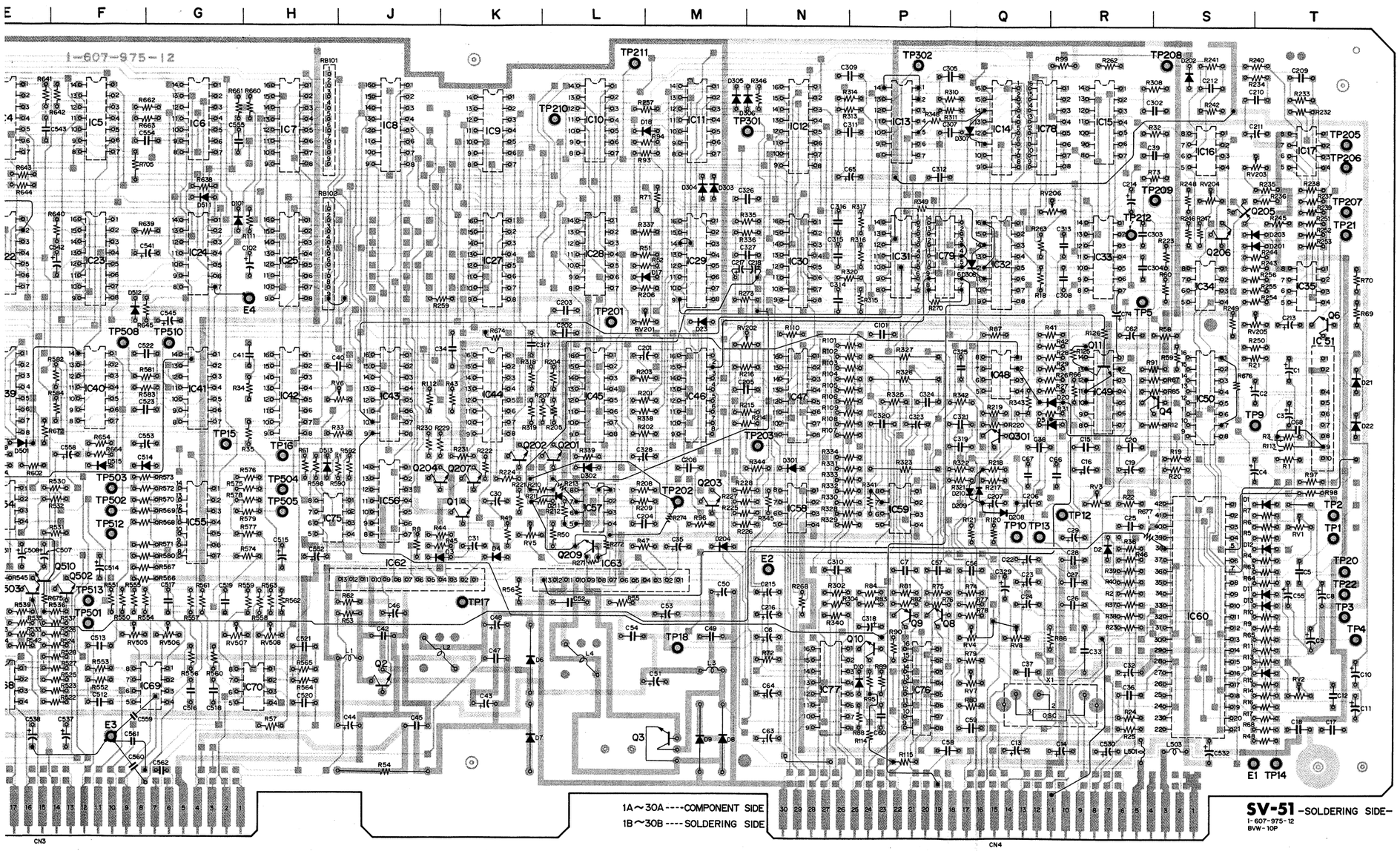

SV-51 -SOLDERING SIDE-
1-607-975-12
BVW-10P

D1	T-4
D2	R-4
D3	J-4
D4	J-4
D5	R-3
D6	K-5
D7	K-5
D8	M-5
D9	M-5
D10	P-5
D11	T-4
D12	T-4
D13	T-5
D14	T-5
D17	M-2
D18	M-1
D20	R-3
D21	T-3
D22	T-3
D23	M-3
D101	G-2
D201	T-2
D202	S-1
D203	T-2
D204	M-4
D208	Q-4
D209	Q-4
D210	Q-4
D211	L-4
D301	N-4
D302	L-4
D303	M-2
D304	M-2
D305	M-1
D306	M-1
D307	Q-1
D308	Q-2
D501	E-3
D504	C-3
D505	C-4
D506	C-4
D507	B-4
D508	C-5
D509	C-5
D510	A-4
D511	G-2
D512	F-2
D513	H-3
D514	G-3
D515	F-3
D516	E-2
D517	A-4
D518	A-3
E1	S-5
E2	N-4
E3	F-5
E4	H-2

IC1	B-1
IC2	C-1
IC3	D-1
IC4	E-1
IC5	F-1
IC6	G-1
IC7	H-1
IC8	J-1
IC9	K-1
IC10	L-1
IC11	M-1
IC12	N-1
IC13	P-1
IC14	Q-1
IC15	R-1
IC16	S-1
IC17	T-1
IC18	A-2
IC19	B-2
IC20	C-2
IC21	D-2
IC22	E-2
IC23	F-2
IC24	G-2
IC25	H-2
IC27	K-2
IC28	L-2
IC29	M-2
IC30	N-2
IC31	P-2
IC32	Q-2
IC33	R-2
IC34	S-2
IC35	T-2
IC36	A-3
IC37	B-3
IC38	D-3
IC39	E-3
IC40	F-3
IC41	G-3
IC42	H-3
IC43	J-3
IC44	K-3
IC45	L-3
IC46	M-3
IC47	N-3
IC48	Q-3
IC49	R-3
IC50	S-3
IC51	T-3
IC52	A-4
IC53	B-4
IC54	E-4
IC55	G-4
IC56	J-4
IC57	L-4
IC58	N-4
IC59	P-4
IC60	S-4
IC61	B-5
IC62	J-5
IC63	L-5
IC65	A-5
IC66	B-5
IC67	D-5
IC68	E-5
IC69	G-5
IC70	H-5
IC74	D-5
IC75	H-5
IC76	Q-5
IC77	N-5
IC78	Q-1
IC79	P-2

Q1	K-4
Q2	J-5
Q3	L-5
Q4	R-3
Q6	T-2
Q8	P-5
Q9	P-5
Q10	P-5
Q11	R-3
Q201	L-4
Q202	L-4
Q203	M-4
Q204	K-4
Q205	S-2
Q206	S-2
Q207	K-4
Q209	L-4
Q301	Q-3
Q502	F-4
Q503	E-4
Q505	C-4
Q506	C-4
Q507	C-5
Q508	C-5
Q509	D-2
Q510	E-4
RB101	H-1
RB102	H-2
RV1	T-4
RV2	T-5
RV3	R-4
RV4	Q-5
RV5	K-4
RV6	J-3
RV7	Q-5
RV8	Q-5
RV201	M-3
RV202	N-3
RV203	T-1
RV204	S-2
RV205	T-3
RV206	R-2
RV501	E-4
RV502	E-4
RV503	D-4
RV504	D-4
RV505	F-5
RV506	G-5
RV507	H-5
RV508	H-5
RV509	A-2
RV510	A-3
RV511	A-3
RV513	C-3
RV515	C-3
RV516	C-3
RV517	C-3
RV519	C-3

TP1	T-4
TP2	T-4
TP3	T-5
TP4	T-5
TP5	R-2
TP9	S-3
TP10	Q-4
TP12	R-4
TP13	Q-4
TP14	T-5
TP15	G-3
TP16	H-3
TP17	K-5
TP18	M-5
TP20	T-4
TP21	T-2
TP22	T-5
TP201	L-3
TP202	M-4
TP203	N-3
TP205	T-1
TP206	T-1
TP207	T-2
TP208	S-1
TP209	S-2
TP210	L-1
TP211	L-1
TP212	R-2
TP301	N-1
TP302	P-1
TP501	F-5
TP502	F-4
TP503	F-4
TP504	H-4
TP505	H-4
TP506	A-3
TP507	B-3
TP508	F-3
TP509	C-5
TP510	G-3
TP511	A-4
TP512	F-4
TP513	F-5
X1	R-5

SY-91 (SYSTEM CONTROL)

Ref. No.	Type	Pin No. GND	Pin No. +5V
IC 1	TC40H240P	10	20
IC 2	TC40H240P	10	20
IC 3	TC40H244P	10	20
IC 4	TC40H244P	10	20
IC 5	TC40H240P	10	20
IC 6	TC40H244P	10	20
IC 7	TC40H244P	10	20
IC 8	TC40H244P	10	20
IC 9	TC40H244P	10	20
IC 10	TC40H244P	10	20
IC 11	TC40H138P	8	16
IC 12	LH0080	29	11
IC 13	TC40H245P	10	20
IC 14	TC40H244P	10	20
IC 15	TC40H244P	10	20
IC 16	TC40H138P	8	16
IC 17	TC40H032P	7	14
IC 18	TC40H004P	7	14
IC 19	TC40H032P	7	14
IC 20	TC40H139P	8	16
IC 21	TC40H368P	8	16
IC 22	TC40208P	8	16
IC 23	TC40H074P	7	14
IC 24	TC40H368P	8	16
IC 25	TC40H273P	10	20
IC 26	TC40H273P	10	20
IC 27	TC40H273P	10	20
IC 28	TC40H273P	10	20
IC 29	TC40H273P	10	20
IC 30	TC40H273P	10	20
IC 31	TC40H273P	10	20
IC 32	TC40H273P	10	20
IC 33	TC40H138P	8	16
IC 34	TC40H244P	10	20
IC 35	TC40H138P	8	16
IC 36	MSM2128-1	12	24
IC 37			
IC 38			
IC 39	MBM2732-BW103	12	24
IC 40	MBM2732-BW102	12	24
IC 41	MBM2732-BW101	12	24
IC 42	LH0084	31	9
IC 43	LH0082	5	24
IC 44	LH0082	5	24
IC 45	TC40H011P	7	14
IC 46	TC4050BP	8	1
IC 47	TC4050BP	8	1
IC 48	M54529P	7	14
IC 49	SN74LS05N	7	14
IC 50	TC4021BP	8	16
IC 51	TC4021BP	8	16
IC 52	TC4021BP	8	16
IC 53	TC4021BP	8	16
IC 54	TC4050BP	8	1
IC 55	AM26LS31PC	8	16
IC 56	M54529P	7	14
IC 57	TC4011BP, MB84011B	7	14
IC 58	TC4071BP	7	14
IC 59	TC4081BP, MB84081B	7	14
IC 60			
IC 61	TC4081BP, MB84081B	7	14
IC 62	TC4069UBP, MB84069U	7	14
IC 63	HD14538BP	8	16
IC 64	TC4093BP	7	14
IC 65	MSM4094RS	8	16
IC 66	MSM4094RS	8	16
IC 67	MSM4094RS	8	16
IC 68	MSM4094RS	8	16
IC 69	μPD4584BC	7	14
IC 70	AM26LS32PC	8	16
IC 71	TC4001BP, MB84001B	7	14
IC 72	TC4081BP, MB84081B	7	14
IC 73	M54529P	7	14
IC 74	HD14538BP	8	16
IC 75	TC4081BP, MB84081B	7	14
IC 76	TC4050BP	8	1
IC 77	TC40H368P	8	16
IC 78	SN74LS37N	7	14
IC 79	M54529P	7	14
IC 80	TC4024BP	7	14

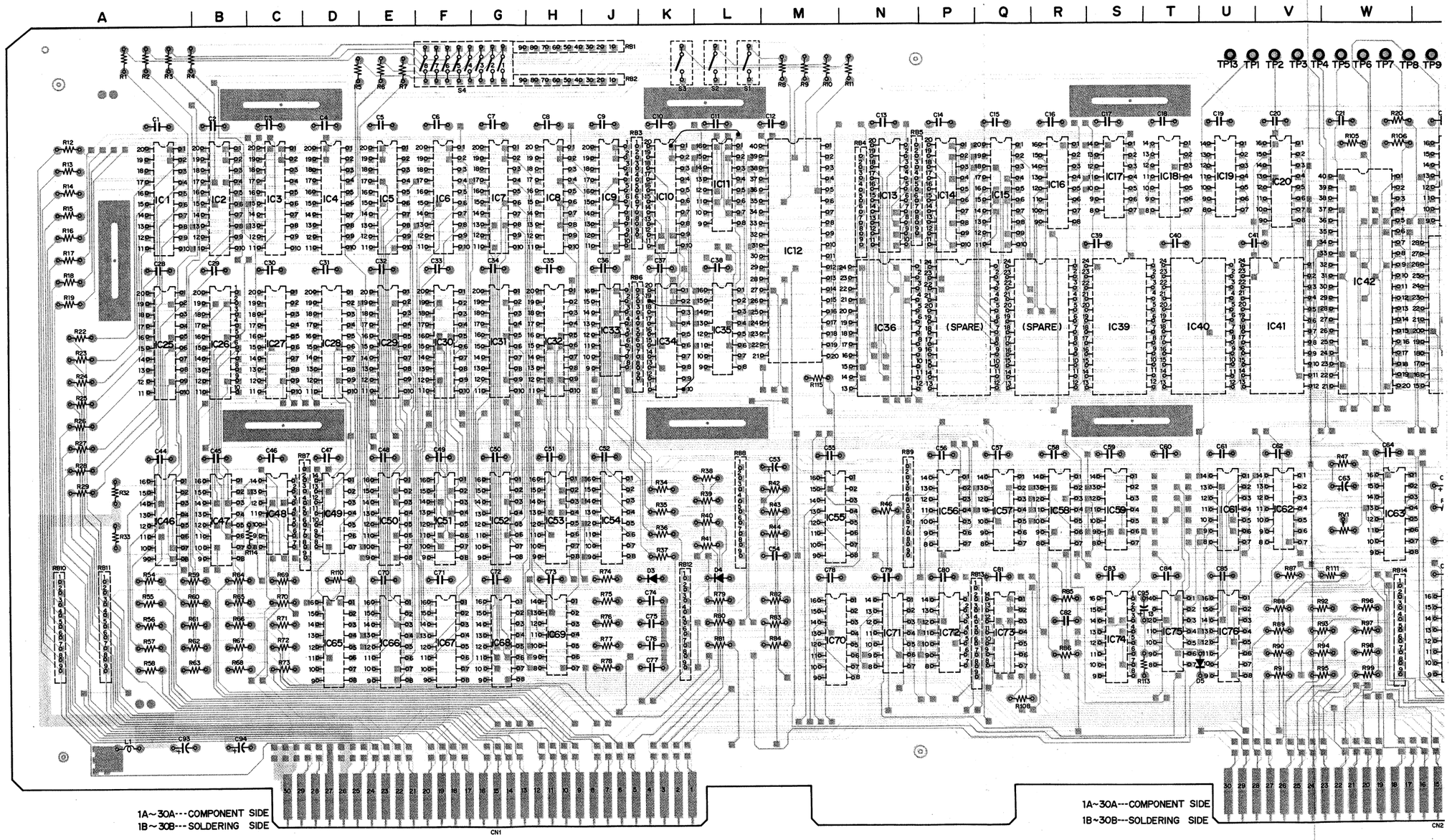

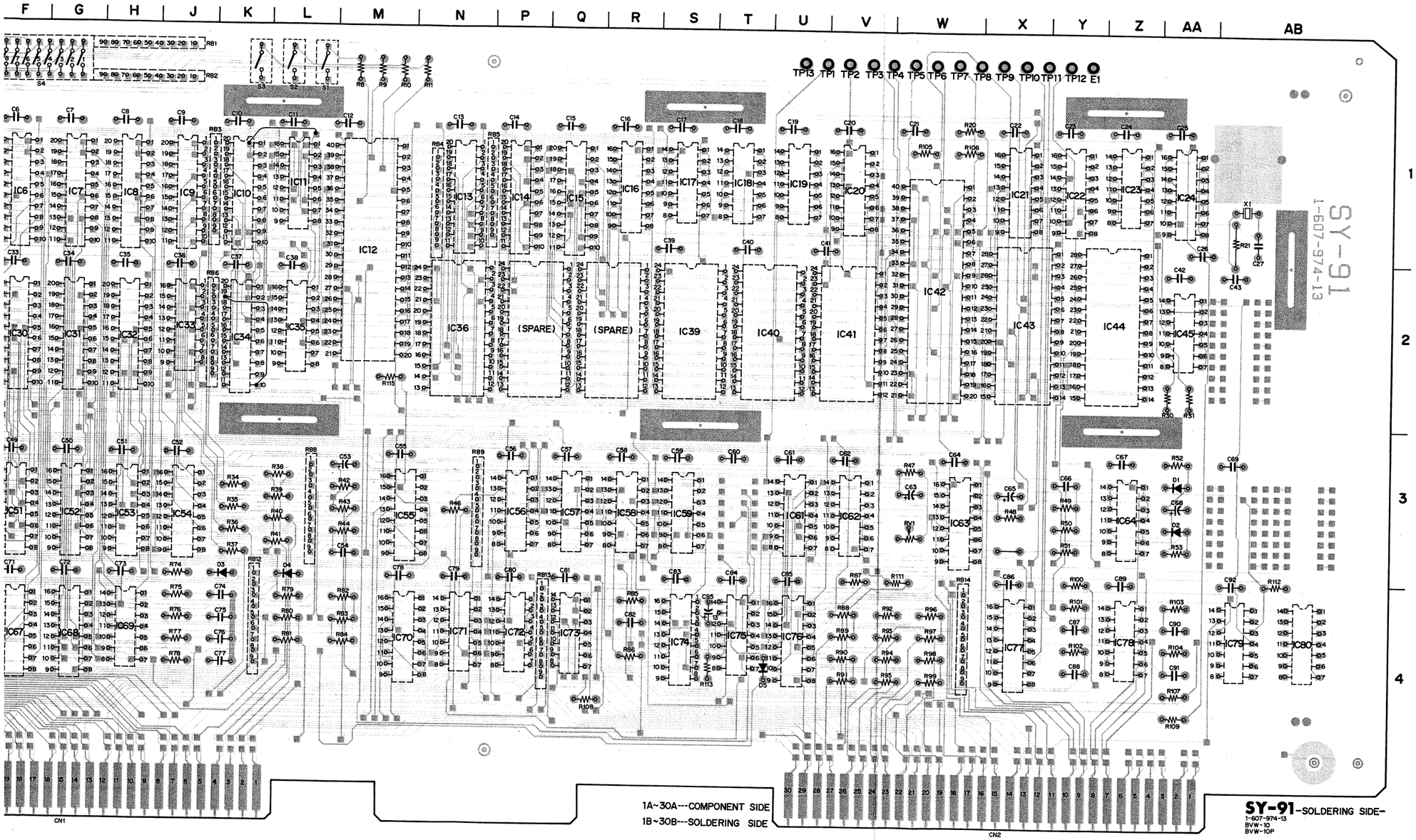

SY-91-SOLDERING SIDE-
1-607-974-13
BVW-10
BVW-10P

CN1	G - 4
CN2	X - 4
D1	AA - 3
D2	AA - 3
D3	K - 3
D4	L - 4
D5	C - 3
IC1	A - 1
IC2	B - 1
IC3	C - 1
IC4	D - 1
IC5	E - 1
IC6	F - 1
IC7	G - 1
IC8	H - 1
IC9	J - 1
IC10	K - 1
IC11	L - 1
IC12	M - 1
IC13	N - 1
IC14	P - 1
IC15	Q - 1
IC16	R - 1
IC17	S - 1
IC18	T - 1
IC19	U - 1
IC20	V - 1
IC21	X - 1
IC22	Y - 1
IC23	Z - 1
IC24	AA - 1
IC25	A - 2
IC26	B - 2
IC27	C - 2
IC28	D - 2
IC29	E - 2
IC30	F - 2
IC31	G - 2
IC32	H - 2
IC33	J - 2
IC34	K - 2
IC35	L - 2
IC36	N - 2
IC39	S - 2
IC40	U - 2
IC41	V - 2
IC42	W - 2
IC43	X - 2
IC44	Z - 2
IC45	AA - 2
IC46	A - 3
IC47	B - 3
IC48	C - 3
IC49	D - 3
IC50	E - 3
IC51	F - 3
IC52	G - 3
IC53	H - 3
IC54	J - 3
IC55	N - 3
IC56	P - 3
IC57	Q - 3
IC58	R - 3
IC59	S - 3
IC61	U - 3
IC62	V - 3
IC63	W - 3
IC64	Z - 3
IC65	D - 4
IC66	E - 4
IC67	F - 4
IC68	G - 4
IC69	H - 4
IC70	M - 4
IC71	N - 4
IC72	P - 4
IC73	Q - 4
IC74	S - 4
IC75	T - 4
IC76	U - 4
IC77	X - 4
IC78	Z - 4
IC79	AB - 4
IC80	AB - 4
RB1	H - 1
RB2	H - 1
RB3	K - 1
RB4	N - 1
RB5	P - 1
RB6	K - 2
RB7	D - 3
RB8	L - 3
RB9	N - 3
RB10	A - 4
RB11	A - 4
RB12	K - 4
RB13	P - 4
RB14	W - 4
S1	L - 1
S2	L - 1
S3	K - 1
S4	F - 1
RV1	W - 3
TP1	V - 1
TP2	V - 1
TP3	V - 1
TP4	W - 1
TP5	W - 1
TP6	W - 1
TP7	W - 1
TP8	W - 1
TP9	X - 1
TP10	X - 1
TP11	X - 1
TP12	Y - 1
TP13	U - 1
TPE	Y - 1
X1	AB - 1

(3) (SYSTEM CONTROL)

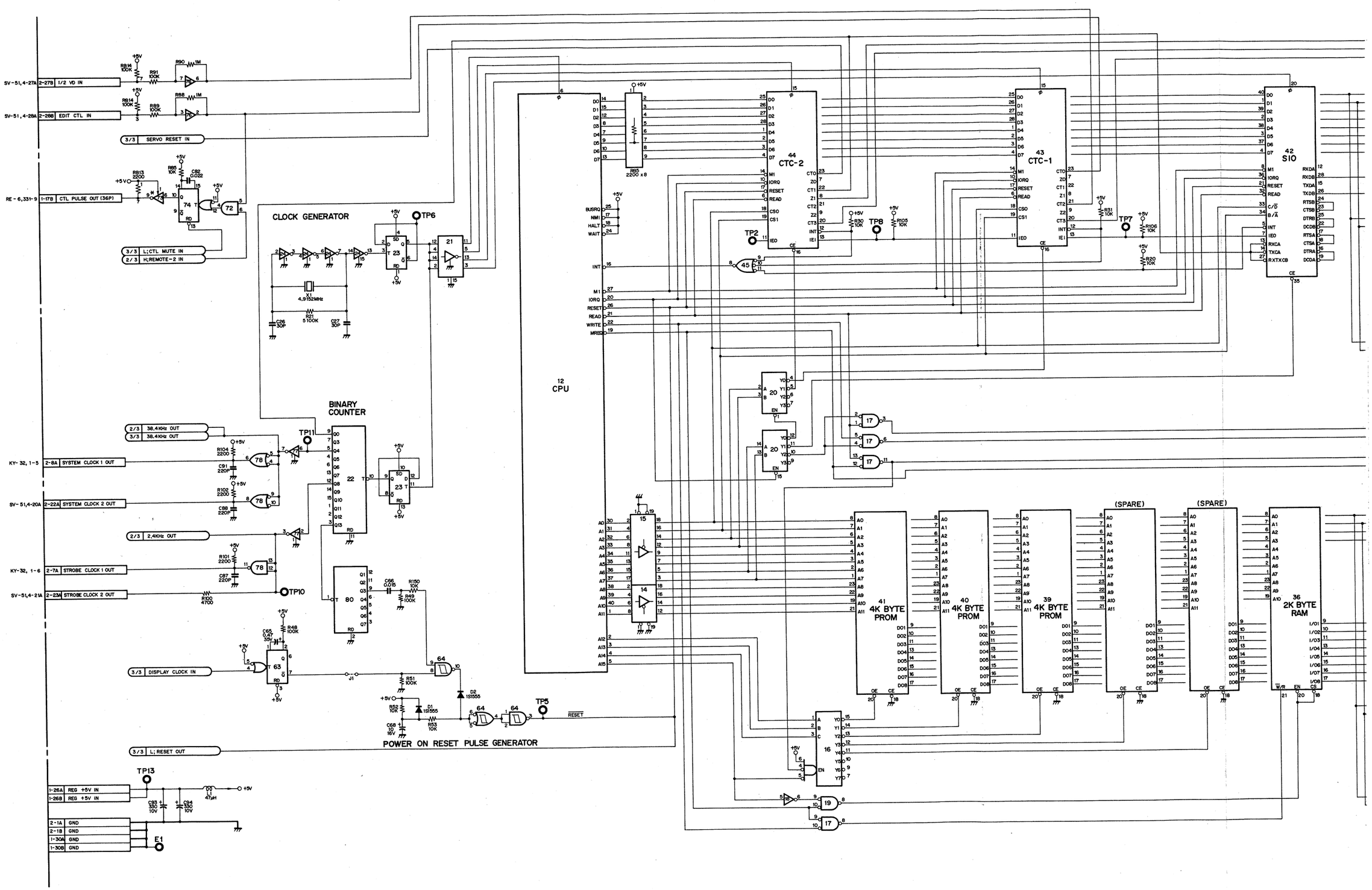

SY-91 (1/3)

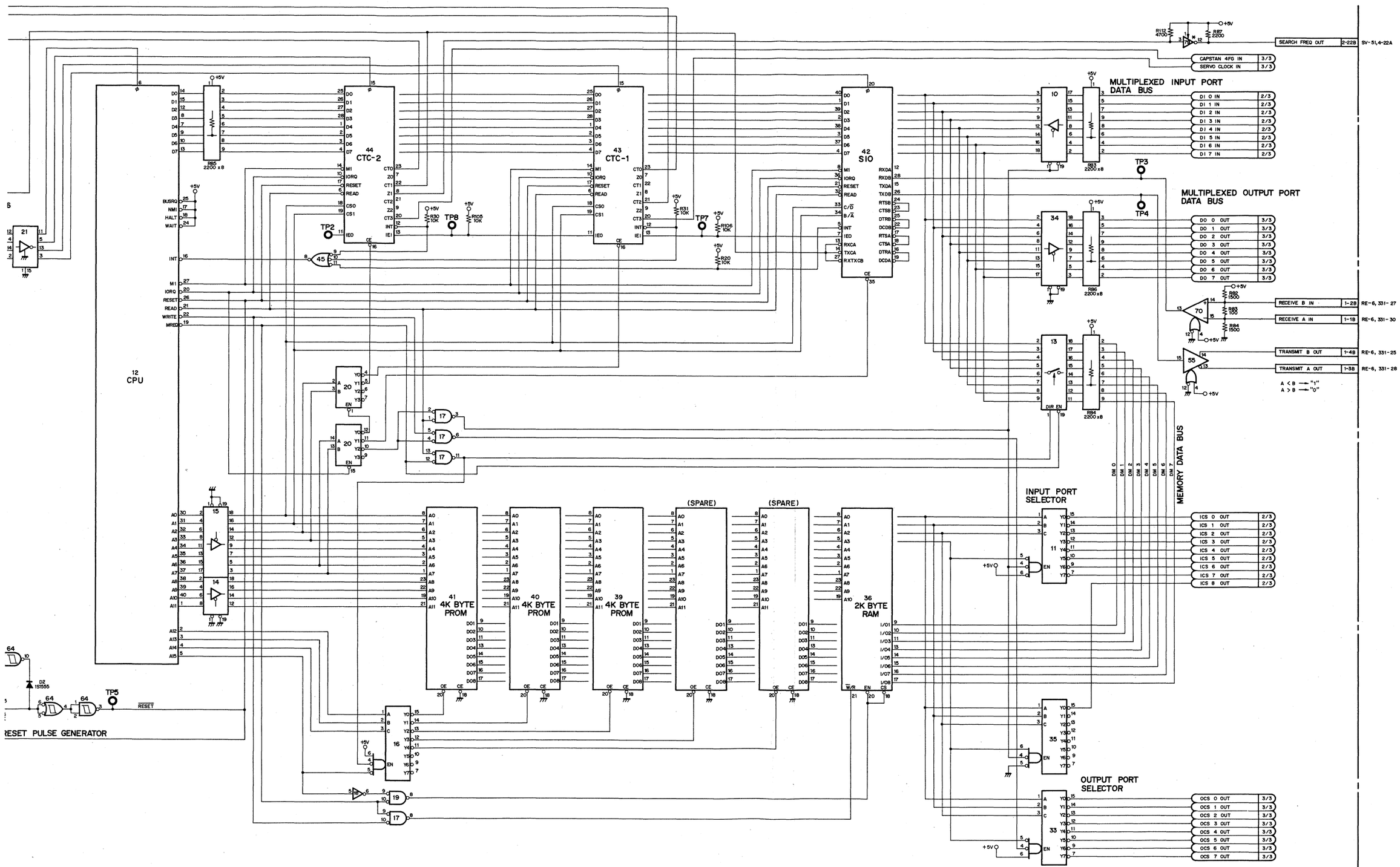

SY-91 (1/3)

1-607-974-11,12,13
BVW-10
BVW-10P

SY-91 (SYSTEM CONTROL)

Ref. No.	Type	Pin No. GND	Pin No. +5V
IC 1	TC40H240P	10	20
IC 2	TC40H240P	10	20
IC 3	TC40H244P	10	20
IC 4	TC40H244P	10	20
IC 5	TC40H240P	10	20
IC 6	TC40H244P	10	20
IC 7	TC40H244P	10	20
IC 8	TC40H244P	10	20
IC 9	TC40H244P	10	20
IC 10	TC40H244P	10	20
IC 11	TC40H138P	8	16
IC 12	LH0080	29	11
IC 13	TC40H245P	10	20
IC 14	TC40H244P	10	20
IC 15	TC40H244P	10	20
IC 16	TC40H138P	8	16
IC 17	TC40H032P	7	14
IC 18	TC40H004P	7	14
IC 19	TC40H032P	7	14
IC 20	TC40H139P	8	16
IC 21	TC40H368P	8	16
IC 22	TC4020BP	8	16
IC 23	TC40H074P	7	14
IC 24	TC40H368P	8	16
IC 25	TC40H273P	10	20
IC 26	TC40H273P	10	20
IC 27	TC40H273P	10	20
IC 28	TC40H273P	10	20
IC 29	TC40H273P	10	20
IC 30	TC40H273P	10	20
IC 31	TC40H273P	10	20
IC 32	TC40H273P	10	20
IC 33	TC40H138P	8	16
IC 34	TC40H244P	10	20
IC 35	TC40H138P	8	16
IC 36	MSM2128-1	12	24
IC 37			
IC 38			
IC 39	MBM2732-BW103	12	24
IC 40	MBM2732-BW102	12	24
IC 41	MBM2732-BW101	12	24
IC 42	LH0084	31	9
IC 43	LH0082	5	24
IC 44	LH0082	5	24
IC 45	TC40H011P	7	14
IC 46	TC4050BP	8	1
IC 47	TC4050BP	8	1
IC 48	M54529P	7	14
IC 49	SN74LS05N	7	14
IC 50	TC4021BP	8	16
IC 51	TC4021BP	8	16
IC 52	TC4021BP	8	16
IC 53	TC4021BP	8	16
IC 54	TC4050BP	8	1
IC 55	AM26LS31PC	8	16
IC 56	M54529P	7	14
IC 57	TC4011BP, MB84011B	7	14
IC 58	TC4071BP	7	14
IC 59	TC4081BP, MB84081B	7	14
IC 60			
IC 61	TC4081BP, MB84081B	7	14
IC 62	TC4069UBP, MB84069U	7	14
IC 63	HD14538BP	8	16
IC 64	TC4093BP	7	14
IC 65	MSM4094RS	8	16
IC 66	MSM4094RS	8	16
IC 67	MSM4094RS	8	16
IC 68	MSM4094RS	8	16
IC 69	μPD4584BC	7	14
IC 70	AM26LS32PC	8	16
IC 71	TC4001BP, MB84001B	7	14
IC 72	TC4081BP, MB84081B	7	14
IC 73	M54529P	7	14
IC 74	HD14538BP	8	16
IC 75	TC4081BP, MB84081B	7	14
IC 76	TC4050BP	8	1
IC 77	TC40H368P	8	16
IC 78	SN74LS37N	7	14
IC 79	M54529P	7	14
IC 80	TC4024BP	7	14

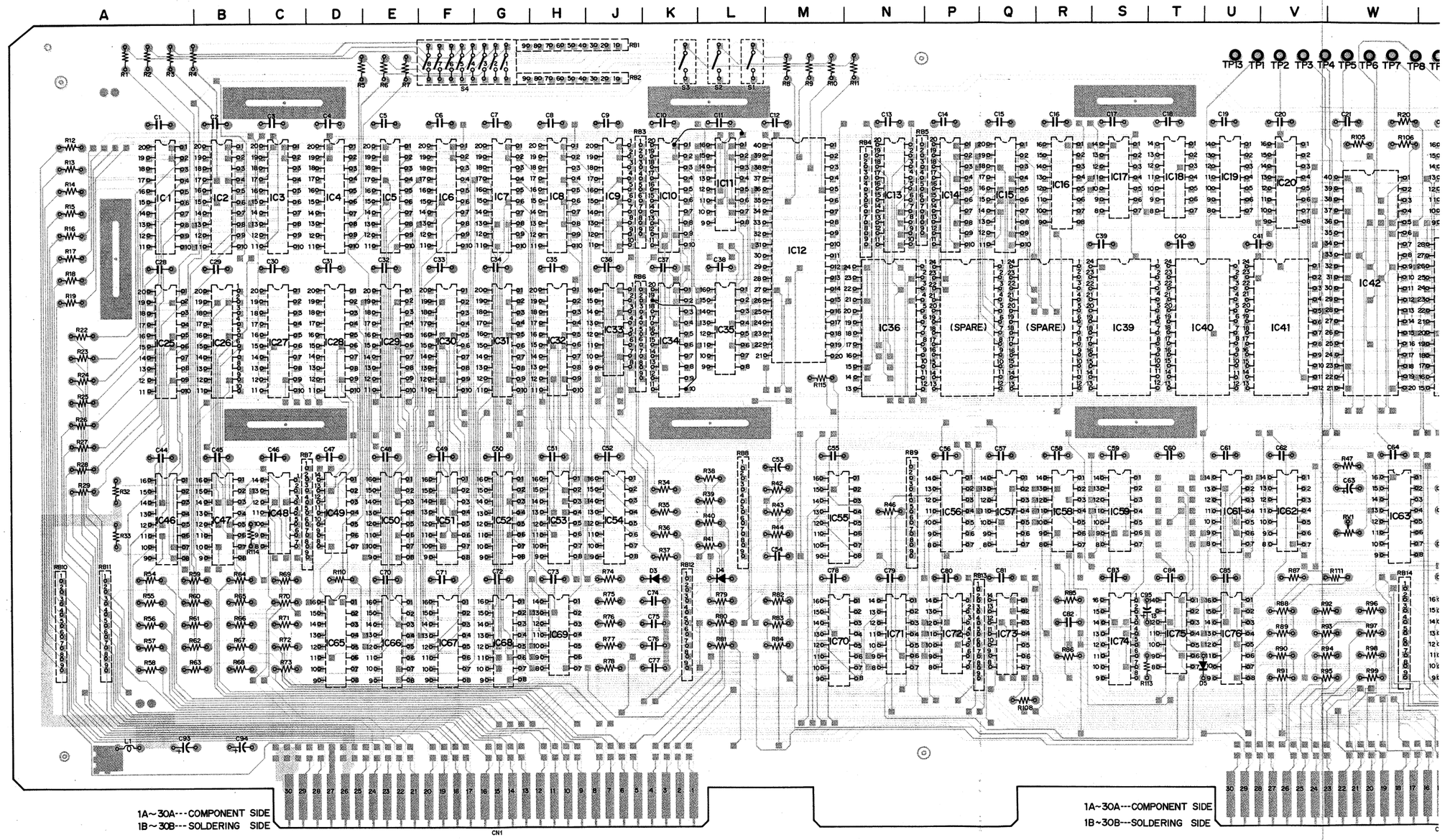

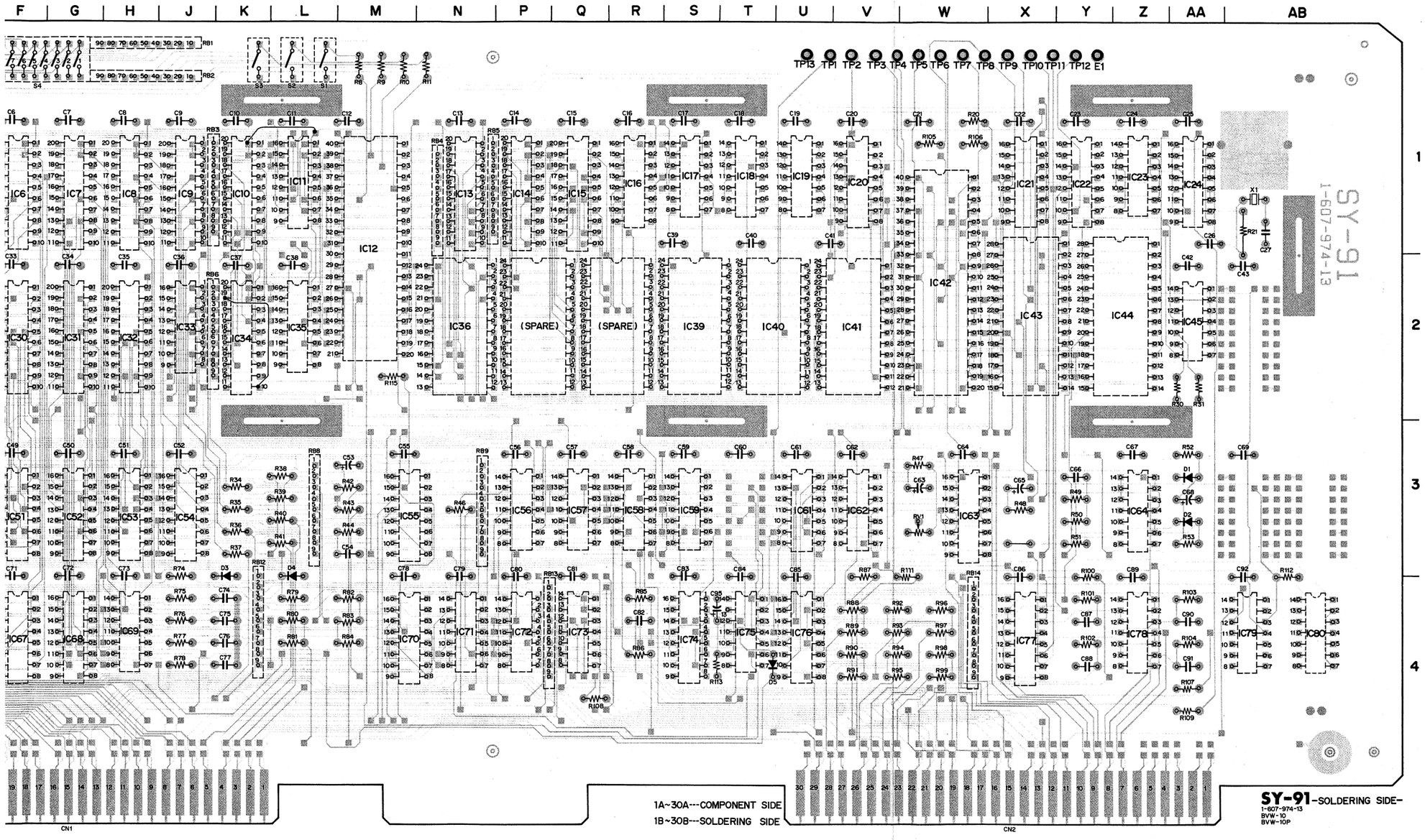

SY-91-SOLDERING SIDE-
1-607-974-13
BVW-10
BVW-10P

CN1	G-4	IC71	N-4
CN2	X-4	IC72	P-4
		IC73	Q-4
D1	AA-3	IC74	S-4
D2	AA-3	IC75	T-4
D3	K-3	IC76	U-4
D4	L-4	IC77	X-4
D5	C-3	IC78	Z-4
		IC79	AB-4
IC1	A-1	IC80	AB-4
IC2	B-1		
IC3	C-1	RB1	H-1
IC4	D-1	RB2	H-1
IC5	E-1	RB3	K-1
IC6	F-1	RB4	N-1
IC7	G-1	RB5	P-1
IC8	H-1	RB6	K-2
IC9	J-1	RB7	D-3
IC10	K-1	RB8	L-3
IC11	L-1	RB9	N-3
IC12	M-1	RB10	A-4
IC13	N-1	RB11	A-4
IC14	P-1	RB12	K-4
IC15	Q-1	RB13	P-4
IC16	R-1	RB14	W-4
IC17	S-1		
IC18	T-1	S1	L-1
IC19	U-1	S2	L-1
IC20	V-1	S3	K-1
IC21	X-1	S4	F-1
IC22	Y-1		
IC23	Z-1	RV1	W-3
IC24	AA-1		
IC25	A-2	TP1	V-1
IC26	B-2	TP2	V-1
IC27	C-2	TP3	V-1
IC28	D-2	TP4	W-1
IC29	E-2	TP5	W-1
IC30	F-2	TP6	W-1
IC31	G-2	TP7	W-1
IC32	H-2	TP8	W-1
IC33	J-2	TP9	X-1
IC34	K-2	TP10	X-1
IC35	L-2	TP11	X-1
IC36	N-2	TP12	Y-1
IC39	S-2	TP13	U-1
IC40	U-2	TPE	Y-1
IC41	V-2		
IC42	W-2	X1	AB-1
IC43	X-2		
IC44	Z-2		
IC45	AA-2		
IC46	A-3		
IC47	B-3		
IC48	C-3		
IC49	D-3		
IC50	E-3		
IC51	F-3		
IC52	G-3		
IC53	H-3		
IC54	J-3		
IC55	N-3		
IC56	P-3		
IC57	Q-3		
IC58	R-3		
IC59	S-3		
IC61	U-3		
IC62	V-3		
IC63	W-3		
IC64	Z-3		
IC65	D-4		
IC66	E-4		
IC67	F-4		
IC68	G-4		
IC69	H-4		
IC70	M-4		

/3) (SYSTEM CONTROL)

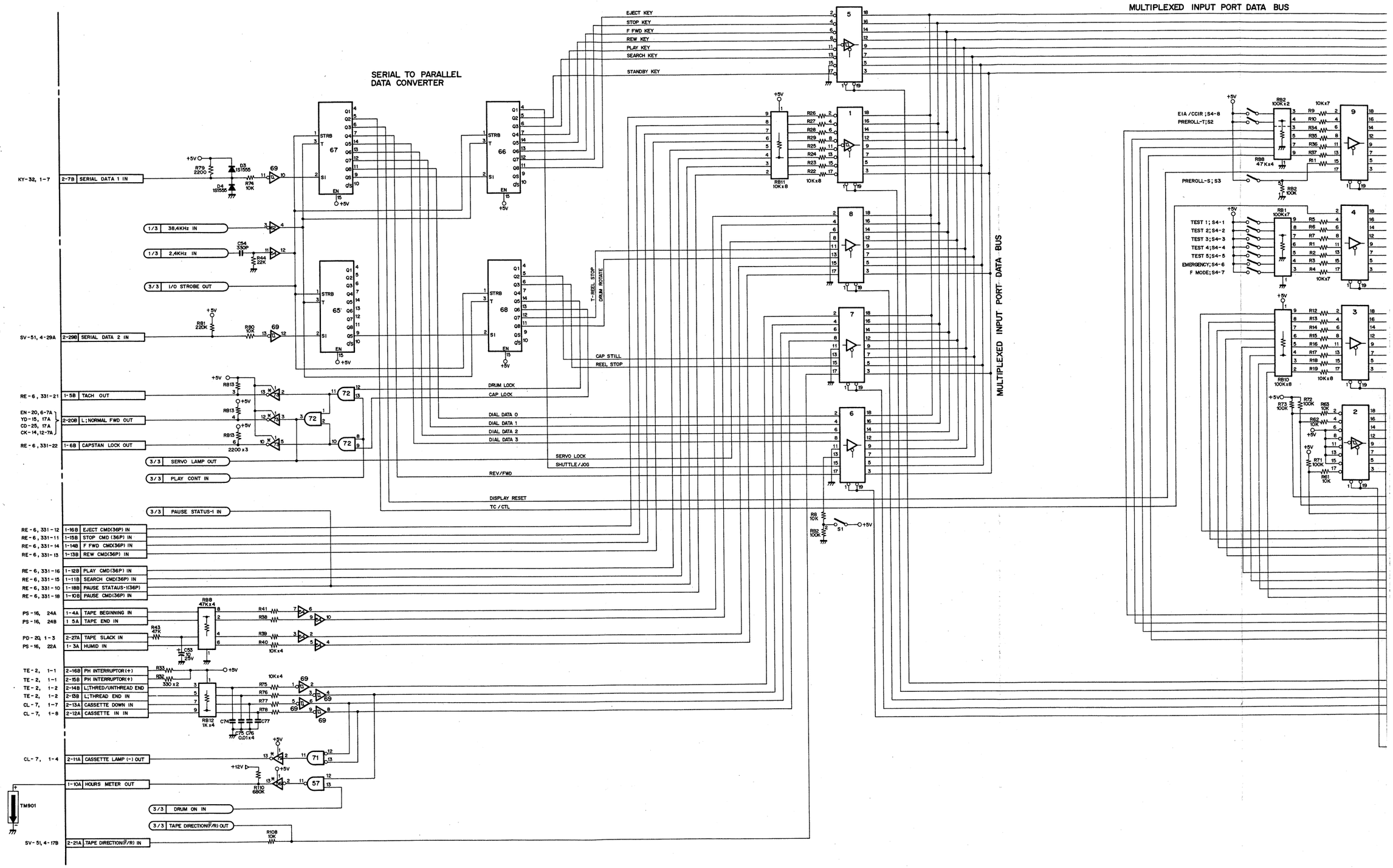

SY-91 (2/3)

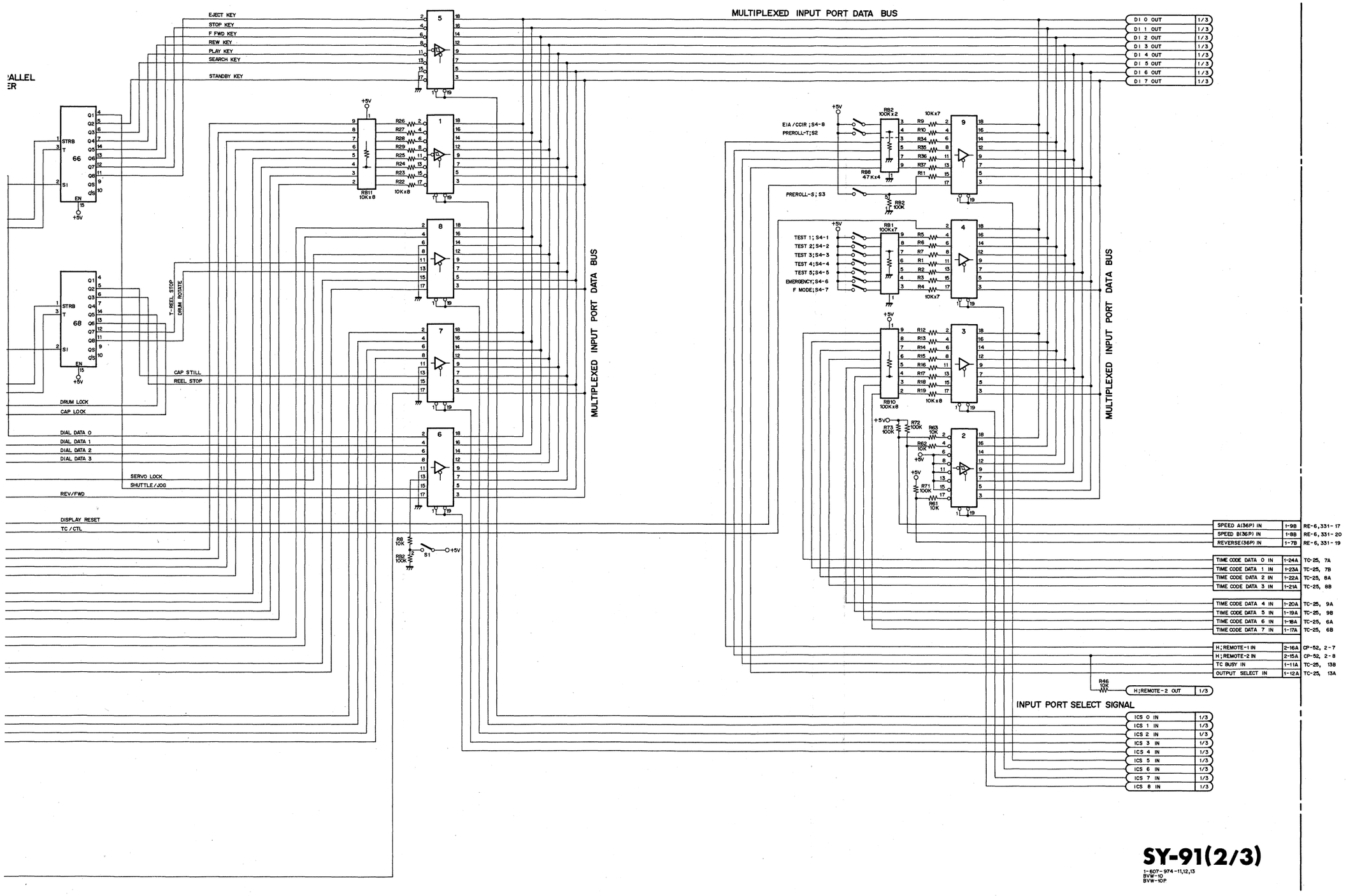
MULTIPLEXED INPUT PORT DATA BUS
EJECT KEY
STOP KEY
F FWD KEY
REW KEY
PLAY KEY
SEARCH KEY
STANDBY KEY
T-REEL STOP
DRUM ROTATE
CAP STILL
REEL STOP
DRUM LOCK
CAP LOCK
DIAL DATA 0
DIAL DATA 1
DIAL DATA 2
DIAL DATA 3
SERVO LOCK
SHUTTLE/JOG
REV/FWD
DISPLAY RESET
TC/CTL
EIA/CCIR;S4-8
PREROLL-T;S2
PREROLL-S;S3
TEST 1;S4-1
TEST 2;S4-2
TEST 3;S4-3
TEST 4;S4-4
TEST 5;S4-5
EMERGENCY;S4-6
F MODE;S4-7
DI 0 OUT 1/3
DI 1 OUT 1/3
DI 2 OUT 1/3
DI 3 OUT 1/3
DI 4 OUT 1/3
DI 5 OUT 1/3
DI 6 OUT 1/3
DI 7 OUT 1/3
SPEED A(36P) IN 1-9B RE-6,331-17
SPEED B(36P) IN 1-8B RE-6,331-20
REVERSE(36P) IN 1-7B RE-6,331-19
TIME CODE DATA 0 IN 1-24A TC-25, 7A
TIME CODE DATA 1 IN 1-23A TC-25, 7B
TIME CODE DATA 2 IN 1-22A TC-25, 8A
TIME CODE DATA 3 IN 1-21A TC-25, 8B
TIME CODE DATA 4 IN 1-20A TC-25, 9A
TIME CODE DATA 5 IN 1-19A TC-25, 9B
TIME CODE DATA 6 IN 1-18A TC-25, 6A
TIME CODE DATA 7 IN 1-17A TC-25, 6B
H;REMOTE-1 IN 2-16A CP-52, 2-7
H;REMOTE-2 IN 2-15A CP-52, 2-8
TC BUSY IN 1-11A TC-25, 13B
OUTPUT SELECT IN 1-12A TC-25, 13A
H;REMOTE-2 OUT 1/3
INPUT PORT SELECT SIGNAL
ICS 0 IN 1/3
ICS 1 IN 1/3
ICS 2 IN 1/3
ICS 3 IN 1/3
ICS 4 IN 1/3
ICS 5 IN 1/3
ICS 6 IN 1/3
ICS 7 IN 1/3
ICS 8 IN 1/3
SY-91(2/3)
1-607-974-11,12,13
BVW-10
BVW-10P

SY-91 SY-91

SY-91 (SYSTEM CONTROL)

Ref. No.	Type	Pin No. GND	Pin No. +5V
IC 1	TC40H240P	10	20
IC 2	TC40H240P	10	20
IC 3	TC40H244P	10	20
IC 4	TC40H244P	10	20
IC 5	TC40H240P	10	20
IC 6	TC40H244P	10	20
IC 7	TC40H244P	10	20
IC 8	TC40H244P	10	20
IC 9	TC40H244P	10	20
IC 10	TC40H244P	10	20
IC 11	TC40H138P	8	16
IC 12	LH0080	29	11
IC 13	TC40H245P	10	20
IC 14	TC40H244P	10	20
IC 15	TC40H244P	10	20
IC 16	TC40H138P	8	16
IC 17	TC40H032P	7	14
IC 18	TC40H004P	7	14
IC 19	TC40H032P	7	14
IC 20	TC40H139P	8	16
IC 21	TC40H368P	8	16
IC 22	TC4020BP	8	16
IC 23	TC40H074P	7	14
IC 24	TC40H368P	8	16
IC 25	TC40H273P	10	20
IC 26	TC40H273P	10	20
IC 27	TC40H273P	10	20
IC 28	TC40H273P	10	20
IC 29	TC40H273P	10	20
IC 30	TC40H273P	10	20
IC 31	TC40H273P	10	20
IC 32	TC40H273P	10	20
IC 33	TC40H138P	8	16
IC 34	TC40H244P	10	20
IC 35	TC40H138P	8	16
IC 36	MSM2128-1	12	24
IC 37			
IC 38			
IC 39	MBM2732-BW103	12	24
IC 40	MBM2732-BW102	12	24
IC 41	MBM2732-BW101	12	24
IC 42	LH0084	31	9
IC 43	LH0082	5	24
IC 44	LH0082	5	24
IC 45	TC40H011P	7	14
IC 46	TC4050BP	8	1
IC 47	TC4050BP	8	1
IC 48	M54529P	7	14
IC 49	SN74LS05N	7	14
IC 50	TC4021BP	8	16
IC 51	TC4021BP	8	16
IC 52	TC4021BP	8	16
IC 53	TC4021BP	8	16
IC 54	TC4050BP	8	1
IC 55	AM26LS31PC	8	16
IC 56	M54529P	7	14
IC 57	TC4011BP, MB84011B	7	14
IC 58	TC4071BP	7	14
IC 59	TC4081BP, MB84081B	7	14
IC 60			
IC 61	TC4081BP, MB84081B	7	14
IC 62	TC4069UBP, MB84069U	7	14
IC 63	HD14538BP	8	16
IC 64	TC4093BP	7	14
IC 65	MSM4094RS	8	16
IC 66	MSM4094RS	8	16
IC 67	MSM4094RS	8	16
IC 68	MSM4094RS	8	16
IC 69	μPD4584BC	7	14
IC 70	AM26LS32PC	8	16
IC 71	TC4001BP, MB84001B	7	14
IC 72	TC4081BP, MB84081B	7	14
IC 73	M54529P	7	14
IC 74	HD14538BP	8	16
IC 75	TC4081BP, MB84081B	7	14
IC 76	TC4050BP	8	1
IC 77	TC40H368P	8	16
IC 78	SN74LS37N	7	14
IC 79	M54529P	7	14
IC 80	TC4024BP	7	14

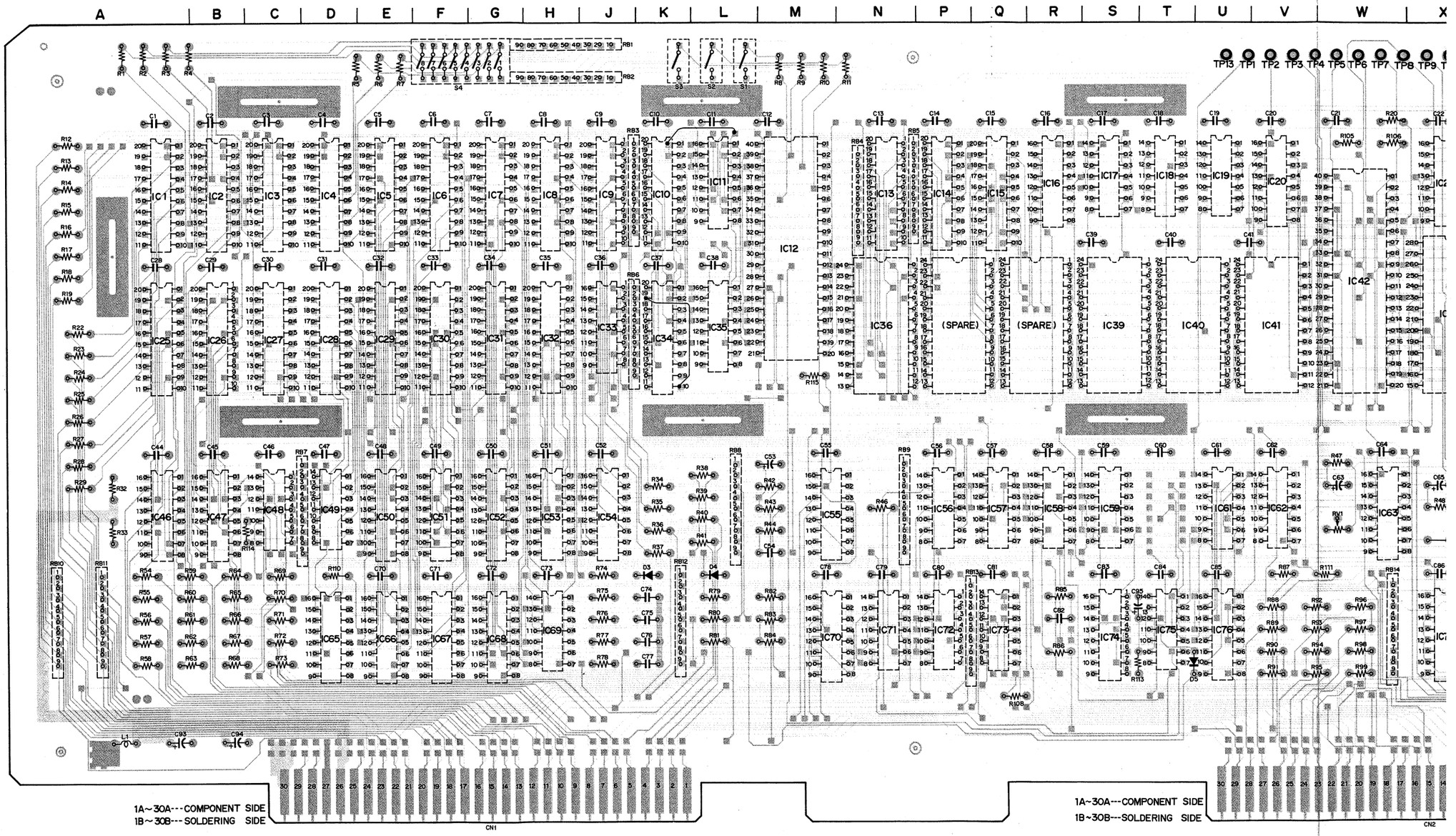

1A~30A---COMPONENT SIDE
1B~30B---SOLDERING SIDE

1A~30A---COMPONENT SIDE
1B~30B---SOLDERING SIDE

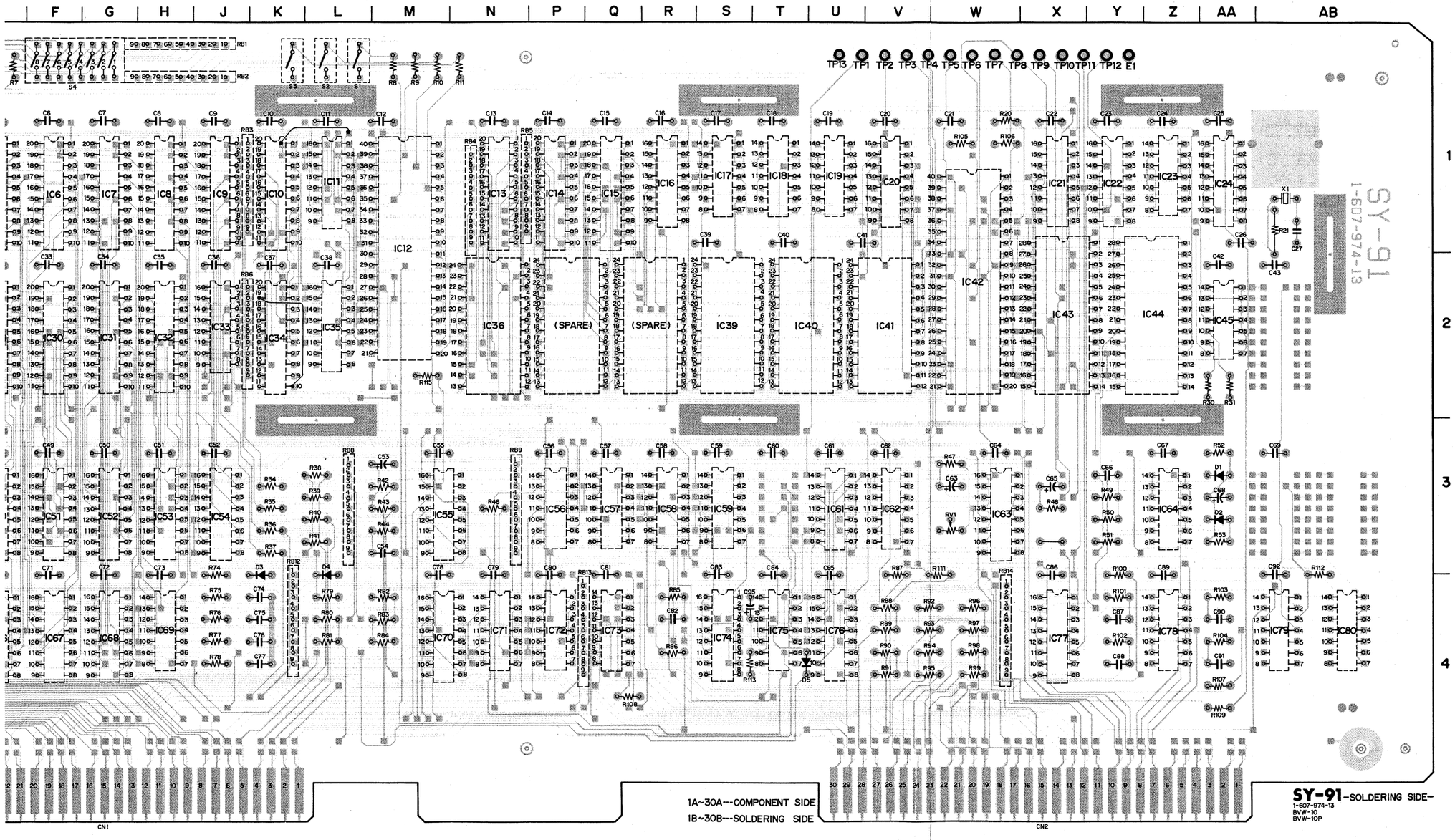

CN1	G - 4	IC71	N - 4
CN2	X - 4	IC72	P - 4
		IC73	Q - 4
D1	AA - 3	IC74	S - 4
D2	AA - 3	IC75	T - 4
D3	K - 3	IC76	U - 4
D4	L - 4	IC77	X - 4
D5	C - 3	IC78	Z - 4
		IC79	AB - 4
IC1	A - 1	IC80	AB - 4
IC2	B - 1		
IC3	C - 1	RB1	H - 1
IC4	D - 1	RB2	H - 1
IC5	E - 1	RB3	K - 1
IC6	F - 1	RB4	N - 1
IC7	G - 1	RB5	P - 1
IC8	H - 1	RB6	K - 2
IC9	J - 1	RB7	D - 3
IC10	K - 1	RB8	L - 3
IC11	L - 1	RB9	N - 3
IC12	M - 1	RB10	A - 4
IC13	N - 1	RB11	A - 4
IC14	P - 1	RB12	K - 4
IC15	Q - 1	RB13	P - 4
IC16	R - 1	RB14	W - 4
IC17	S - 1		
IC18	T - 1	S1	L - 1
IC19	U - 1	S2	L - 1
IC20	V - 1	S3	K - 1
IC21	X - 1	S4	F - 1
IC22	Y - 1		
IC23	Z - 1	RV1	W - 3
IC24	AA - 1		
IC25	A - 2	TP1	V - 1
IC26	B - 2	TP2	V - 1
IC27	C - 2	TP3	V - 1
IC28	D - 2	TP4	W - 1
IC29	E - 2	TP5	W - 1
IC30	F - 2	TP6	W - 1
IC31	G - 2	TP7	W - 1
IC32	H - 2	TP8	W - 1
IC33	J - 2	TP9	X - 1
IC34	K - 2	TP10	X - 1
IC35	L - 2	TP11	X - 1
IC36	N - 2	TP12	Y - 1
IC39	S - 2	TP13	U - 1
IC40	U - 2	TPE	Y - 1
IC41	V - 2		
IC42	W - 2	X1	AB - 1
IC43	X - 2		
IC44	Z - 2		
IC45	AA - 2		
IC46	A - 3		
IC47	B - 3		
IC48	C - 3		
IC49	D - 3		
IC50	E - 3		
IC51	F - 3		
IC52	G - 3		
IC53	H - 3		
IC54	J - 3		
IC55	N - 3		
IC56	P - 3		
IC57	Q - 3		
IC58	R - 3		
IC59	S - 3		
IC61	U - 3		
IC62	V - 3		
IC63	W - 3		
IC64	Z - 3		
IC65	D - 4		
IC66	E - 4		
IC67	F - 4		
IC68	G - 4		
IC69	H - 4		
IC70	M - 4		

SY-91 (3/3) (SYSTEM CONTROL)

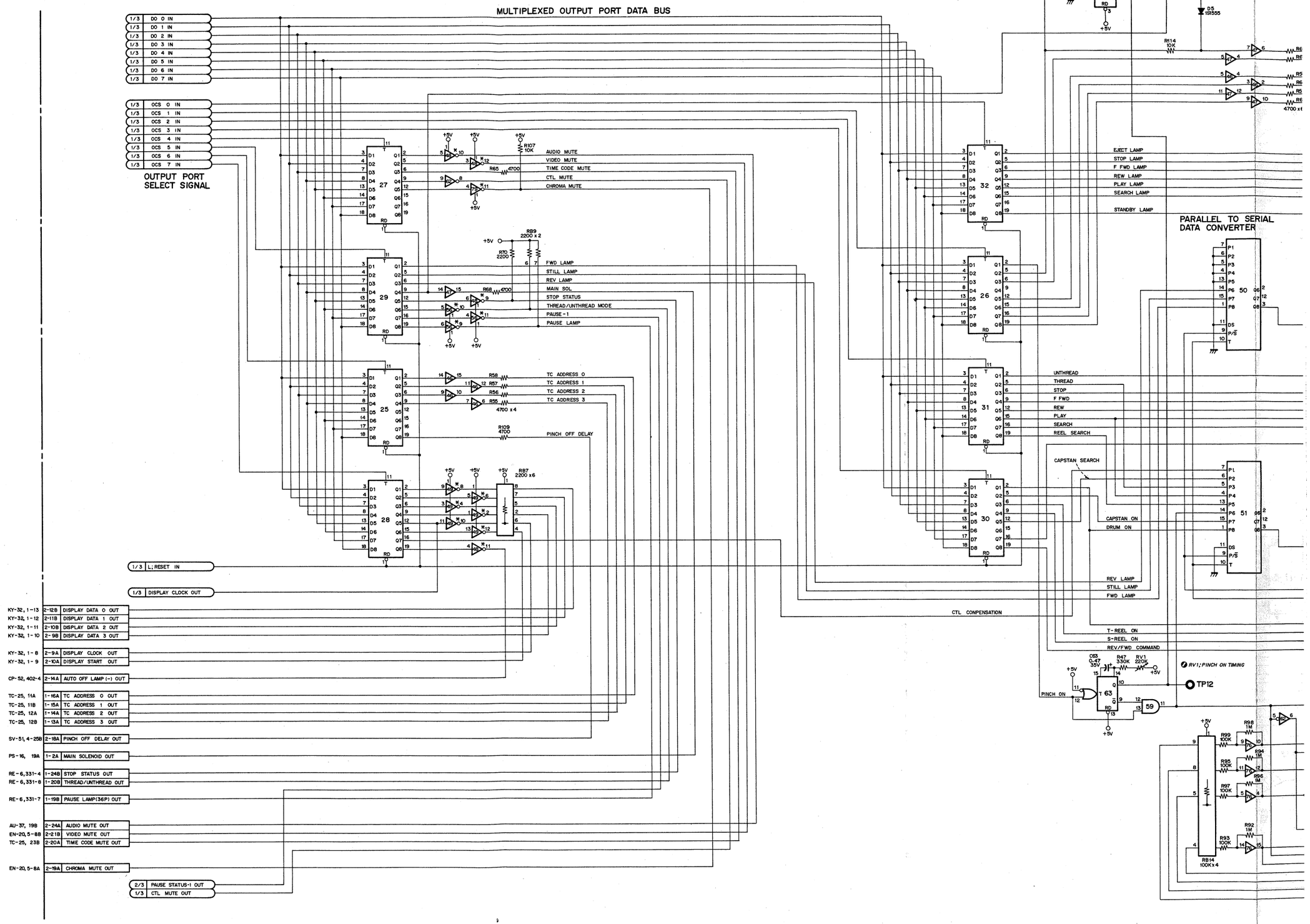

SY-91 (3/3)

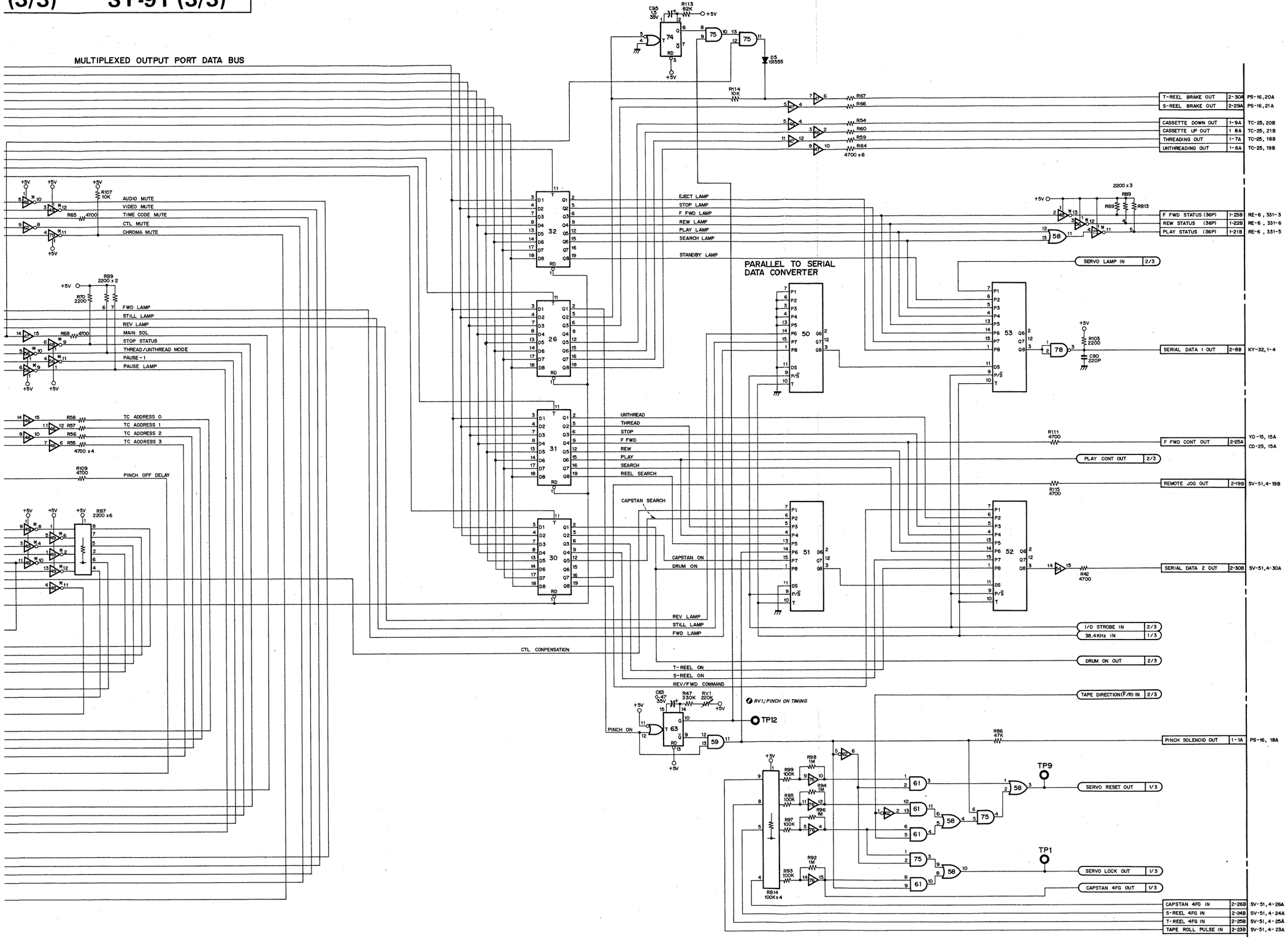

SY-91(3/3)

1-607-974-11,12,13
BVW-10
BVW-10P

TC-25 (TIME CODE READER) (MOTOR DRIVER)

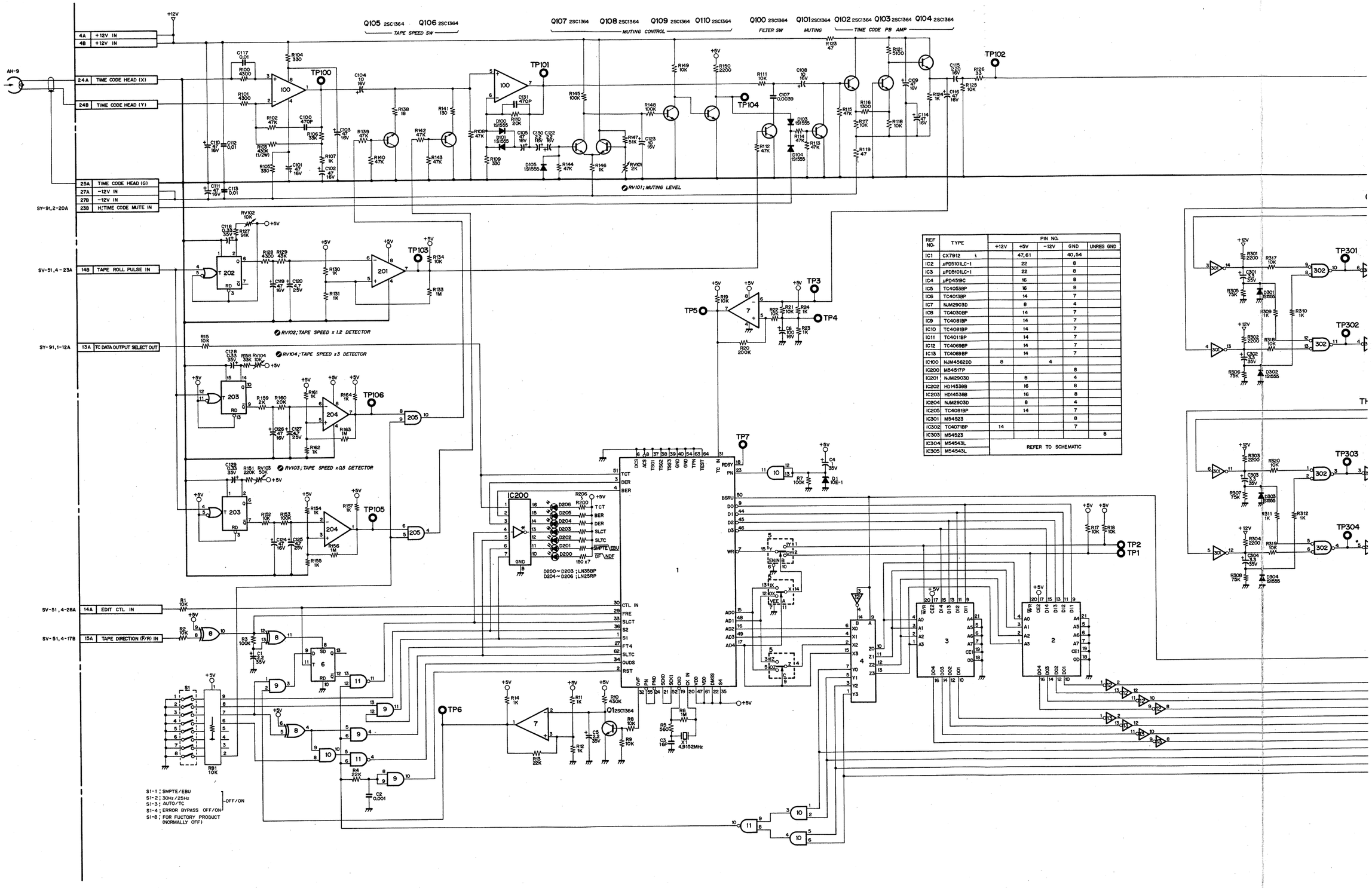

REF NO.	TYPE	PIN NO.				
		+12V	+5V	−12V	GND	UNREG GND
IC1	CX7912		47,61		40,54	
IC2	μPD5101LC-1		22		8	
IC3	μPD5101LC-1		22		8	
IC4	μPD4519C		16		8	
IC5	TC4053BP		16		8	
IC6	TC4013BP		14		7	
IC7	NJM2903D		8		4	
IC8	TC4030BP		14		7	
IC9	TC4081BP		14		7	
IC10	TC4081BP		14		7	
IC11	TC4011BP		14		7	
IC12	TC4069BP		14		7	
IC13	TC4069BP		14		7	
IC100	NJM4562DD	8		4		
IC200	M54517P				8	
IC201	NJM2903D		8		4	
IC202	HD14538B		16		8	
IC203	HD14538B		16		8	
IC204	NJM2903D		8		4	
IC205	TC4081BP		14		7	
IC301	M54523				8	
IC302	TC4071BP	14			7	
IC303	M54523					8
IC304	M54543L	REFER TO SCHEMATIC				
IC305	M54543L					

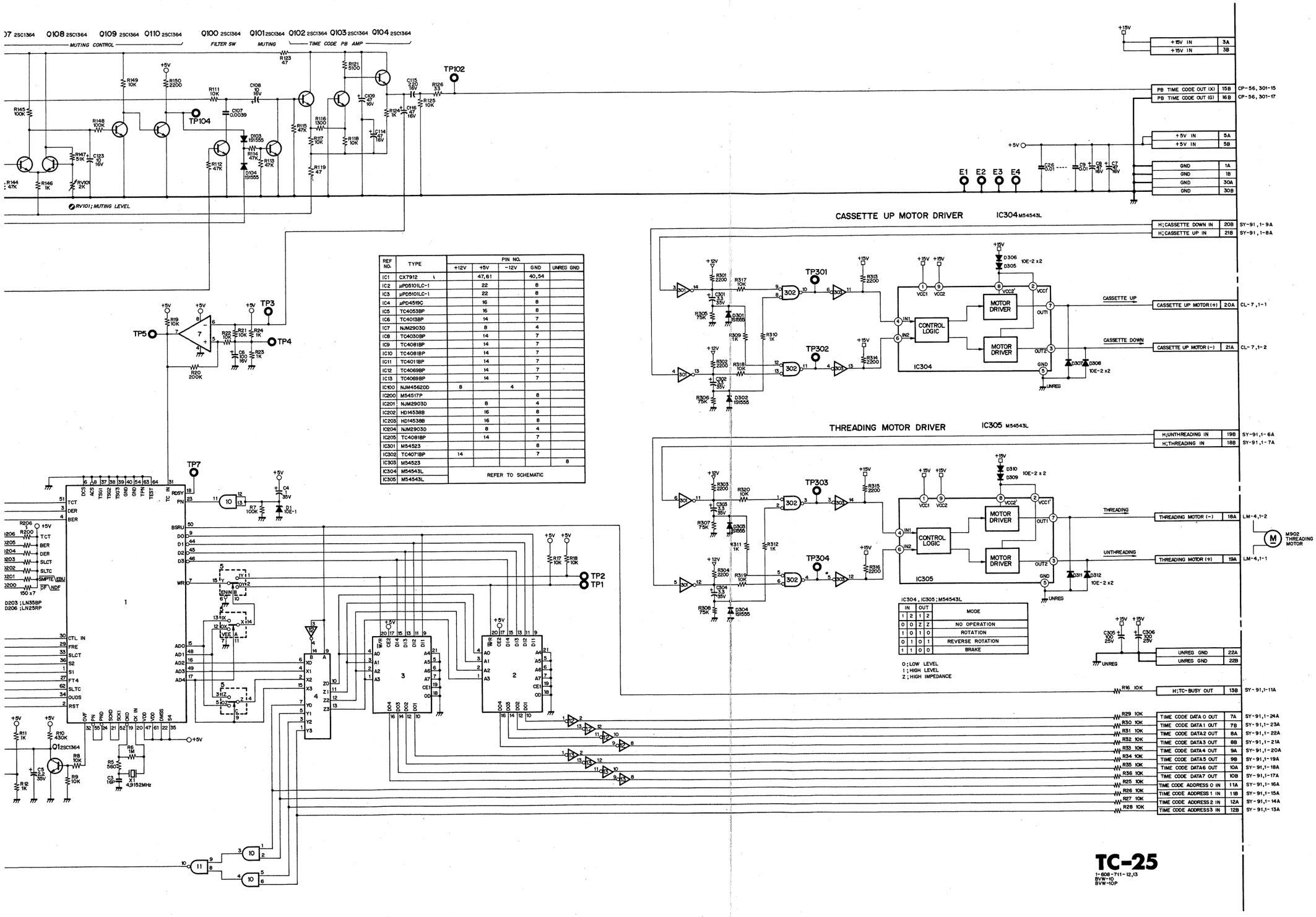

REF NO.	TYPE	PIN NO.				
		+12V	+5V	-12V	GND	UNREG GND
IC1	CX7912		47,61		40,54	
IC2	μPD5101LC-1		22		8	
IC3	μPD5101LC-1		22		8	
IC4	μPD4519C		16		8	
IC5	TC4053BP		16		8	
IC6	TC4013BP		14		7	
IC7	NJM2903D		8		4	
IC8	TC4030BP		14		7	
IC9	TC4081BP		14		7	
IC10	TC4081BP		14		7	
IC11	TC4011BP		14		7	
IC12	TC4069BP		14		7	
IC13	TC4069BP		14		7	
IC100	NJM4562DD	8		4		
IC200	M54517P				8	
IC201	NJM2903D		8		4	
IC202	HD14538B		16		8	
IC203	HD14538B		16		8	
IC204	NJM2903D		8		4	
IC205	TC4081BP		14		7	
IC301	M54523				8	
IC302	TC4071BP	14			7	
IC303	M54523					8
IC304	M54543L	REFER TO SCHEMATIC				
IC305	M54543L					

IC304, IC305; M54543L

IN		OUT		MODE
1	2	1	2	
0	0	Z	Z	NO OPERATION
1	0	1	0	ROTATION
0	1	0	1	REVERSE ROTATION
1	1	0	0	BRAKE

0 ; LOW LEVEL
1 ; HIGH LEVEL
Z ; HIGH IMPEDANCE

TC-25 (TIME CODE READER) (MOTOR DRIVER)

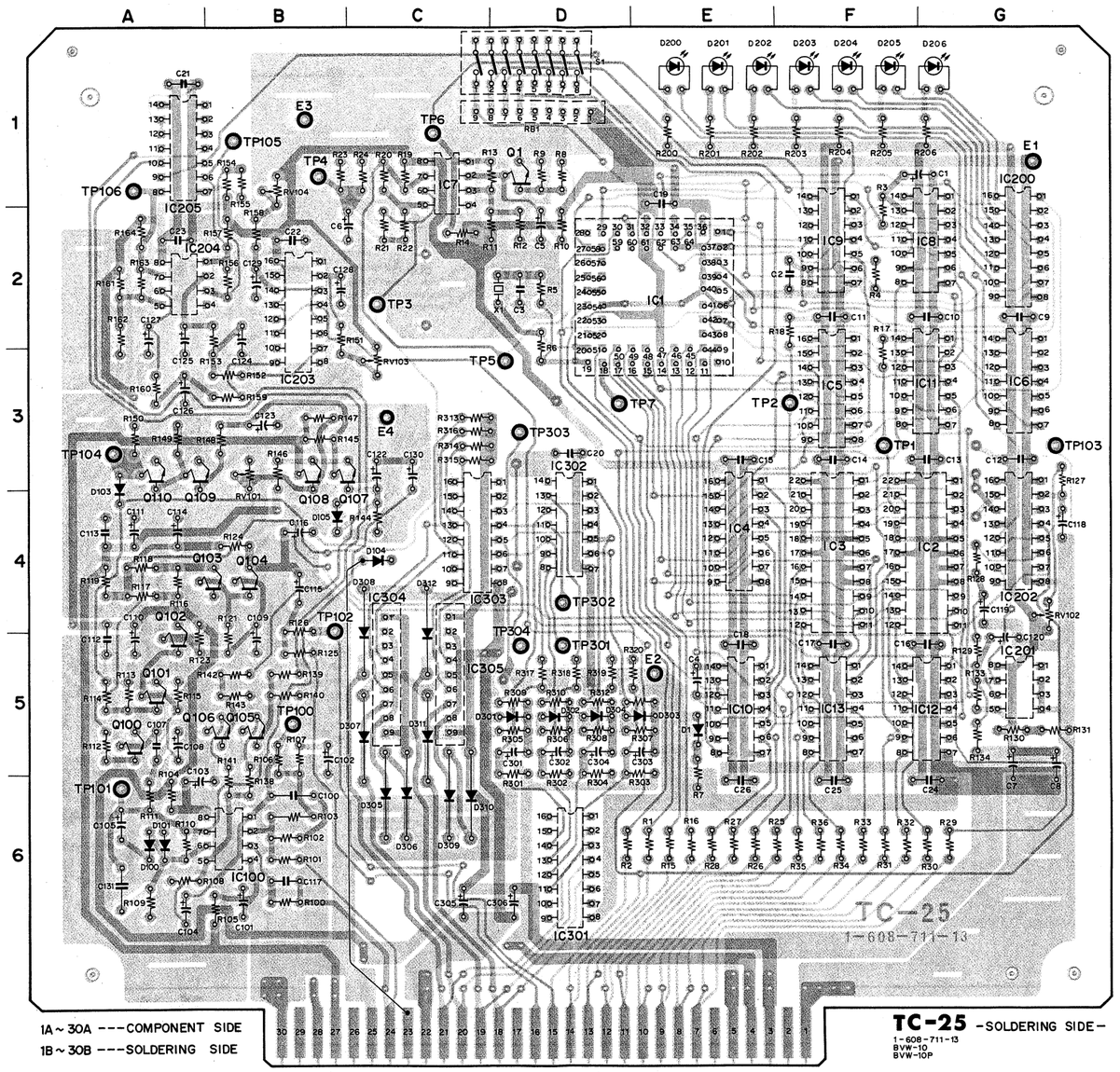

1A ~ 30A ---COMPONENT SIDE
1B ~ 30B ---SOLDERING SIDE

TC-25 -SOLDERING SIDE-
1-608-711-13
BVW-10
BVW-10P

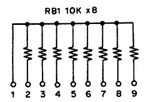

D1	E-5
D100	A-6
D101	A-6
D103	A-3
D104	C-4
D105	B-4
D200	E-1
D201	E-1
D202	E-1
D203	F-1
D204	F-1
D205	F-1
D206	G-1
D301	D-5
D302	D-5
D303	E-5
D304	D-5
D305	C-6
D306	C-6
D307	C-5
D308	C-5
D309	C-6
D310	C-6
D311	C-5
D312	C-5
E1	G-1
E2	E-5
E3	B-1
E4	C-3
IC1	E-2
IC2	G-4
IC3	F-4
IC4	E-4
IC5	F-3
IC6	G-3
IC7	C-2
IC8	G-2
IC9	F-2
IC10	E-5
IC11	G-3
IC12	G-5
IC13	F-5
IC100	B-6
IC200	G-2
IC201	G-5
IC202	G-4
IC203	B-2
IC204	A-2
IC205	A-1
IC301	D-6
IC302	D-4
IC303	C-4
IC304	C-5
IC305	C-5
RB1	D-1
RV101	B-3
RV102	G-4
RV103	C-3
RV104	B-2
S1	D-1
TP1	F-3
TP2	F-3
TP3	C-2
TP4	B-1
TP5	D-3
TP6	C-1
TP7	D-3
TP100	B-5
TP101	A-6
TP102	B-5
TP103	G-3
TP104	A-3
TP105	B-1
TP106	A-1
TP301	D-5
TP302	D-4
TP303	D-3
TP304	C-5
Q1	D-1
Q100	A-5
Q101	A-5
Q102	A-5
Q103	B-4
Q104	B-4
Q105	B-5
Q106	B-5
Q107	B-3
Q108	B-3
Q109	A-3
Q110	A-3
X1	C-2

PS-16 (DC REGULATOR)
(TAPE/HUMID SENSOR)
(MOTOR/SOLENOID DRIVER)

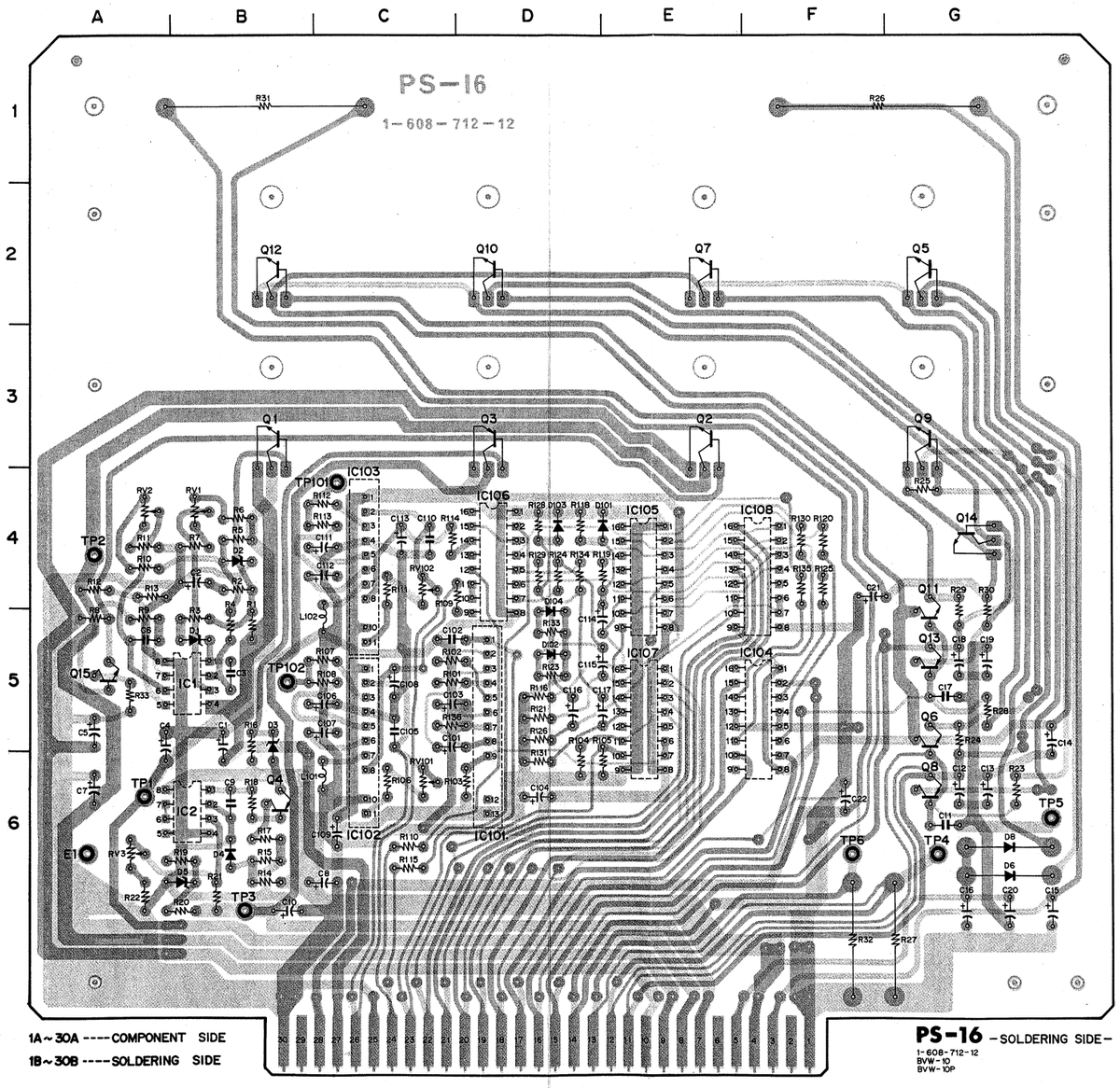

D1	A-5
D2	B-4
D3	B-5
D4	B-6
D5	A-6
D6	G-6
D8	G-6
D101	D-4
D102	D-5
D103	D-4
D104	D-4
E1	A-6
IC1	A-5
IC2	A-6
IC103	C-4
IC104	E-5
IC105	E-4
IC106	D-4
IC107	E-5
IC108	E-4
L101	B-8
L102	B-4
Q1	B-3
Q2	E-3
Q3	C-3
Q4	B-6
Q5	F-2
Q6	G-5
Q7	E-2
Q8	F-6
Q9	G-3
Q10	C-2
Q11	F-4
Q12	B-2
Q13	F-4
Q14	F-4
Q15	A-5
RV1	C-5
RV2	C-4
RV3	A-4
RV101	A-4
RV102	A-6
TP1	A-6
TP2	A-4
TP3	B-6
TP4	G-6
TP5	G-6
TP6	F-6
TP101	C-3
TP102	B-5

PS-16 (DC REGULATOR)
(TAPE/HUMID SENSOR)
(MOTOR/SOLENOID DRIVER)

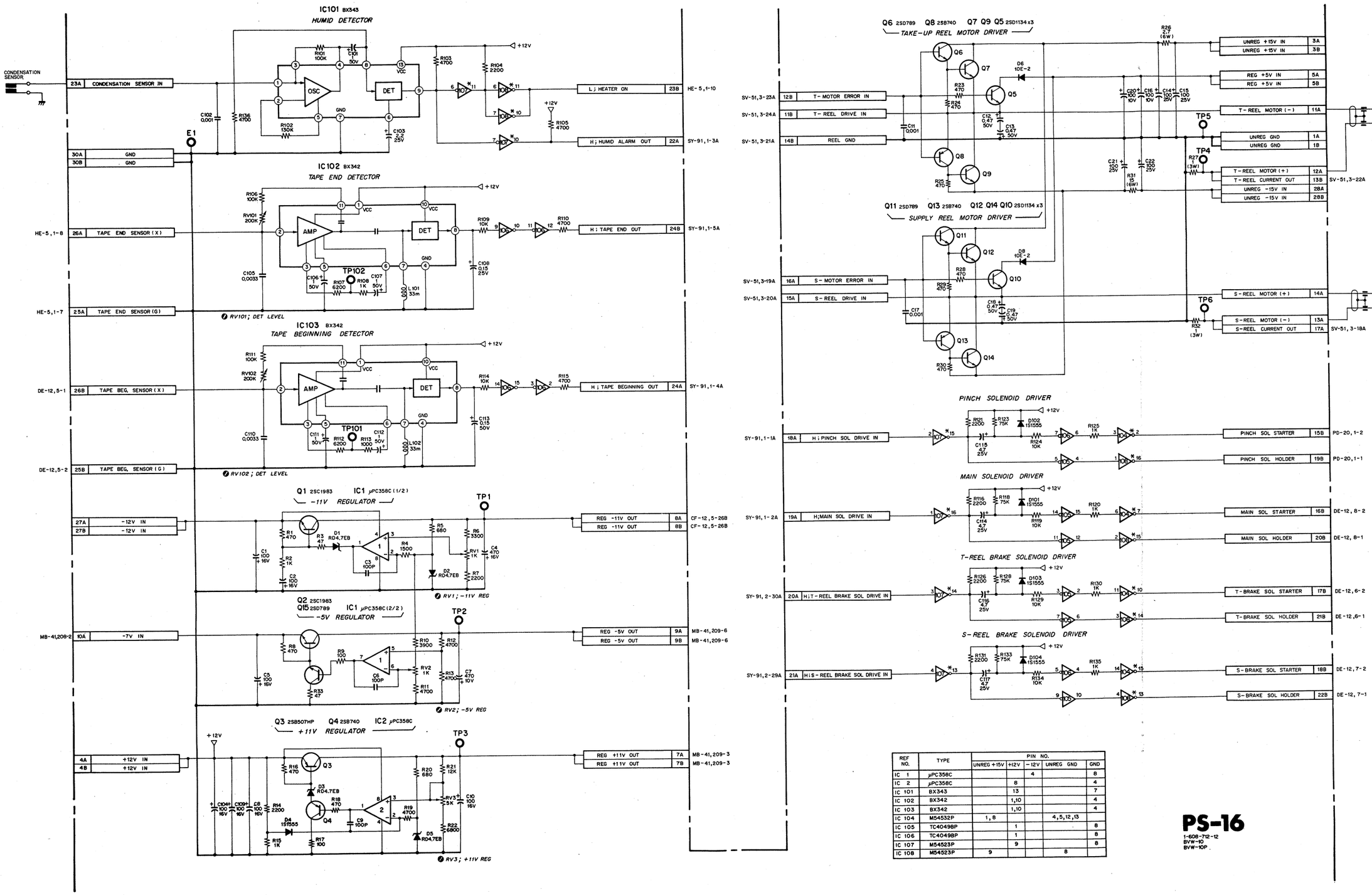

REF NO.	TYPE	PIN NO.				
		UNREG +15V	+12V	−12V	UNREG GND	GND
IC 1	μPC358C			4		8
IC 2	μPC358C		8			4
IC 101	BX343		13			7
IC 102	BX342		1,10			4
IC 103	BX342		1,10			4
IC 104	M54532P	1,8			4,5,12,13	
IC 105	TC4049BP		1			8
IC 106	TC4049BP		1			8
IC 107	M54523P		9			8
IC 108	M54523P	9			8	

 CP-52, SW-85, VR-8, HP-7, LA-4

CP-52 (FRONT PANEL)
SW-85
VR-8
HP-7
LA-4

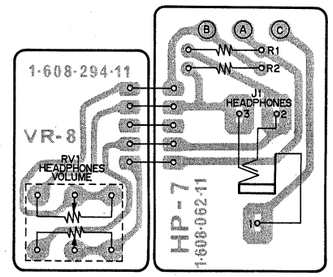

VR-8 -SOLDERING SIDE-
1-608-294-11
BVW-10
BVW-10P

HP-7 -SOLDERING SIDE-
1-608-062-11
BVW-10
BVW-10P

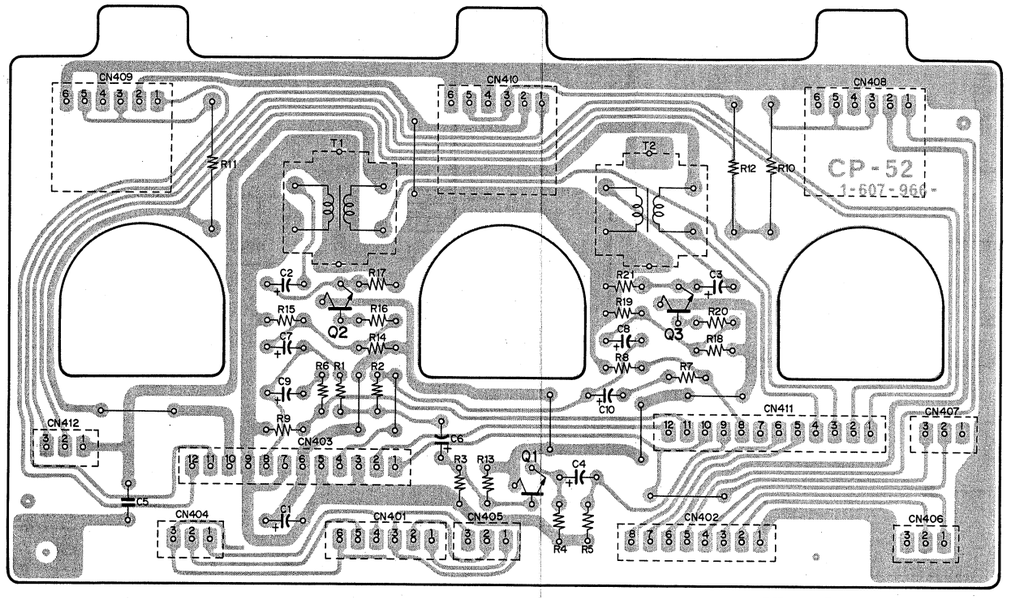

CP-52 -SOLDERING SIDE-
1-607-966-12
BVW-10
BVW-10P

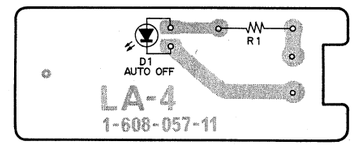

LA-4 -SOLDERING SIDE-
1-608-057-11
BVW-10
BVW-10P

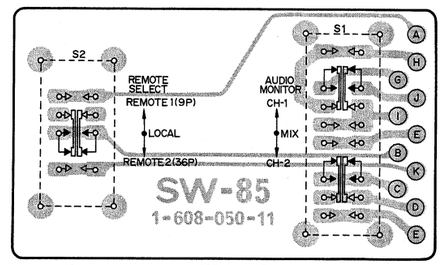

SW-85 -SOLDERING SIDE-
1-608-050-11
BVW-10
BVW-10P

CP-52 (FRONT PANEL)

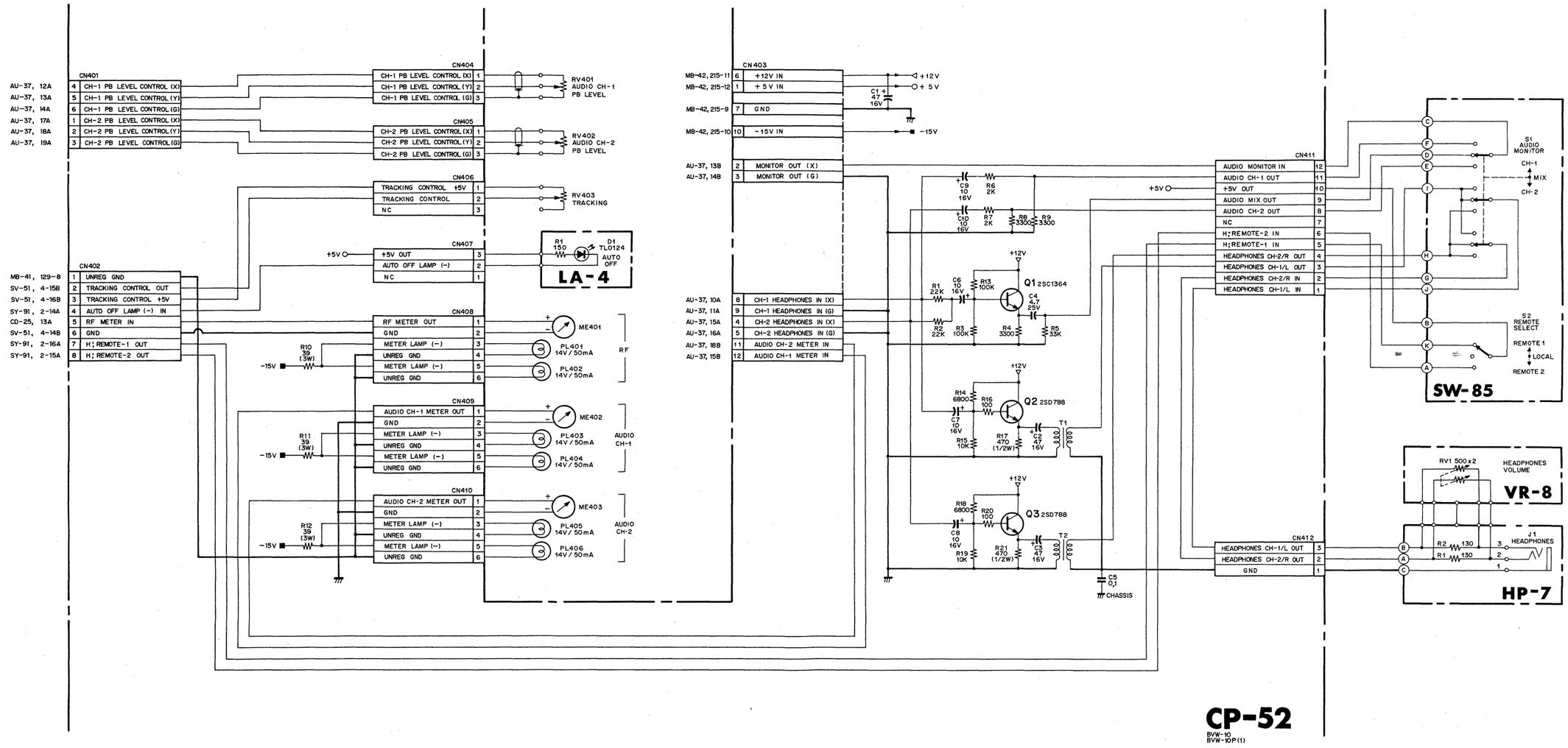

CP-56 (REAR PANEL)
SW-86

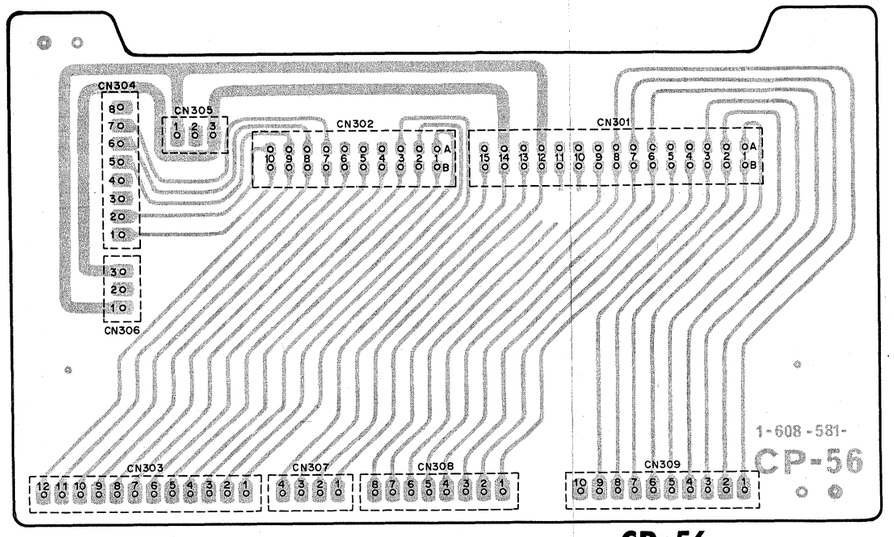

CP-56 - SOLDERING SIDE -
1-608-581-11,12
BVW-10
BVW-10P

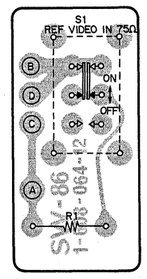

SW-86
-SOLDERING SIDE-
1-608-064-12
BVW-10
BVW-10P

CP-56 (REAR PANEL)

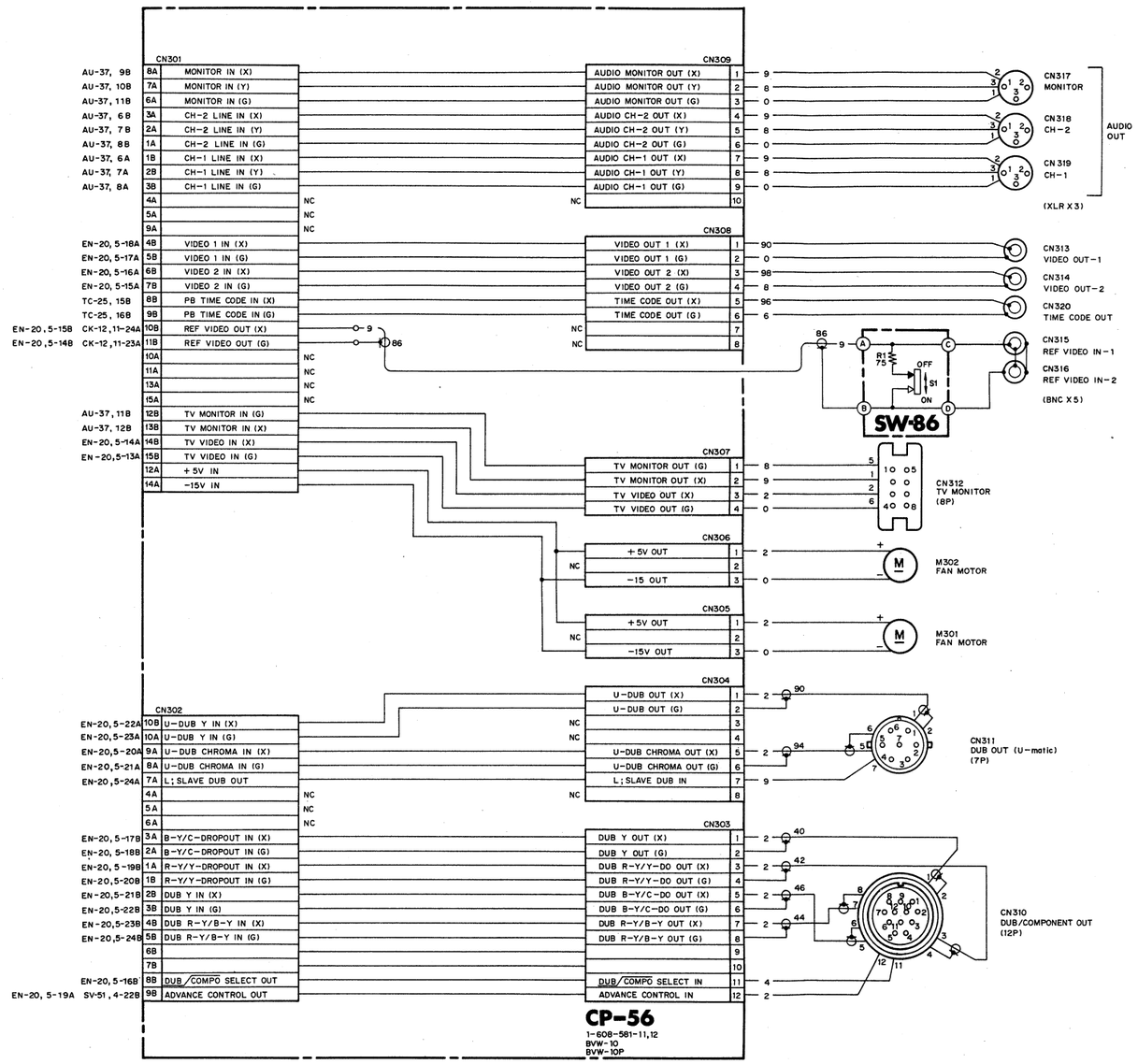

ST-22 (SUB CONTROL PANEL)

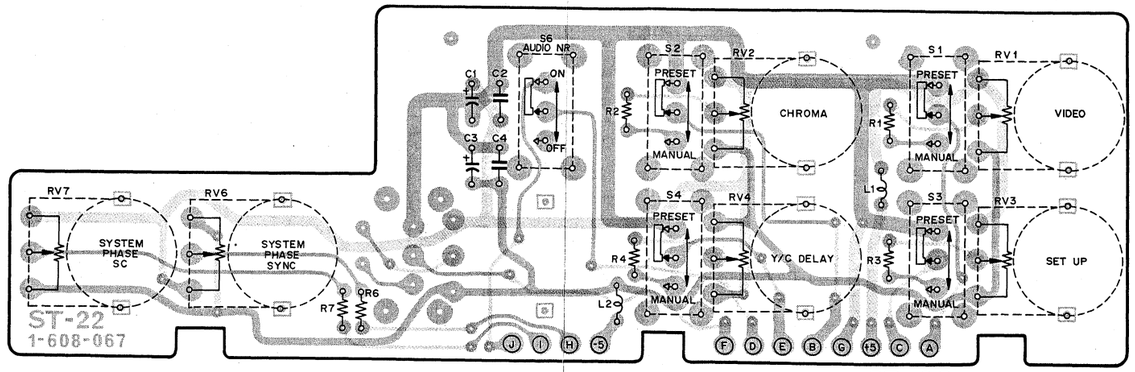

ST-22 - SOLDERING SIDE -

1-608-067-13,14
BVW-10P

ST-22 (SUB CONTROL PANEL)

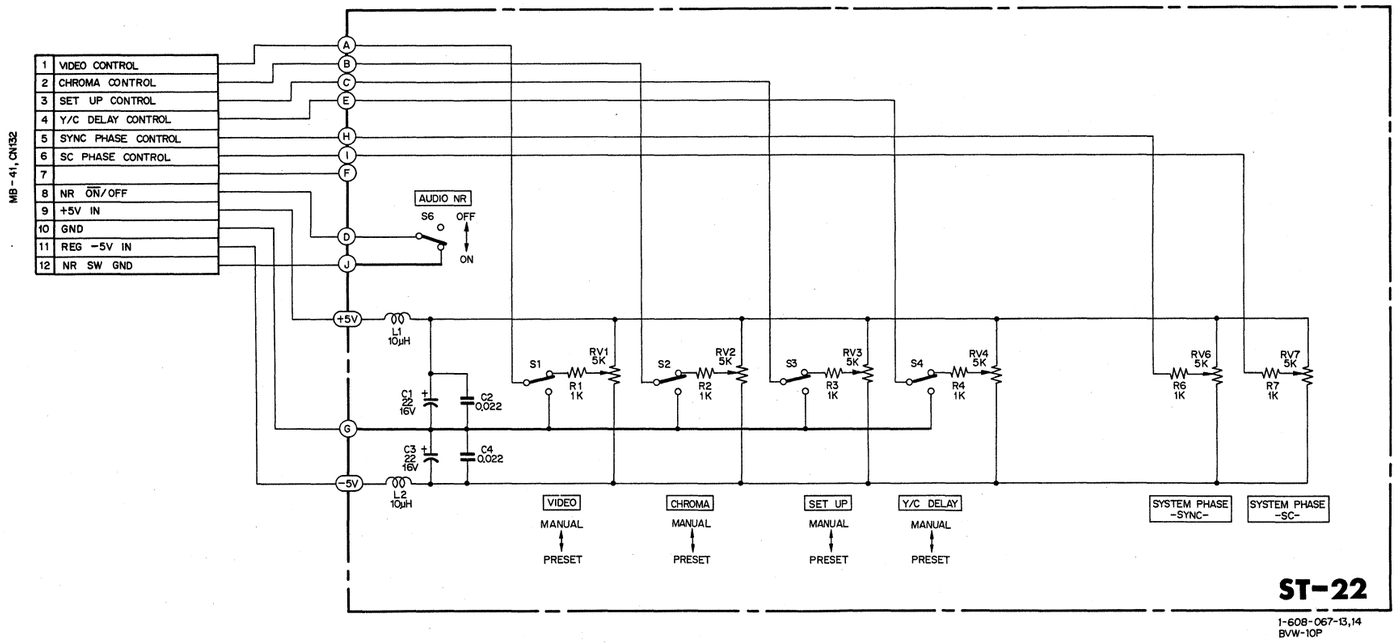

KY-32 (KEY PANEL)
DP-30 (TIME COUNTER DISPLAY)

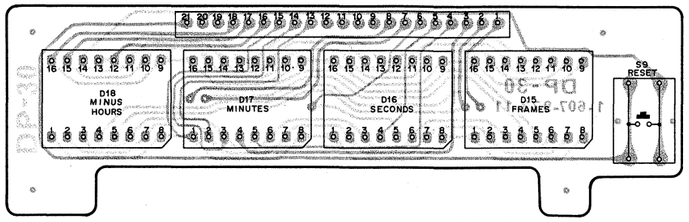

DP-30 – COMPONENT SIDE –
1-607-973-11
BVW-10
BVW-10P

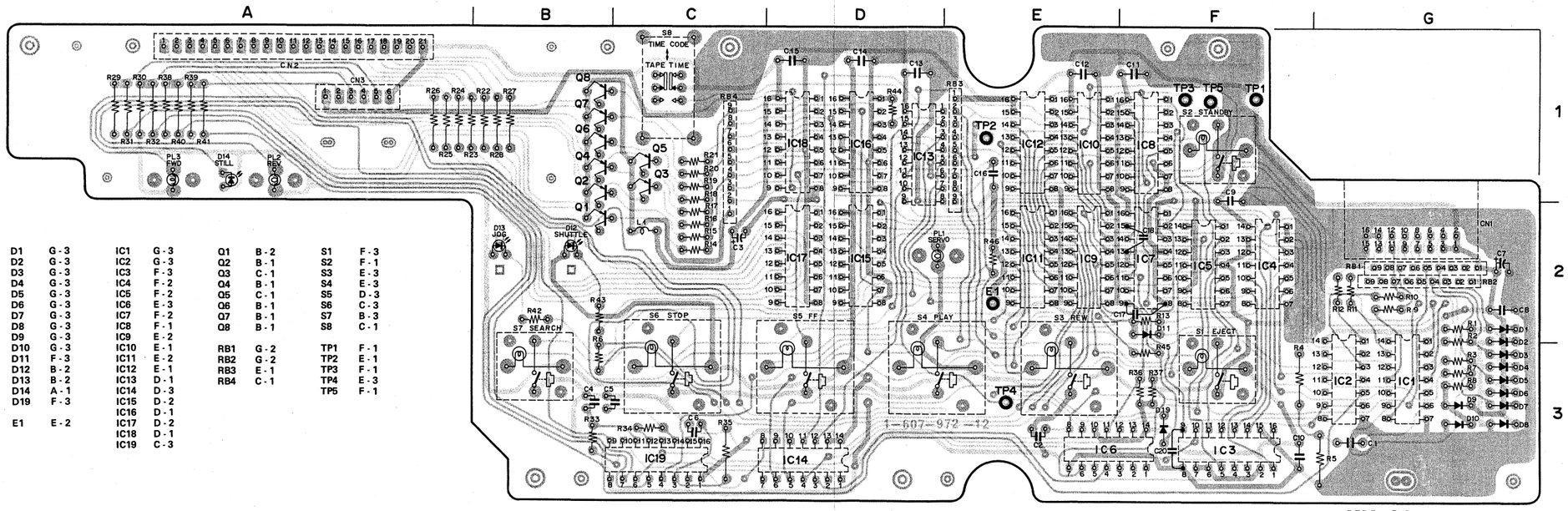

D1	G-3	IC1	G-3	Q1	B-2	S1	F-3
D2	G-3	IC2	G-3	Q2	B-1	S2	F-1
D3	G-3	IC3	F-3	Q3	C-1	S3	E-3
D4	G-3	IC4	F-2	Q4	B-1	S4	E-3
D5	G-3	IC5	F-2	Q5	C-1	S5	D-3
D6	G-3	IC6	E-3	Q6	B-1	S6	C-3
D7	G-3	IC7	F-2	Q7	B-1	S7	B-3
D8	G-3	IC8	F-1	Q8	B-1	S8	C-1
D9	G-3	IC9	E-2				
D10	G-3	IC10	E-1	RB1	G-2	TP1	F-1
D11	F-3	IC11	E-2	RB2	G-2	TP2	E-1
D12	B-2	IC12	E-1	RB3	E-1	TP3	F-1
D13	B-2	IC13	D-1	RB4	C-1	TP4	E-3
D14	A-1	IC14	D-3			TP5	F-1
D19	F-3	IC15	D-2				
		IC16	D-1				
E1	E-2	IC17	D-2				
		IC18	D-1				
		IC19	C-3				

KY-32 – SOLDERING SIDE –
1-607-972-12
BVW-10
BVW-10P

KY-32 (KEY PANEL)

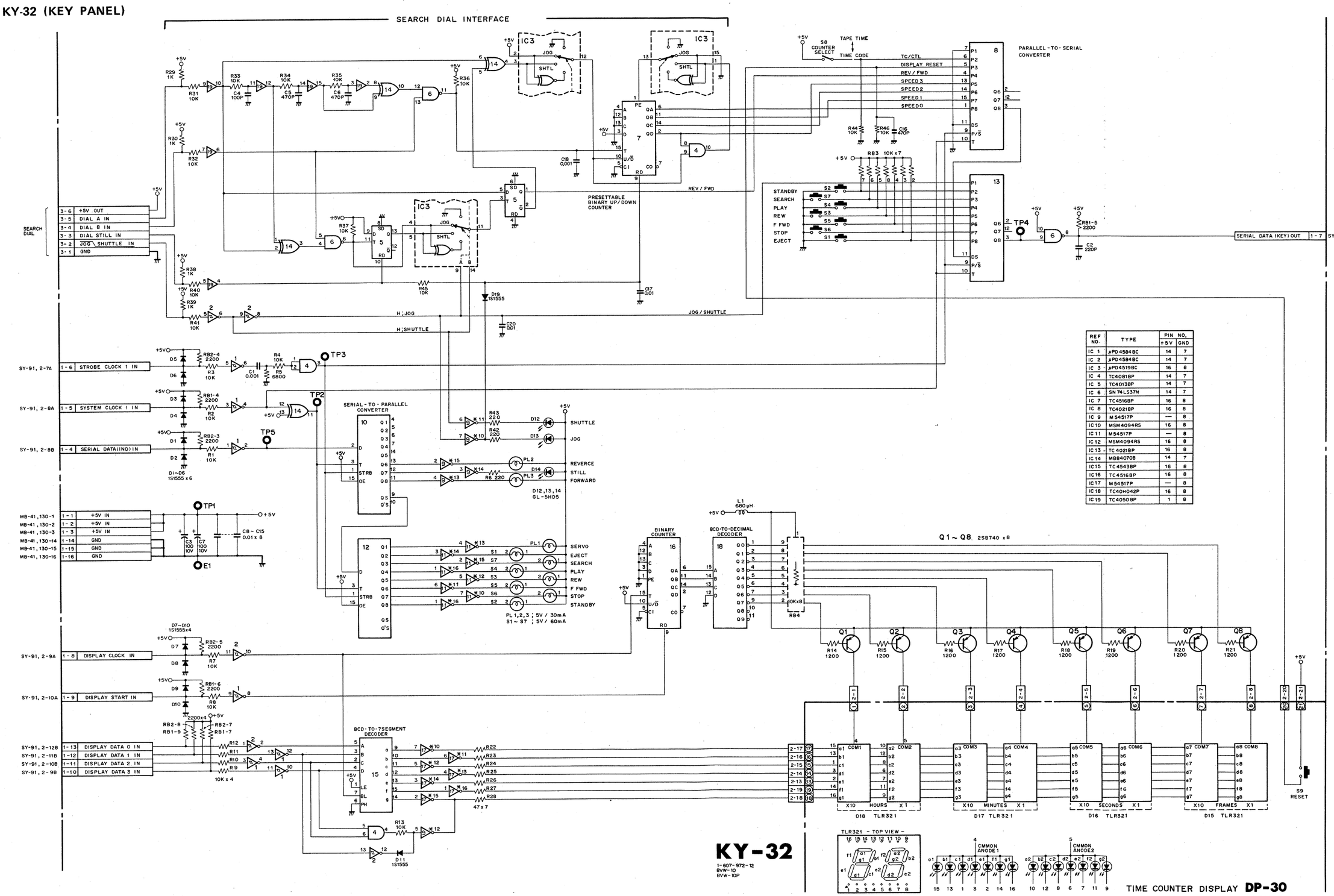

REF NO.	TYPE	PIN NO. +5V	PIN NO. GND
IC 1	μPD4584BC	14	7
IC 2	μPD4584BC	14	7
IC 3	μPD4519BC	16	8
IC 4	TC4081BP	14	7
IC 5	TC4013BP	14	7
IC 6	SN74LS37N	14	7
IC 7	TC4516BP	16	8
IC 8	TC4021BP	16	8
IC 9	M54517P	—	8
IC 10	MSM4094RS	16	8
IC 11	M54517P	—	8
IC 12	MSM4094RS	16	8
IC 13	TC4021BP	16	8
IC 14	MB8407OB	14	7
IC 15	TC4543BP	16	8
IC 16	TC4516BP	16	8
IC 17	M54517P	—	8
IC 18	TC40H042P	16	8
IC 19	TC4050BP	1	8

KY-32
1-607-972-12
BVW-10
BVW-10P

TIME COUNTER DISPLAY **DP-30**
1-607-973-11
BVW-10
BVW-10P

PC-9 (SEARCH DIAL)
PC-14

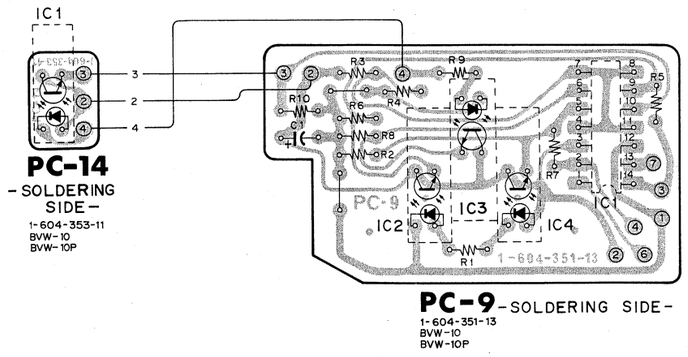

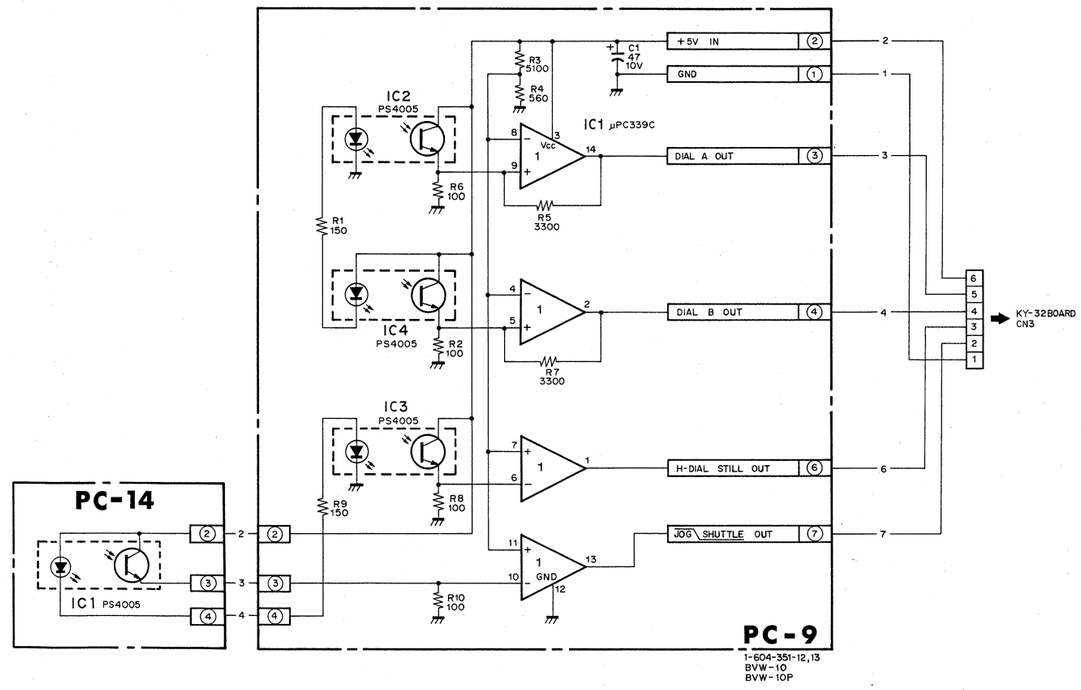

RE-6 (REMOTE CONNECTOR PANEL)

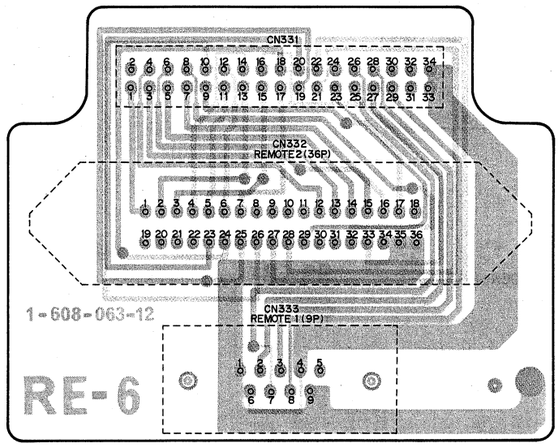

RE-6 -SOLDERING SIDE-
1-608-063-12
BVW-10
BVW-10P

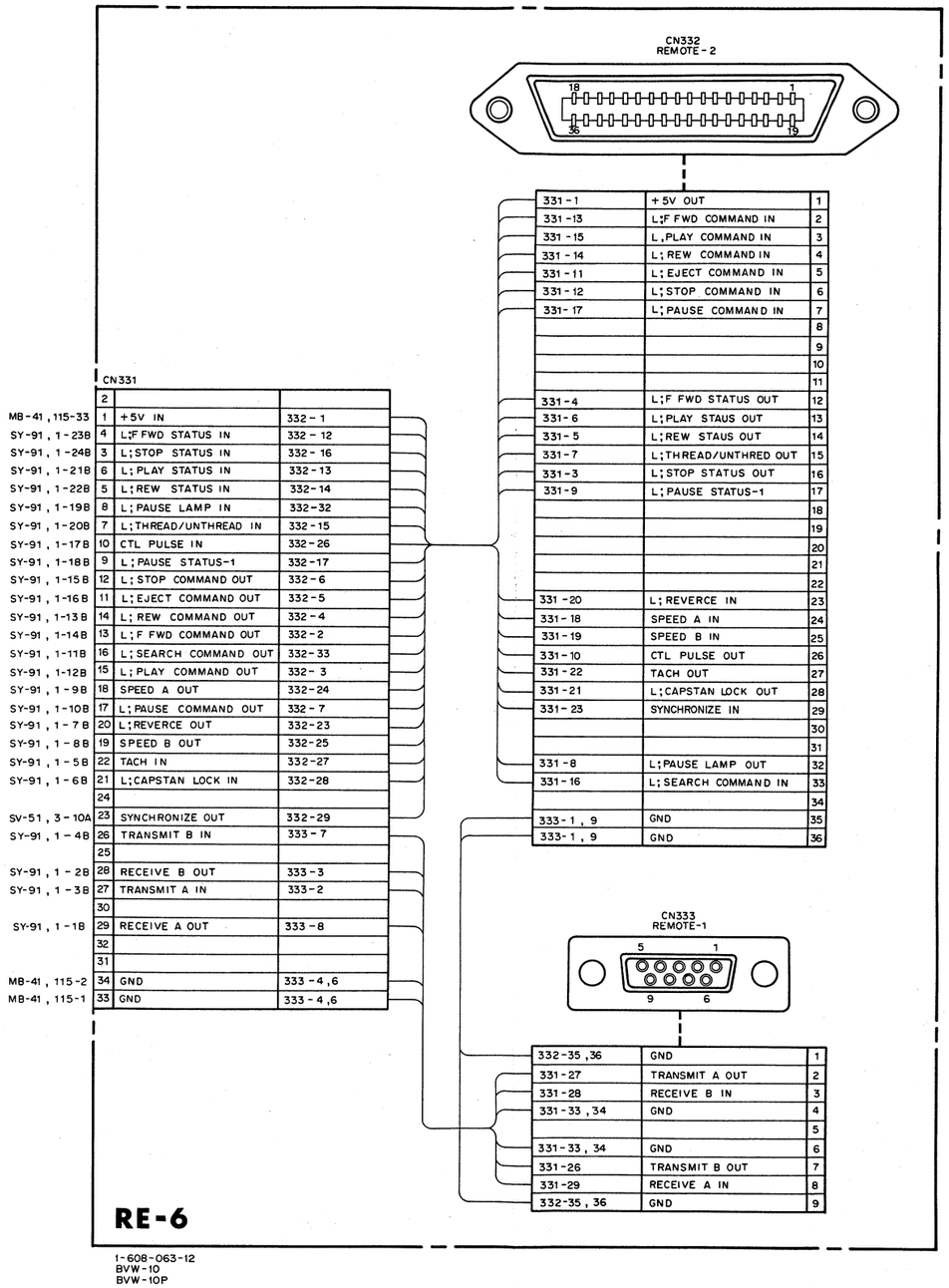

	CN331		
	2		
MB-41 , 115-33	1	+5V IN	332 - 1
SY-91 , 1 - 23B	4	L;F FWD STATUS IN	332 - 12
SY-91 , 1 - 24B	3	L;STOP STATUS IN	332 - 16
SY-91 , 1 - 21B	6	L;PLAY STATUS IN	332 - 13
SY-91 , 1 - 22B	5	L;REW STATUS IN	332 - 14
SY-91 , 1 - 19B	8	L;PAUSE LAMP IN	332 - 32
SY-91 , 1 - 20B	7	L;THREAD/UNTHREAD IN	332 - 15
SY-91 , 1 - 17B	10	CTL PULSE IN	332 - 26
SY-91 , 1 - 18B	9	L;PAUSE STATUS-1	332 - 17
SY-91 , 1 - 15B	12	L;STOP COMMAND OUT	332 - 6
SY-91 , 1 - 16B	11	L;EJECT COMMAND OUT	332 - 5
SY-91 , 1 - 13B	14	L;REW COMMAND OUT	332 - 4
SY-91 , 1 - 14B	13	L;F FWD COMMAND OUT	332 - 2
SY-91 , 1 - 11B	16	L;SEARCH COMMAND OUT	332 - 33
SY-91 , 1 - 12B	15	L;PLAY COMMAND OUT	332 - 3
SY-91 , 1 - 9B	18	SPEED A OUT	332 - 24
SY-91 , 1 - 10B	17	L;PAUSE COMMAND OUT	332 - 7
SY-91 , 1 - 7B	20	L;REVERCE OUT	332 - 23
SY-91 , 1 - 8B	19	SPEED B OUT	332 - 25
SY-91 , 1 - 5B	22	TACH IN	332 - 27
SY-91 , 1 - 6B	21	L;CAPSTAN LOCK IN	332 - 28
	24		
SV-51 , 3 - 10A	23	SYNCHRONIZE OUT	332 - 29
SY-91 , 1 - 4B	26	TRANSMIT B IN	333 - 7
	25		
SY-91 , 1 - 2B	28	RECEIVE B OUT	333 - 3
SY-91 , 1 - 3B	27	TRANSMIT A IN	333 - 2
	30		
SY-91 , 1 - 1B	29	RECEIVE A OUT	333 - 8
	32		
	31		
MB-41 , 115-2	34	GND	333 - 4 ,6
MB-41 , 115-1	33	GND	333 - 4 ,6

331 - 1	+ 5V OUT	1
331 - 13	L;F FWD COMMAND IN	2
331 - 15	L,PLAY COMMAND IN	3
331 - 14	L;REW COMMAND IN	4
331 - 11	L;EJECT COMMAND IN	5
331 - 12	L;STOP COMMAND IN	6
331- 17	L;PAUSE COMMAND IN	7
		8
		9
		10
		11
331 - 4	L;F FWD STATUS OUT	12
331 - 6	L;PLAY STAUS OUT	13
331 - 5	L;REW STAUS OUT	14
331 - 7	L;THREAD/UNTHRED OUT	15
331 - 3	L;STOP STATUS OUT	16
331 - 9	L;PAUSE STATUS-1	17
		18
		19
		20
		21
		22
331 - 20	L;REVERCE IN	23
331 - 18	SPEED A IN	24
331 - 19	SPEED B IN	25
331 - 10	CTL PULSE OUT	26
331 - 22	TACH OUT	27
331 - 21	L;CAPSTAN LOCK OUT	28
331 - 23	SYNCHRONIZE IN	29
		30
		31
331 - 8	L;PAUSE LAMP OUT	32
331 - 16	L;SEARCH COMMAND IN	33
		34
333 - 1 , 9	GND	35
333 - 1 , 9	GND	36

332 - 35 ,36	GND	1
331 - 27	TRANSMIT A OUT	2
331 - 28	RECEIVE B IN	3
331 - 33 , 34	GND	4
		5
331 - 33 , 34	GND	6
331 - 26	TRANSMIT B OUT	7
331 - 29	RECEIVE A IN	8
332 - 35 , 36	GND	9

RE-6
1-608-063-12
BVW-10
BVW-10P

DE-12, DE-11, SS-8

DE-12
DE-11
SS-8

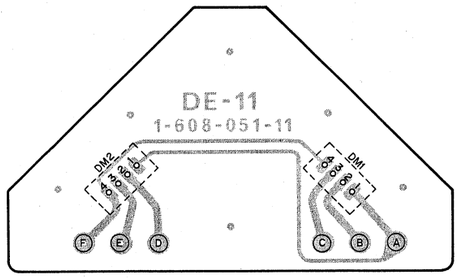

DE-11 -SOLDERING SIDE-
1-608-051-11
BVW-10
BVW-10P

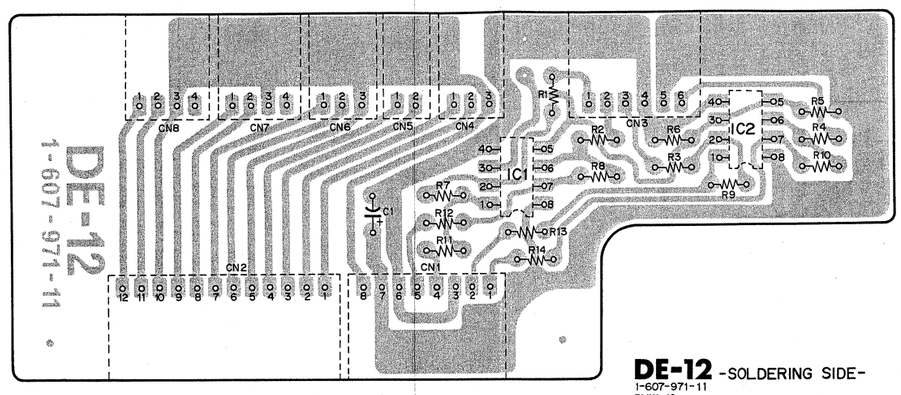

DE-12 -SOLDERING SIDE-
1-607-971-11
BVW-10
BVW-10P

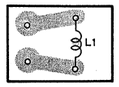

SS-8 -SOLDERING SIDE-
1-586-946-12
BVW-10
BVW-10P

DE-12

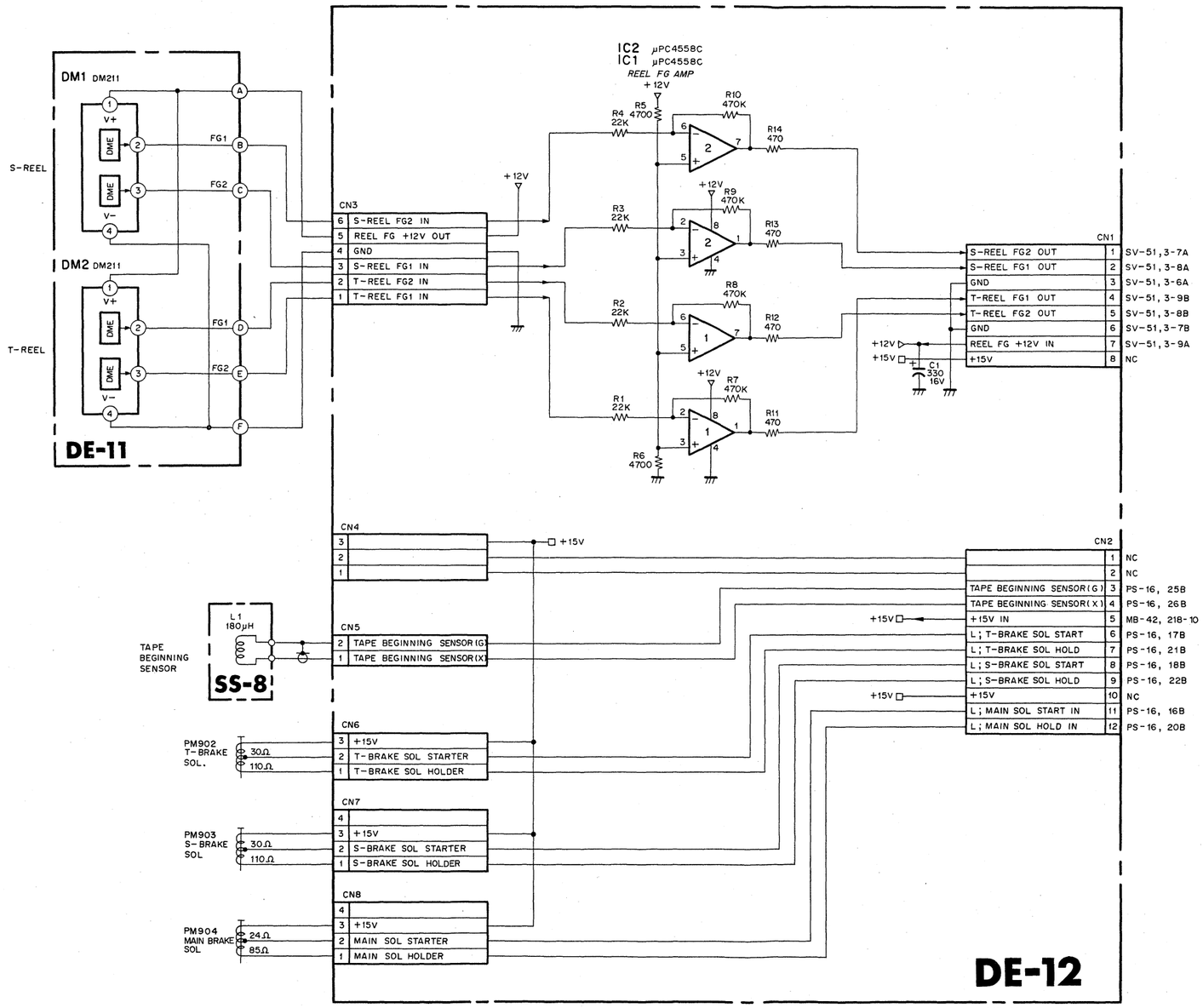
DM1 DM211
DM2 DM211
S-REEL
T-REEL
V+
V−
DME
FG1
FG2
DE-11
IC2 μPC4558C
IC1 μPC4558C
REEL FG AMP
+12V
R4 22K
R5 4700
R10 470K
R14 470
R3 22K
R9 470K
R13 470
R2 22K
R8 470K
R12 470
R1 22K
R7 470K
R11 470
R6 4700
CN3
S-REEL FG2 IN
REEL FG +12V OUT
GND
S-REEL FG1 IN
T-REEL FG2 IN
T-REEL FG1 IN
CN1
S-REEL FG2 OUT
S-REEL FG1 OUT
GND
T-REEL FG1 OUT
T-REEL FG2 OUT
GND
REEL FG +12V IN
+15V
SV-51,3-7A
SV-51,3-8A
SV-51,3-6A
SV-51,3-9B
SV-51,3-8B
SV-51,3-7B
SV-51,3-9A
NC
C1 330 16V
CN4
+15V
CN2
NC
NC
TAPE BEGINNING SENSOR(G)
TAPE BEGINNING SENSOR(X)
+15V IN
L ; T-BRAKE SOL START
L ; T-BRAKE SOL HOLD
L ; S-BRAKE SOL START
L ; S-BRAKE SOL HOLD
+15V
L ; MAIN SOL START IN
L ; MAIN SOL HOLD IN
PS-16, 25B
PS-16, 26B
MB-42, 218-10
PS-16, 17B
PS-16, 21B
PS-16, 18B
PS-16, 22B
NC
PS-16, 16B
PS-16, 20B
L1 180μH
TAPE BEGINNING SENSOR
SS-8
CN5
TAPE BEGINNING SENSOR(G)
TAPE BEGINNING SENSOR(X)
CN6
+15V
T-BRAKE SOL STARTER
T-BRAKE SOL HOLDER
PM902 T-BRAKE SOL.
30Ω
110Ω
CN7
+15V
S-BRAKE SOL STARTER
S-BRAKE SOL HOLDER
PM903 S-BRAKE SOL
30Ω
110Ω
CN8
+15V
MAIN SOL STARTER
MAIN SOL HOLDER
PM904 MAIN BRAKE SOL
24Ω
85Ω
DE-12
1-607-971-11
BVW-10
BVW-10P

HE-5, PH-16, LE-19, SS-8

HE-5
PH-16
LE-19
SS-8

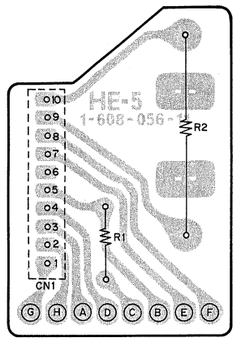

HE-5 -SOLDERING SIDE-
1-608-056-11, 12
BVW-10
BVW-10P

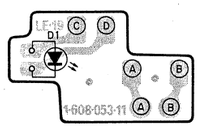

LE-19 -SOLDERING SIDE-
1-608-053-11
BVW-10
BVW-10P

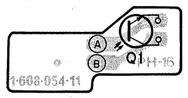

PH-16 -SOLDERING SIDE-
1-608-054-11
BVW-10
BVW-10P

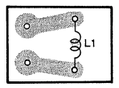

SS-8 -SOLDERING SIDE-
1-586-946-12
BVW-10
BVW-10P

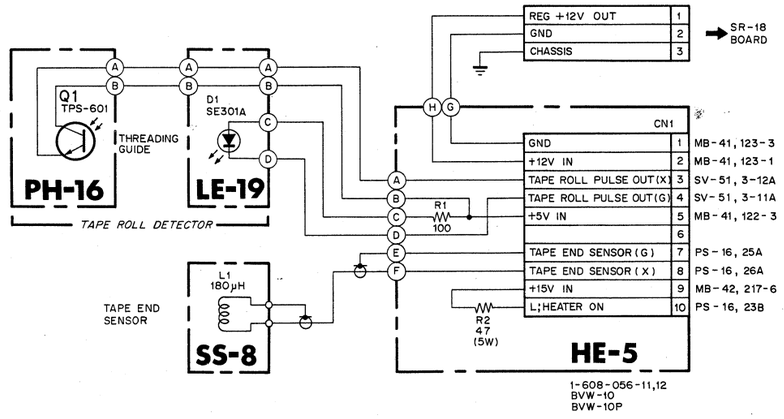

 CL-7, PC-17, PC-18

CL-7 (CASSETTE UP COMPARTMENT)
PC-17
PC-18

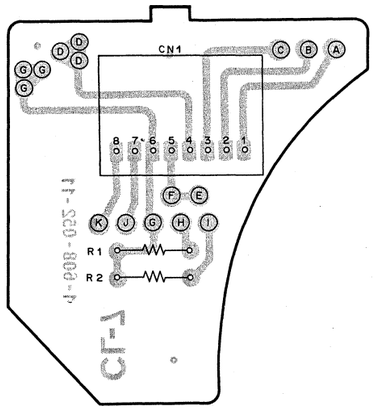

CL-7 - COMPONENT SIDE -
1-608-052-11
BVW-10
BVW-10P

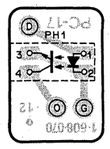

PC-17
- SOLDERING SIDE -
1-608-070-12
BVW-10
BVW-10P

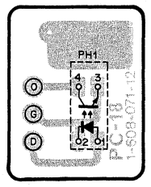

PC-18
- SOLDERING SIDE -
1-608-071-12
BVW-10
BVW-10P

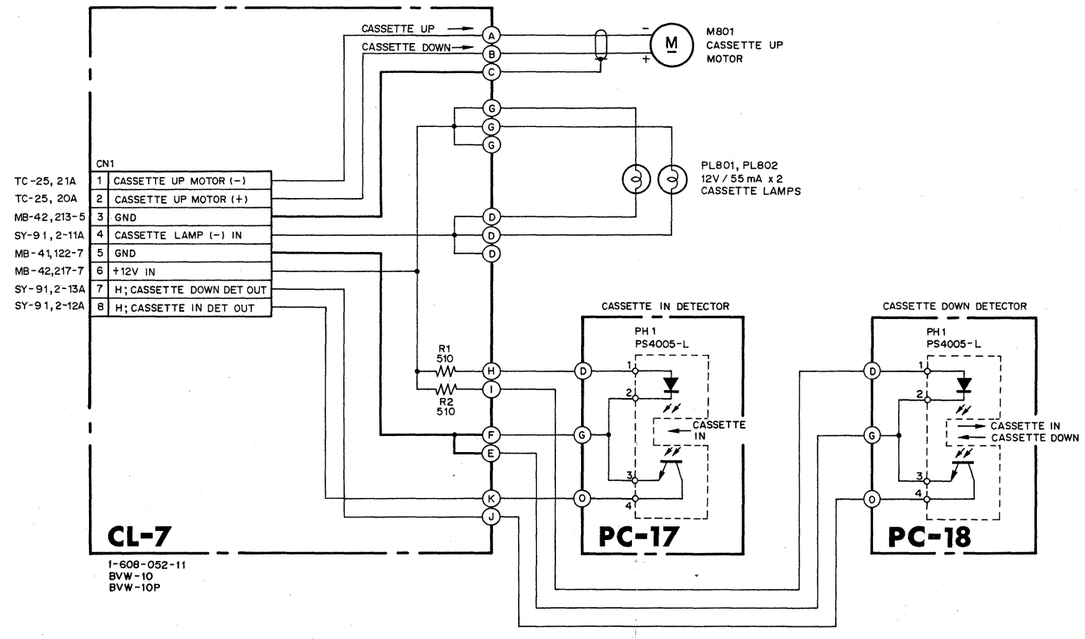

LM-4

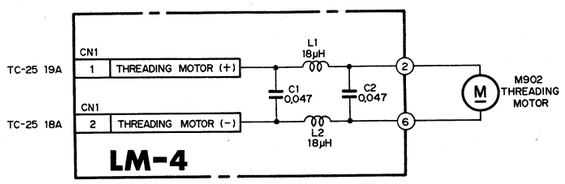

1-585-913-11
BVW-10
BVW-10P

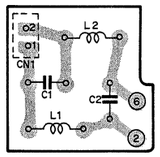

LM-4 -SOLDERING SIDE-

1-585-913-11
BVW-10
BVW-10P

PD-20

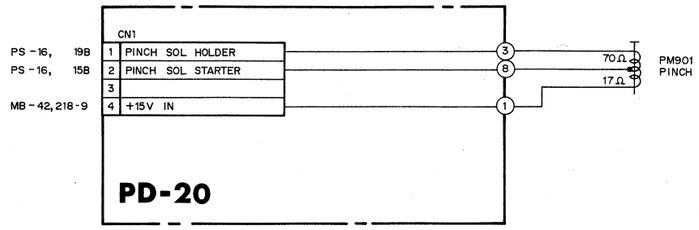

1-608-069-11
BVW-10
BVW-10P

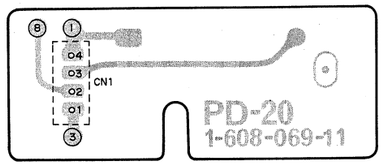

PD-20 -SOLDERING SIDE-

1-608-069-11
BVW-10
BVW-10P

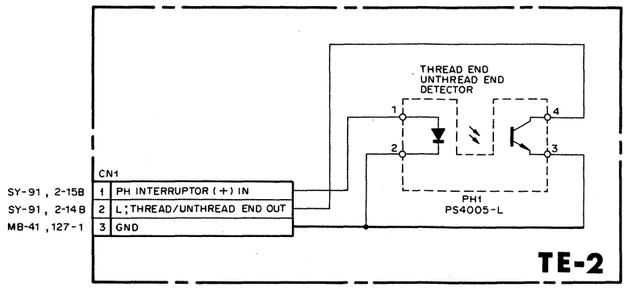

1-608-060-11
BVW-10
BVW-10P

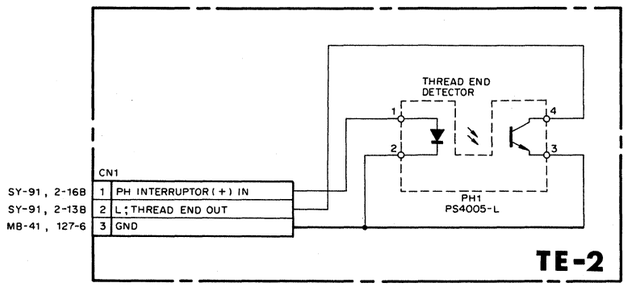

1-608-060-11
BVW-10
BVW-10P

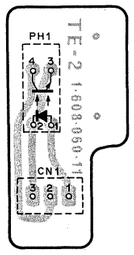

TE-2
-SOLDERING SIDE-
1-608-060-11
BVW-10
BVW-10P

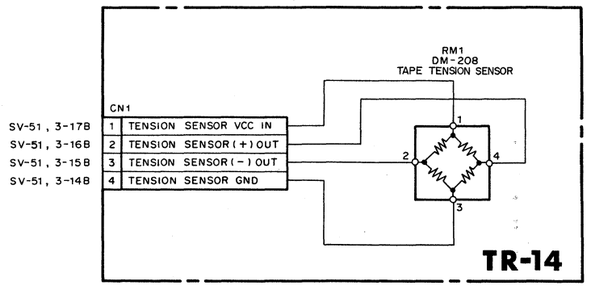

1-608-055-11,12,13
BVW-10
BVW-10P

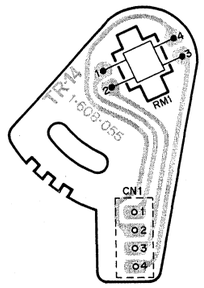

TR-14 -SOLDERING SIDE-
1-608-055-11, 12, 13
BVW-10
BVW-10P

TE-2

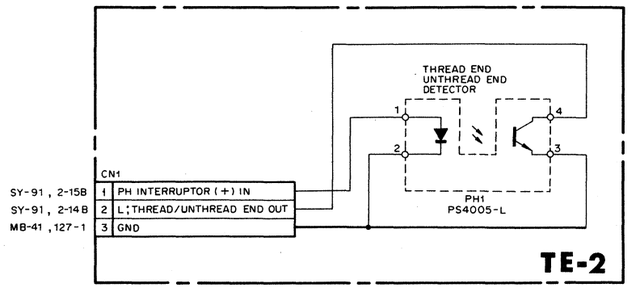

1-608-060-11
BVW-10
BVW-10P

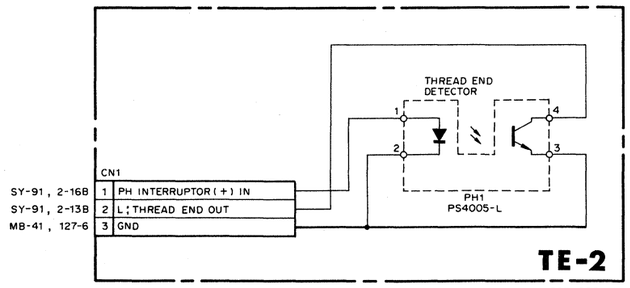

1-608-060-11
BVW-10
BVW-10P

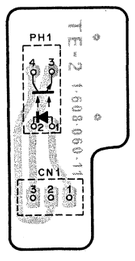

TE-2
-SOLDERING SIDE-
1-608-060-11
BVW-10
BVW-10P

TR-14

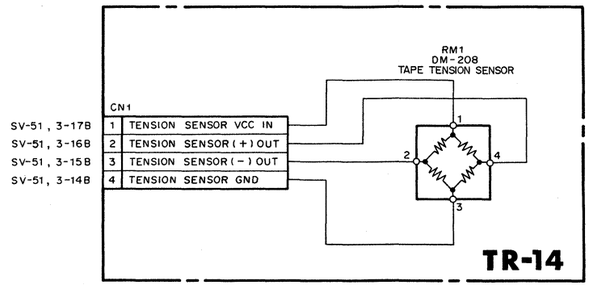

1-608-055-11,12,13
BVW-10
BVW-10P

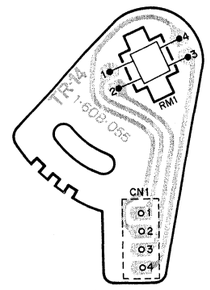

TR-14 -SOLDERING SIDE-
1-608-055-11, 12, 13
BVW-10
BVW-10P

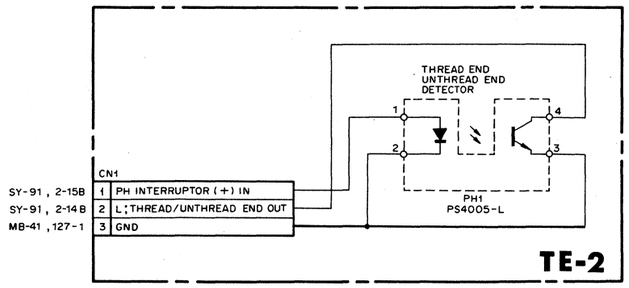

1-608-060-11
BVW-10
BVW-10P

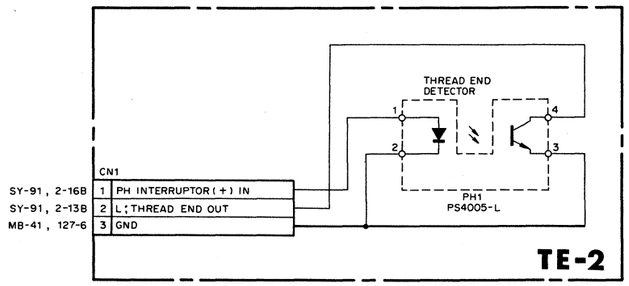

1-608-060-11
BVW-10
BVW-10P

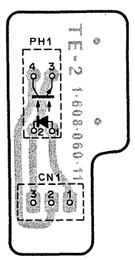

TE-2
-SOLDERING SIDE-
1-608-060-11
BVW-10
BVW-10P

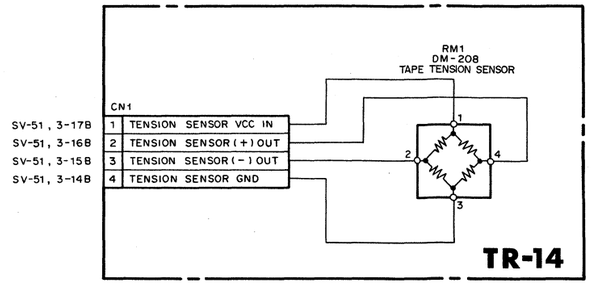

1-608-055-11,12,13
BVW-10
BVW-10P

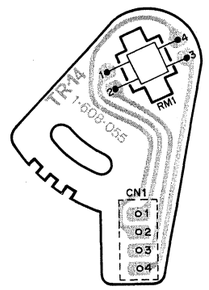

TR-14 -SOLDERING SIDE-
1-608-055-11, 12, 13
BVW-10
BVW-10P

AC-40

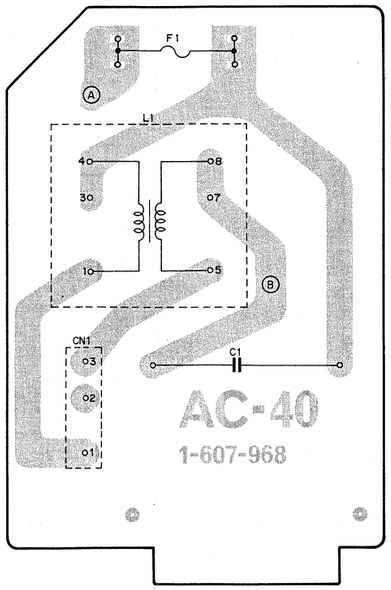

AC-40-SOLDERING SIDE-
1-607-968-11, 12, 13
BVW-10
BVW-10P

AC-40

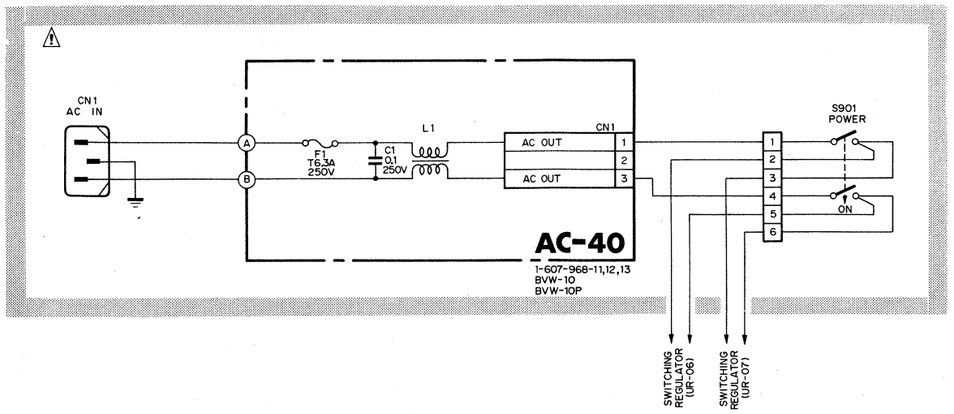

NOTE: **The shaded and ⚠ -marked components are critical to safety.**
Replace only with same components as specified.

MB-41 (MOTHER BOARD)

CP-56 BOARD

CN113		
1	U-DUB CHROMA OUT (X)	5-20A
2	U-DUB CHROMA OUT (G)	5-21A
3	U-DUB Y OUT (X)	5-22A
4	U-DUB Y OUT (G)	5-23A
5	DUB R-Y/B-Y OUT (G)	5-24B
6	DUB R-Y/B-Y OUT (X)	5-23B
7	DUB Y OUT (G)	5-22B
8	DUB Y OUT (X)	5-21B
9	R-Y/Y-DROPOUT OUT (G)	5-20B
10	R-Y/Y-DROPOUT OUT (X)	5-19B
11	B-Y/C-DROPOUT OUT (G)	5-18B
12	B-Y/C-DROPOUT OUT (X)	5-17B

CP-56 BOARD

CN114			
1	TV VIDEO OUT (G)	5-13A	
2	TV VIDEO OUT (X)	5-14A	
3	VIDEO OUT 2 (G)	5-15A	
4	VIDEO OUT 2 (X)	5-16A	
5	VIDEO OUT 1 (G)	5-17A	
6	VIDEO OUT 1 (X)	5-18A	
7	ADVANCE CONTROL IN	4-22B	
8	DUB/COMPO SELECT IN	5-16B	
9	REF VIDEO IN (X)	5-15B	11-24A
10	REF VIDEO IN (G)	5-14B	11-23A

UR-06 SW-REG

CN116		
1	+5V IN	+5V
2	+5V IN	
3	GND	
4	GND	
5	-7V IN	-7V
6	-12V IN	-12V

C1 47 25V, C2 47 25V, C3 47 25V

MB-42 BOARD

CN117		
1	+5V OUT	+5V
2	-7V OUT	-7V
3	-12V OUT	-12V
4	GND	
5	GND	
6	-15V IN	-15V

MB-42 BOARD

CN118		
1	+12V IN	+12V
2	+15V IN	+15V
3	REG +11V IN	+11V
4	REG -11V IN	-11V
5	UNREG GND	UNREG
6	REG -5V IN	-5V

TR-14 BOARD

CN120		
1	TENSION SENSOR VCC OUT	3-17B
2	TENSION SENSOR (+) IN	3-16B
3	TENSION SENSOR (-) IN	3-15B
4	TENSION SENSOR GND	3-14B

CAPSTAN MOTOR

CN121		
1	CAPSTAN MOTOR VCC OUT	4-26B
2	FWD\REV OUT	4-27B
3	CAPSTAN ERROR OUT (X)	4-28B
4	CAPSTAN ERROR OUT (G)	4-29B
5	CAPSTAN FG (B) IN	4-17A
6	CAPSTAN FG (A) IN	4-16A
7	GND	4-15A
8	REG +12V OUT	4-18A

CL-7, RD-20, HE-5 BOARD

CN122		
1	TAPE ROLL SENSOR (G)	3-11A
2	TAPE ROLL SENSOR (X)	3-12A
3	+5V OUT	+5V
4	H; TAPE SLACK IN	2-27A
5	H; CASSETTE DOWN IN	2-13A
6	H; CASSETTE IN IN	2-12A
7	GND	
8	CASSETTE LAMP (-) OUT	2-11A

SY-91

		B	CN 2	A		
		GND	1	GND		
			2			
			3			
			4			
			5			
			6			
	130-7	SERIAL DATA 1 IN	7	STROBE CLOCK 1 OUT	130-6	
	130-4	SERIAL DATA 1 OUT	8	SYSTEM CLOCK 1 OUT	130-5	
	130-10	DISPLAY DATA 3 OUT	9	DISPLAY CLOCK OUT	130-8	
	130-11	DISPLAY DATA 2 OUT	10	DISPLAY START OUT	130-9	
	130-12	DISPLAY DATA 1 OUT	11	CASSETTE LAMP (-) OUT	122-8	
	130-13	DISPLAY DATA 0 OUT	12	H; CASSETTE IN IN	122-6	
	127-5	L; THREAD END IN	13	H; CASSETTE DOWN IN	122-5	
	127-4	L; THREAD/UNTHREAD END IN	14	AUTO OFF LAMP (-) OUT	129-7	
	127-3	PH INTERRUPTOR (+) OUT	15	H; REMOTE -2 IN	129-6	
	127-2	PH INTERRUPTOR (+) OUT	16	H; REMOTE -1 IN	129-5	
			17			
			18	PINCH OFF DELAY OUT	4-25B	
	4-19A	H; REMOTE JOG OUT	19	H; CHROMA MUTE OUT	5-8A	
119-1	12-7A 6-7A	L; NORMAL FWD OUT	20	H; TIME CODE MUTE OUT	119-2	
	5-8B	H; VIDEO MUTE OUT	21	TAPE DIRECTION (F/R) IN	4-17B	6-17A 119-7
	4-22A	SEARCH FREQ OUT	22	SYSTEM CLOCK 2 OUT	4-20A	
	4-23A	TAPE ROLL PULSE IN	23	STROBE CLOCK 2 OUT	4-21A	
	4-24A	S-REEL 4FG IN	24	H; AUDIO MUTE OUT	119-6	
	4-25A	T-REEL 4FG IN	25	H; F FWD CONTROL OUT	119-5	
	4-26A	CAPSTAN 4FG IN	26			
	4-27A	1/2 VD IN	27	H; TAPE SLACK IN	122-4	
119-3	4-28A	EDIT CTL IN	28			
	4-29A	SERIAL DATA 2 IN	29	H; S-REEL BRAKE OUT	119-8	
	4-30A	SERIAL DATA 2 OUT	30	H; T-REEL BRAKE OUT	119-12	

	B	CN 1	A		
115-5	RECEIVE A IN	1	H; PINCH SOL DRIVE OUT	119-13	
115-8	RECEIVE B IN	2	H; MAIN SOL DRIVE OUT	119-14	
115-7	TRANSMIT A OUT	3	H; HUMID DET IN	119-15	
115-10	TRANSMIT B OUT	4	H; TAPE BEGINNING IN	119-17	
115-14	TACH OUT	5	H; TAPE END IN	119-19	
115-13	L; CAPSTAN LOCK OUT	6	H; UNTHREADING OUT	119-22	
115-16	L; REVERCE IN	7	H; THREADING OUT	119-25	
115-15	SPEED B IN	8	H; CASSETTE UP OUT	119-28	
115-18	SPEED A IN	9	H; CASSETTE DOWN OUT	119-30	
115-17	L; PAUSE COMMAND IN	10	HOURS METER (+) OUT	131-1	
115-20	L; SEARCH COMMAND IN	11	H; TC BUSY IN	119-33	
115-19	L; PLAY COMMAND IN	12	TC DATA OUTPUT SELECT IN	119-35	
115-22	L; REW COMMAND IN	13	TIME CODE ADDRESS 3 OUT	119-36	
115-21	L; F FWD COMMAND IN	14	TIME CODE ADDRESS 2 OUT	119-37	
115-24	L; STOP COMMAND IN	15	TIME CODE ADDRESS 1 OUT	119-39	
115-23	L; EJECT COMMAND IN	16	TIME CODE ADDRESS 0 OUT	119-40	
115-26	CTL PULSE OUT	17	TIME CODE DATA 7 IN	119-41	
115-25	L; PAUSE STATUS-1	18	TIME CODE DATA 6 IN	119-43	
115-28	L; PAUSE LAMP OUT	19	TIME CODE DATA 5 IN	119-44	
115-27	L; THREAD/UNTHREAD OUT	20	TIME CODE DATA 4 IN	119-45	
115-30	L; PLAY STATUS OUT	21	TIME CODE DATA 3 IN	119-47	
115-29	L; REW STATUS OUT	22	TIME CODE DATA 2 IN	119-48	
115-32	L; F FWD STATUS OUT	23	TIME CODE DATA 1 IN	119-49	
115-31	L; STOP STATUS OUT	24	TIME CODE DATA 0 IN	119-50	
		25			
+5V	+5V IN	26	+5V IN	+5V	
+12V	+12V IN	27	+12V IN	+12V	
+15V	+15V IN	28	+15V IN	+15V	
UNREG	UNREG GND	29	UNREG GND	UNREG	
	GND	30	GND		

SV-51

		B	CN 4	A		
		GND	1	GND		
			2			
-15V		-15V IN	3	-15V IN	-15V	
-12V		-12V IN	4	-12V IN	-12V	
-5V		-5V IN	5	-5V IN	-5V	
			6			
8-27A	133-3	DEMODED Y IN (X)	7			
8-26A	133-4	DEMODED Y IN (G)	8	DRUM PHASE PG IN	125-3	
			9	DRUM SPEED PG (B) IN	125-2	
		GND	10	DRUM SPEED PG (A) IN	125-1	
	6-11A	Y-BLKG PULSE OUT	11	GND	125-4	
			12	CTL HEAD (G)	124-2	
			13	CTL HEAD (Y)	124-1	
	129-3	GND	14	CTL HEAD (X)	124-3	
	129-2	TRACKING VR IN	15	GND	121-7	
	129-4	TRACKINC VR (+) OUT	16	CAPSTAN FG (A) IN	121-6	
119-7	6-17A 2-21A	TAPE DIRECTION (F/R) OUT	17	CAPSTAN FG (B) IN	121-5	
			18	REG +12V OUT	121-8	
			19	H; REMOTE JOG IN	2-19B	
			20	SYSTEM CLOCK 2 IN	2-22A	
			21	STROBE CLOCK 2 IN	2-23A	
	114-7	ADVANCE CONTROL IN	22	SEARCH FREQ IN	2-22B	
		REF SYNC IN (G)	23	TAPE ROLL PULSE OUT	2-23B	119-4
	11-15A 5-13B	REF SYNC IN (X)	24	S-REEL 4FG OUT	2-24B	
	2-18A	PINCH OFF DELAY IN	25	T-REEL 4FG OUT	2-25B	
	121-1	CAPSTAN MOTOR VCC OUT	26	CAPSTAN 4FG OUT	2-26B	
	121-2	FWD\REV OUT	27	1/2 VD OUT	2-27B	
	121-3	CAPSTAN ERROR OUT (X)	28	EDIT CTL OUT	2-28B	119-3
	121-4	CAPSTAN ERROR OUT (G)	29	SERIAL DATA 2 OUT	2-29B	
UNREG		UNREG GND	30	SERIAL DATA 2 IN	2-30B	

	B	CN 3	A		
		1	DRUM MOTOR VCC OUT	126-1	
6-13A	C-BLKG PULSE OUT	2			
119-11	Y-SWING PULSE OUT	3	DRUM ERROR OUT	126-2	
119-10	C-SWING PULSE OUT	4	DRUM MOTOR GND	126-3	
UNREG	UNREG GND	5	UNREG GND	UNREG	
		6	S-REEL FG GND	128-5	
128-6	T-REEL FG GND	7	S-REEL FG-2 IN	128-4	
128-7	T REEL FG 2 IN	8	S REEL FG-1 IN	128-3	
128-8	T-REEL FG 1 IN	9	REEL FG VCC OUT	128-1	
		10	SYNCHRONIZE IN	115-11	
		11	TAPE ROLL SENSOR (G)	122-1	
		12	TAPE ROLL SENSOR (X)	122-2	
		13			
120-1	TENSION SENSOR GND	14			
120-2	TENSION SENSOR (-)	15	GND		
120-3	TENSION SENSOR (+)	16	GND		
120-4	TENSION SENSOR VCC OUT	17			
		18	S-REEL CURRENT IN	119-18	
5-19A	11-11B CF PULSE IN (PAL)	19	S-REEL ERROR OUT	119-21	
		20	S-REEL DRIVE OUT	119-24	
	6-18A FP 1 IN (PAL)	21	REEL GND	119-26	
		22	T-REEL CURRENT IN	119-29	
	6-20A FP 2 IN (PAL)	23	T-REEL ERROR OUT	119-31	
		24	T-REEL DRIVE OUT	119-32	
		25			
+5V	+5V IN	26	+5V IN	+5V	
+12V	+12V IN	27	+12V IN	+12V	
+15V	+15V IN	28	+15V IN	+15V	
UNREG	UNREG GND	29	UNREG GND	UNREG	
	GND	30	GND		

EN-20

		B	CN 6	A		
		GND	1	GND		
-11V		REG -11V IN	2	REG -11V IN	-11V	
-15V		-15V IN	3	-15V IN	-15V	
-12V		-12V IN	4	-12V IN	-12V	
-5V		REG -5V IN	5	REG -5V IN	-5V	
			6			
			7	L; NORMAL FWD IN	2-20B	12-7A 119-1
			8			
			9			
	11-6B	C CLAMP INH IN	10			
			11	Y-BLKG PULSE IN	4-11B	
			12			
			13	C-BLKG PULSE IN	3-2B	
			14			
	11-15B	1st FIELD PULSE IN	15	C-DROPOUT DET PULSE IN (G)	133-8	6-22B
			16	C-DROPOUT DET PULSE IN (X)	133-7	10-23A
			17	TAPE DIRECTION (F/R) IN	2-21A	4-17B 119-7
			18	FP 1 OUT (PAL)	3-21B	
			19			
MB-42, 4-13B		DUB R-Y/B-Y IN (G)	20	FP 2 OUT (PAL)	3-23B	
MB-42, 4-12B		DUB R-Y/B-Y IN (X)	21			
6-15A	133-8	C-DROPOUT DET PULSE IN (G)	22			
9-10A	7-10A	CR DO IN	23	F O/E IN	11-6A	9-6A
	133-6	Y-DROPOUT DET PULSE IN (G)	24			
133-5	8-24A	Y-DROPOUT DET PULSE IN (X)	25	H; IN PHASE OUT	11-17B	
MB-42, 3-13B		DUB Y IN (G)	26			
MB-42, 3-12B		DUB Y IN (X)	27			
133-2	8-28A	R-Y/B-Y IN (G)	28	HUE CONTROL IN (NTSC)	132-7	
133-1	8-29A	R-Y/B-Y IN (X)	29			
		GND	30	GND		

	B	CN 5	A		
11-2A	BF IN	1	C-BLKG IN	11-4B	
7-1B	7-1A R-Y IN (G)	2	R ZERO IN	9-7B	11-7B
7-2B	7-2A R-Y IN (X)	3			
7-3B	7-3A B-Y IN (G)	4	+V/-V IN	11-7A	
7-4B	7-4A B-Y IN (X)	5	VD IN	11-5A	9-5A
7-5B	7-5A Y IN (G)	6	SC PHASE CONTROL IN	132-6	
7-6B	7-6A Y IN (X)	7	HD IN	11-4A	9-4A
2-2B	H; VIDEO MUTE IN	8	H; CHROMA MUTE IN	2-19A	
	GND	9	GND		
11-20B	4fsc (+) OUT	10	4fsc (-) OUT	11-20A	
	GND	11	GND		
11-14A	BG IN	12	INT/EXT IN	11-13A	
11-15A	4-24B REF SYNC IN (X)	13	TV VIDEO OUT (G)	114-1	
114-10	11-23A REF VIDEO IN (G)	14	TV VIDEO OUT (X)	114-2	
114-9	11-24A REF VIDEO IN (X)	15	VIDEO OUT 2 (G)	114-3	
114-8	DUB/COMPO SELECT IN	16	VIDEO OUT 2 (X)	114-4	
113-12	B-Y/C-DROPOUT OUT (X)	17	VIDEO OUT 1 (G)	114-5	
113-11	B-Y/C-DROPOUT OUT (G)	18	VIDEO OUT 1 (X)	114-6	
113-10	R-Y/Y-DROPOUT OUT (X)	19	CF PULSE IN (PAL)	11-11B	3-19B
113-9	R-Y/Y-DROPOUT OUT (G)	20	U-DUB CHROMA OUT (X)	113-1	
113-8	DUB Y OUT (X)	21	U-DUB CHROMA OUT (G)	113-2	
113-7	DUB Y OUT (G)	22	U-DUB Y OUT (X)	113-3	
113-6	DUB R-Y/B-Y OUT (X)	23	U-DUB Y OUT (G)	113-4	
113-5	DUB R-Y/B-Y OUT (G)	24	L; SLAVE DUB IN	119-9	
		25			
+5V	+5V IN	26	+5V IN	+5V	
+12V	+12V IN	27	+12V IN	+12V	
+15V	+15V IN	28	+15V IN	+15V	
		29			
	GND	30	GND		

P

	B	
	GND	
-11V	REG -11V IN	
-12V	-12V IN	
-5V	REG -5V IN	
12-6B	CLAMP OFF IN	
10-7B	CW DATA 2^7 OUT	
10-8B	CW DATA 2^5 OUT	
10-9B	CW DATA 2^3 OUT	
10-10B	CW DATA 2^1 OUT	
	GND	
12-12B	10-12B CW CK IN	
	GND	
10-14B	YW DATA 2^7 OUT	
10-15B	YW DATA 2^5 OUT	
10-16B	YW DATA 2^3 OUT	
10-17B	YW DATA 2^1 OUT	
	GND	
12-19B	10-19B YW CK IN	
	GND	
12-15B	C PB SYNC OUT	
12-22A	Y DL SH IN	
12-23B	Y PB SYNC OUT	
132-3	SET UP CONTROL IN	
11-2B	R CLAMP IN	
MB-42, 3-11B	ADVANCED Y IN (X)	
MB-42, 3-9B	ADVANCED Y IN (G)	
133-2	6-28B R-Y/B-Y IN (G)	
133-1	6-29B R-Y/B-Y IN (X)	
	GND	

	B	
5-2B	R-Y OUT (G)	
5-3B	R-Y OUT (X)	
5-4B	B-Y OUT (G)	
5-5B	B-Y OUT (X)	
5-5A	Y OUT (G)	
5-6A	Y OUT (X)	
132-2	CHROMA CONTROL IN	
	GND	
11-9B	9-9B 1/2 R CK IN	
11-7B	9-7B R ZERO IN	
9-11B	YR DATA 2^7 IN	
9-12B	YR DATA 2^5 IN	
9-13B	YR DATA 2^3 IN	
9-14B	YR DATA 2^1 IN	
	GND	
9-16B	B-Y R DATA 2^7 IN	
9-17B	B-Y R DATA 2^5 IN	
9-18B	B-Y R DATA 2^3 IN	
9-19B	B-Y R DATA 2^1 IN	
	GND	
9-21B	R-Y R DATA 2^7 IN	
9-22B	R-Y R DATA 2^5 IN	
9-23B	R-Y R DATA 2^3 IN	
9-24B	R-Y R DATA 2^1 IN	
	GND	
+5V	+5V IN	
+12V	+12V IN	
+11V	REG +11V IN	
	GND	

RE-6 BOARD

CN115		
1	GND	1-1B
2	GND	
3		
4		
5	RECEIVE A IN	1-1B
6		
7	TRANSMIT A OUT	1-3B
8	RECEIVE B IN	1-2B
9		
10	TRANSMIT B OUT	1-4B
11	SYNCHRONIZE IN	3-10A
12		
13	L; CAPSTAN LOCK OUT	1-6B
14	TACH OUT	1-5B
15	SPEED B IN	1-8B
16	L; REVERCE IN	1-7B
17	L; PAUSE COMMAND IN	1-10B
18	SPEED A IN	1-9B
19	L; PLAY COMMAND IN	1-12B
20	L; SEARCH COMMAND IN	1-11B
21	L; FFWD COMMAND IN	1-14B
22	L; REW COMMAND IN	1-13B
23	L; EJECT COMMAND IN	1-16B
24	L; STOP COMMAND IN	1-15B
25	L; PAUSE STATUS-1 IN	1-18B
26	CTL PULSE OUT	1-17B
27	L; THREAD/UNTHREAD OUT	1-20B
28	L; PAUSE LAMP OUT	1-19B
29	L; REW STATUS OUT	1-22B
30	L; PLAY STATUS OUT	1-21B
31	L; STOP STATUS OUT	1-24B
32	L; F FWD STATUS OUT	1-23B
33	+5V OUT	+5V 1-23B
34		

MB-42 BOARD

CN119		
1	L; NORMAL FWD OUT	2-20B 6-7A 12-7A
2	H; TIME CODE MUTE OUT	2-20A
3	EDIT CTL OUT	2-28B 4-28A
4	TAPE ROLL PULSE OUT	2-23B 4-23A
5	H; F FWD CONTROL OUT	2-23A
6	H; AUDIO MUTE OUT	2-24A
7	TAPE DIRECTION (F/R) OUT	2-21A 4-17B 6-17A
8	H; S-REEL BRAKE OUT	2-29A
9	L; SLAVE DUB IN	5-24A
10	C-SWING PULSE OUT	3-4B
11	Y-SWING PULSE OUT	3-3B
12	H; T-REEL BRAKE OUT	2-30A
13	H; PINCH SOL DRIVE OUT	1-1A
14	H; MAIN SOL DRIVE OUT	1-2A
15	H; HUMID DET IN	1-3A
16	CONDENSATION SENSOR	123-5
17	H; TAPE BEGINNING IN	1-4A
18	S-REEL CURRENT IN	3-18A
19	H; TAPE END IN	1-5A
20	RF METER IN	129-1
21	S-REEL ERROR OUT	3-19A
22	H; UNTHREADING OUT	1-6A
23	NR SW GND	132-12
24	S-REEL DRIVE OUT	3-20A
25	H; THREADING OUT	1-7A
26	REEL GND	3-21A
27	NR ON/OFF OUT	132-8
28	H; CASSETTE UP OUT	1-8A
29	T-REEL CURRENT IN	3-22A
30	H; CASSETTE DOWN OUT	1-9A
31	T-REEL ERROR OUT	3-23A
32	T-REEL DRIVE OUT	3-24A
33	H; TC BUSY IN	1-11A

PR-48

CN 8

	B		A		
	GND	1	GND		
-11V	REG -11V IN	2	REG -11V IN		-11V
		3			
-12V	-12V IN	4	-12V IN		-12V
-5V	REG -5V IN	5	REG -5V IN		-5V
12-6B	CLAMP OFF IN	6	NORM/BID IN	10-6A	12-6A
10-7B	CW DATA 2^7 OUT	7	CW DATA 2^6 OUT	10-7A	
10-8B	CW DATA 2^5 OUT	8	CW DATA 2^4 OUT	10-8A	
10-9B	CW DATA 2^3 OUT	9	CW DATA 2^2 OUT	10-9A	
10-10B	CW DATA 2^1 OUT	10	CW DATA 2^0 OUT	10-10A	
	GND	11	GND		
12-12B	10-12B	CW CK IN	12		
	GND	13	GND		
10-14B	YW DATA 2^7 OUT	14	YW DATA 2^6 OUT	10-14A	
10-15B	YW DATA 2^5 OUT	15	YW DATA 2^4 OUT	10-15A	
10-16B	YW DATA 2^3 OUT	16	YW DATA 2^2 OUT	10-16A	
10-17B	YW DATA 2^1 OUT	17	YW DATA 2^0 OUT	10-17A	
	GND	18			
12-19B	10-19B	YW CK IN	19		
	GND	20	PB V OUT	10-20A	
12-15B	C PB SYNC OUT	21	CS DO IN	10-21A	12-15A
12-22A	Y DL SH IN	22	YS DO IN	10-22A	12-23A
12-23B	Y PB SYNC OUT	23	DELAY'ED TDM C IN (X)	MB-42, 5-9B	
132-3	SET UP CONTROL IN	24	DELAY'ED TDM C IN (G)	MB-42, 5-10B	
11-2B	R CLAMP IN	25	CW CLAMP IN	12-14A	
MB-42, 3-11B	ADVANCED Y IN (X)	26	Y IN (G)	4-8B	133-4
MB-42, 3-9B	ADVANCED Y IN (G)	27	Y IN (X)	4-7B	133-3
133-2	6-28B	R-Y/B-Y IN (G)	28	R-Y/B-Y IN (G)	6-28B 133-2
133-1	6-29B	R-Y/B-Y IN (X)	29	R-Y/B-Y IN (X)	6-29B 133-1
	GND	30	GND		

CN 7

	B		A		
5-2B	R-Y OUT (G)	1	R-Y OUT (G)	5-2B	
5-3B	R-Y OUT (X)	2	R-Y OUT (X)	5-3B	
5-4B	B-Y OUT (G)	3	B-Y OUT (G)	5-4B	
5-5B	B-Y OUT (X)	4	B-Y OUT (X)	5-5B	
5-5A	Y OUT (G)	5	Y OUT (G)	5-5A	
5-6A	Y OUT (X)	6	Y OUT (X)	5-6A	
132-2	CHROMA CONTROL IN	7	VIDEO CONTROL IN	132-1	
	GND	8	GND		
11-9B	9-9B	1/2 R CK IN	9	DL R CK IN	9-7A
11-7B	9-7B	R ZERO IN	10	CR DO IN	6-23B 9-10A
9-11B	YR DATA 2^7 IN	11	YR DATA 2^6 IN	9-11A	
9-12B	YR DATA 2^5 IN	12	YR DATA 2^4 IN	9-12A	
9-13B	YR DATA 2^3 IN	13	YR DATA 2^2 IN	9-13A	
9-14B	YR DATA 2^1 IN	14	YR DATA 2^0 IN	9-14A	
	GND	15	GND		
9-16B	B-Y R DATA 2^7 IN	16	B-Y R DATA 2^6 IN	9-16A	
9-17B	B-Y R DATA 2^5 IN	17	B-Y R DATA 2^4 IN	9-17A	
9-18B	B-Y R DATA 2^3 IN	18	B-Y R DATA 2^2 IN	9-18A	
9-19B	B-Y R DATA 2^1 IN	19	B-Y R DATA 2^0 IN	9-19A	
	GND	20	GND		
9-21B	R-Y R DATA 2^7 IN	21	R-Y R DATA 2^6 IN	9-21A	
9-22B	R-Y R DATA 2^5 IN	22	R-Y R DATA 2^4 IN	9-22A	
9-23B	R-Y R DATA 2^3 IN	23	R-Y R DATA 2^2 IN	9-23A	
9-24B	R-Y R DATA 2^1 IN	24	R-Y R DATA 2^0 IN	9-24A	
	GND	25	GND		
+5V	+5V IN	26	+5V IN		+5V
		27			
+12V	+12V IN	28	+12V IN		+12V
+11V	REG +11V IN	29	REG +11V IN		+11V
	GND	30	GND		

MY-17

CN 10

	B		A		
	GND	1	GND		
-11V	REG -11V IN	2	REG -11V IN		-11V
		3			
-12V	-12V IN	4	-12V IN		-12V
-5V	REG -5V IN	5	REG -5V IN		-5V
		6	NORM/BID IN	8-6A	12-6A
8-7B	CW DATA 2^7 IN	7	CW DATA 2^6 IN	8-7A	
8-8B	CW DATA 2^5 IN	8	CW DATA 2^4 IN	8-8A	
8-9B	CW DATA 2^3 IN	9	CW DATA 2^2 IN	8-9A	
8-10B	CW DATA 2^1 IN	10	CW DATA 2^0 IN	8-10A	
	GND	11	GND		
12-12B	8-12B	CW CK IN	12	CW ZERO IN	12-12A
	GND	13	GND		
8-14B	YW DATA 2^7 IN	14	YW DATA 2^6 IN	8-14A	
8-15B	YW DATA 2^5 IN	15	YW DATA 2^4 IN	8-15A	
8-16B	YW DATA 2^3 IN	16	YW DATA 2^2 IN	8-16A	
8-17B	YW DATA 2^1 IN	17	YW DATA 2^0 IN	8-17A	
	GND	18	GND		
12-19B	8-19B	YW CK IN	19	YW ZERO IN	12-19A
	GND	20	PB V IN	8-20A	
12-21B	Y COUNT CK IN	21	CS DO OUT	8-21A	12-15A
12-22B	FRB IN	22	YS DO OUT	8-22A	12-23A
12-24B		23	C-DROPOUT DET PULSE	6-16A	133-7
		24	Y-DROPOUT DET PULSE	6-25B	133-5
		25	Y COUNT H IN	12-17A	
		26		12-16A	
		27			
		28			
		29			
	GND	30	GND		

CN 9

	B		A		
	GND	1	GND		
		2			
		3	FH IN	11-3A	
		4	HD IN	11-4A	5-7A
11-5B	YD BLKG IN	5	VD IN	11-5A	5-5A
		6	F O/E IN	11-6A	6-23A
11-7B	7-10B	R ZERO IN	7	DL R CK OUT	7-9A
	GND	8	GND		
11-9B	7-9B	1/2 R CK IN	9	R CK IN	11-9A
			10	CR DO OUT	6-23B 7-10A
7-11B	YR DATA 2^7 OUT	11	YR DATA 2^6 OUT	7-11A	
7-12B	YR DATA 2^5 OUT	12	YR DATA 2^4 OUT	7-12A	
7-13B	YR DATA 2^3 OUT	13	YR DATA 2^2 OUT	7-13A	
7-14B	YR DATA 2^1 OUT	14	YR DATA 2^0 OUT	7-14A	
	GND	15	GND		
7-16B	B-Y R DATA 2^7 OUT	16	B-Y R DATA 2^6 OUT	7-16A	
7-17B	B-Y R DATA 2^5 OUT	17	B-Y R DATA 2^4 OUT	7-17A	
7-18B	B-Y R DATA 2^3 OUT	18	B-Y R DATA 2^2 OUT	7-18A	
7-19B	B-Y R DATA 2^1 OUT	19	B-Y R DATA 2^0 OUT	7-19A	
	GND	20	GND		
7-21B	R-Y R DATA 2^7 OUT	21	R-Y R DATA 2^6 OUT	7-21A	
7-22B	R-Y R DATA 2^5 OUT	22	R-Y R DATA 2^4 OUT	7-22A	
7-23B	R-Y R DATA 2^3 OUT	23	R-Y R DATA 2^2 OUT	7-23A	
7-24B	R-Y R DATA 2^1 OUT	24	R-Y R DATA 2^0 OUT	7-24A	
	GND	25	GND		
+5V	+5V IN	26	+5V IN		+5V
		27			
		28			
+11V	REG +11V IN	29	REG +11V IN		+11V
	GND	30	GND		

CK-14

CN 12

	B		A		
	GND	1	GND		
-11V	REG -11V IN	2	REG -11V IN		-11V
		3			
-12V	-12V IN	4	-12V IN		-12V
-5V	REG -5V IN	5	REG -5V IN		-5V
8-6B	CLAMP OFF OUT	6	NORM/BID OUT	8-6A	10-6A
		7	L;NORMAL FWD IN	2-20B	6-7A 119-1
		8			
		9			
		10			
	GND	11	GND		
10-12B	8-12B	CW CK OUT	12	CW ZERO OUT	10-12A
	GND	13	GND		
		14	CW CLAMP OUT	8-25A	
8-21B	C PB SYNC IN	15	CS DO IN	8-21A	10-21A
		16		10-26A	
		17	Y COUNT H OUT	10-25A	
	GND	18	GND		
10-19B	8-19B	YW CK OUT	19	YW ZERO OUT	10-19A
	GND	20	GND		
10-21B	Y COUNT CK OUT	21			
10-22B	FRB OUT	22	Y DL SH OUT	8-22B	
8-23B	Y PB SYNC IN	23	YS DO IN	8-22A	10-22A
10-23B		24			
		25			
		26			
		27			
		28			
132-4	Y/C DELAY CONTROL IN	29	Y/C DELAY CONTROL IN	132-4	
	GND	30	GND		

CN 11

	B		A		
	GND	1	GND		
8-25B	R CLAMP OUT	2	BF OUT	5-1B	
		3	FH OUT	9-3A	
5-1A	C BLKG OUT	4	HD OUT	9-4A	5-7A
9-5B	YD BLKG OUT	5	VD OUT	9-5A	5-5A
6-10B	C-CLAMP INH OUT	6	F O/E OUT	9-6A	6-23A
9-7B	7-10B	R ZERO OUT	7	+V/-V OUT	5-4A
	GND	8	GND		
9-9B	7-9B	1/2 R CK OUT	9	R CK OUT	7-9A 9-9A
			10		
3-19B	5-19A	CF PULSE OUT (PAL)	11		
			12		
			13	INT/EXT OUT	5-12A
			14	BG OUT	5-12B
6-15B		1st FIELD PULSE OUT	15	REF. SYNC OUT	4-23B 5-13B
			16		
6-25A		H; IN PHASE IN	17		
			18		
	GND	19	GND		
5-10B		4fsc (+) IN	20	4fsc (-) IN	5-10A
	GND	21	GND		
132-5		SYNC PHASE CONTROL IN	22	SYNC PHASE CONTROL IN	132-5
114-10	5-14B	REF VIDEO IN (G)	23	REF VIDEO IN (G)	5-14B 114-10
114-9	5-15B	REF VIDEO IN (X)	24	REF VIDEO IN (X)	5-15B 114-9
			25		
+5V	+5V IN	26	+5V IN		+5V
		27			
		28			
+11V	REG +11V IN	29	REG +11V IN		+11V
	GND	30	GND		

CN 123 — HE-5 BOARD

+12V	+12V OUT	1
		2
	GND	3

CN 124 — CH-10 BOARD

4-13A	CTL HEAD (Y)	1
4-12A	CTL HEAD (G)	2
4-14A	CTL HEAD (X)	3

CN 125 — DRUM ASS'Y

4-10A	DRUM SPEED PG (A) IN	1
4-9A	DRUM SPEED PG (B) IN	2
4-8A	DRUM PHASE PG IN	3
4-11A	GND	4
119-16	CONDENSATION SENSOR	5

CN 126 — DRUM ASS'Y

3-1A	DRUM MOTOR VCC OUT	1
3-3A	DRUM ERROR OUT	2
3-4A	DRUM GND	3

CN 127 — TE-2 BOARD

	GND	1
2-16B	PH INTERRUPTOR (+) OUT	2
2-15B	PH INTERRUPTOR (+) OUT	3
2-14B	L;THREAD/UNTHREAD END IN	4
2-13B	L;THREAD END IN	5
	GND	6

CN 128 — DE-12 BOARD

3-9A	REEL FG VCC OUT	1
		2
3-8A	S-REEL FG-1 IN	3
3-7A	S-REEL FG-2 IN	4
3-6A	S-REEL FG GND	5
3-7B	T-REEL FG GND	6
3-8B	T-REEL FG-2 IN	7
3-9B	T-REEL FG-1 IN	8

CN 129 — CP-52 BOARD

119-20	RF METER OUT	1
4-15B	TRACKING VR IN	2
4-14B	GND	3
4-16B	TRACKING VR (+) OUT	4
2-16A	H;REMOTE-1 IN	5
2-15A	H;REMOTE-2 IN	6
2-14A	AUTO OFF LAMP (-) OUT	7
	GND	8

CN 131 — HOURS METER

1-10A	HOURS METER (+) OUT	1
		2
	GND	3

CN 132 — ST-22 BOARD

	7-7A	VIDEO CONTROL IN	1
	7-7B	CHROMA CONTROL IN	2
	8-24B	SET UP CONTROL IN	3
12-29B	12-29A	Y/C DELAY CONTROL IN	4
11-22B	11-22A	SYNC PHASE CONTROL IN	5
	5-6A	SC PHASE CONTROL IN	6
	6-28A	HUE CONTROL IN (NTSC)	7
	119-27	NR ON/OFF IN	8
+5V		+5V OUT	9
		GND	10
-5V		REG -5V OUT	11
	119-23	NR SW GND	12

CN 133 — MB-42 BOARD

8-29B	8-29A	6-29B	R-Y/B-Y IN (X)	1
8-28B	8-28A	6-28B	R-Y/B-Y IN (G)	2
	8-27A	4-7B	DEMOD'ED Y IN (X)	3
	8-26A	4-8B	DEMOD'ED Y IN (G)	4
	10-24A	6-25B	Y-DROPOUT DET PULSE IN (X)	5
		6-24B	Y-DROPOUT DET PULSE IN (G)	6
	10-23A	6-16A	C-DROPOUT DET PULSE IN (X)	7
	6-15A	6-22B	C-DROPOUT DET PULSE IN (G)	8
			DEMOD'ED R-Y/B-Y IN (X)	9
			DEMOD'ED R-Y/B-Y IN (G)	10

16	CONDENSATION SENSOR	123-5
17	H; TAPE BEGINNING IN	1-4A
18	S-REEL CURRENT IN	3-18A
19	H; TAPE END IN	1-5A
20	RF METER IN	129-1
21	S-REEL ERROR OUT	3-19A
22	H; UNTHREADING OUT	1-6A
23	NR SW GND	132-12
24	S-REEL DRIVE OUT	3-20A
25	H; THREADING OUT	1-7A
26	REEL GND	3-21A
27	NR ON/OFF OUT	132-8
28	H; CASSETTE UP OUT	1-8A
29	T-REEL CURRENT IN	3-22A
30	H; CASSETTE DOWN OUT	1-9A
31	T-REEL ERROR OUT	3-23A
32	T-REEL DRIVE OUT	3-24A
33	H; TC BUSY IN	1-11A
34		
35	TC DATA OUTPUT SELECT IN	1-12A
36	TIME CODE ADDRESS 3 OUT	1-13A
37	TIME CODE ADDRESS 2 OUT	1-14A
38		
39	TIME CODE ADDRESS 1 OUT	1-15A
40	TIME CODE ADDRESS 0 OUT	1-16A
41	TIME CODE DATA 7 IN	1-17A
42		
43	TIME CODE DATA 6 IN	1-18A
44	TIME CODE DATA 5 IN	1-19A
45	TIME CODE DATA 4 IN	1-20A
46		
47	TIME CODE DATA 3 IN	1-21A
48	TIME CODE DATA 2 IN	1-22A
49	TIME CODE DATA 1 IN	1-23A
50	TIME CODE DATA 0 IN	1-24A

MB-42 BOARD

CN30 — KY-32 BOARD

1	+5V OUT	
2	+5V OUT	
3	+5V OUT	
4	SERIAL DATA 1 OUT	2-8B
5	SYSTEM CLOCK 1 OUT	2-8A
6	STROBE CLOCK 1 OUT	2-7A
7	SERIAL DATA 1 IN	2-7B
8	SERIAL CLOCK OUT	2-9A
9	DISPLAY START OUT	2-10A
10	DISPLAY DATA 3 OUT	2-9B
11	DISPLAY DATA 2 OUT	2-10B
12	DISPLAY DATA 1 OUT	2-11B
13	DISPLAY DATA 0 OUT	2-12B
14	GND	
15	GND	
16	GND	

MB-41

1-608-579-12,13
BVW-10
BVW-10P

MB-41 (MOTHER BOARD)

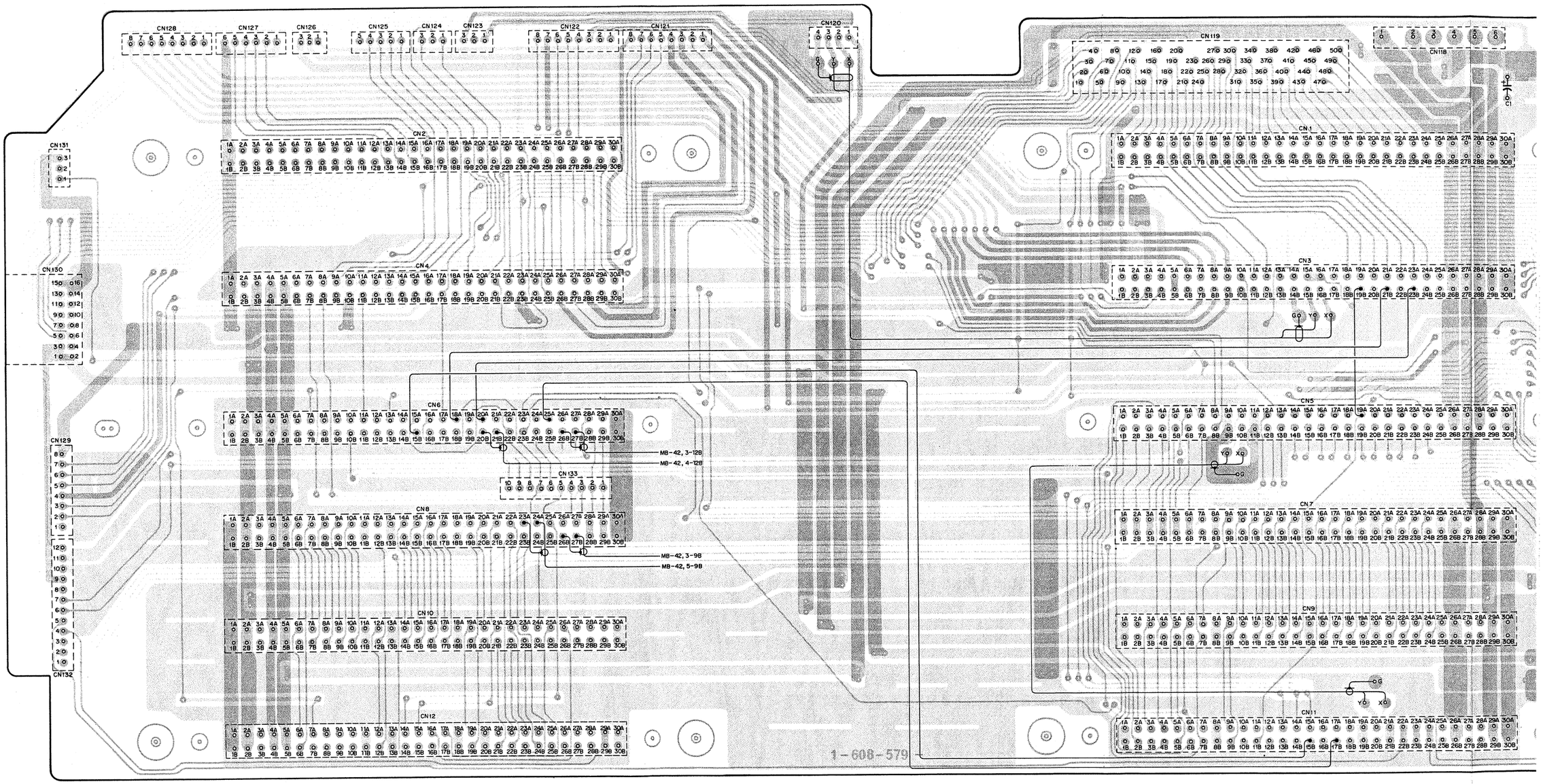

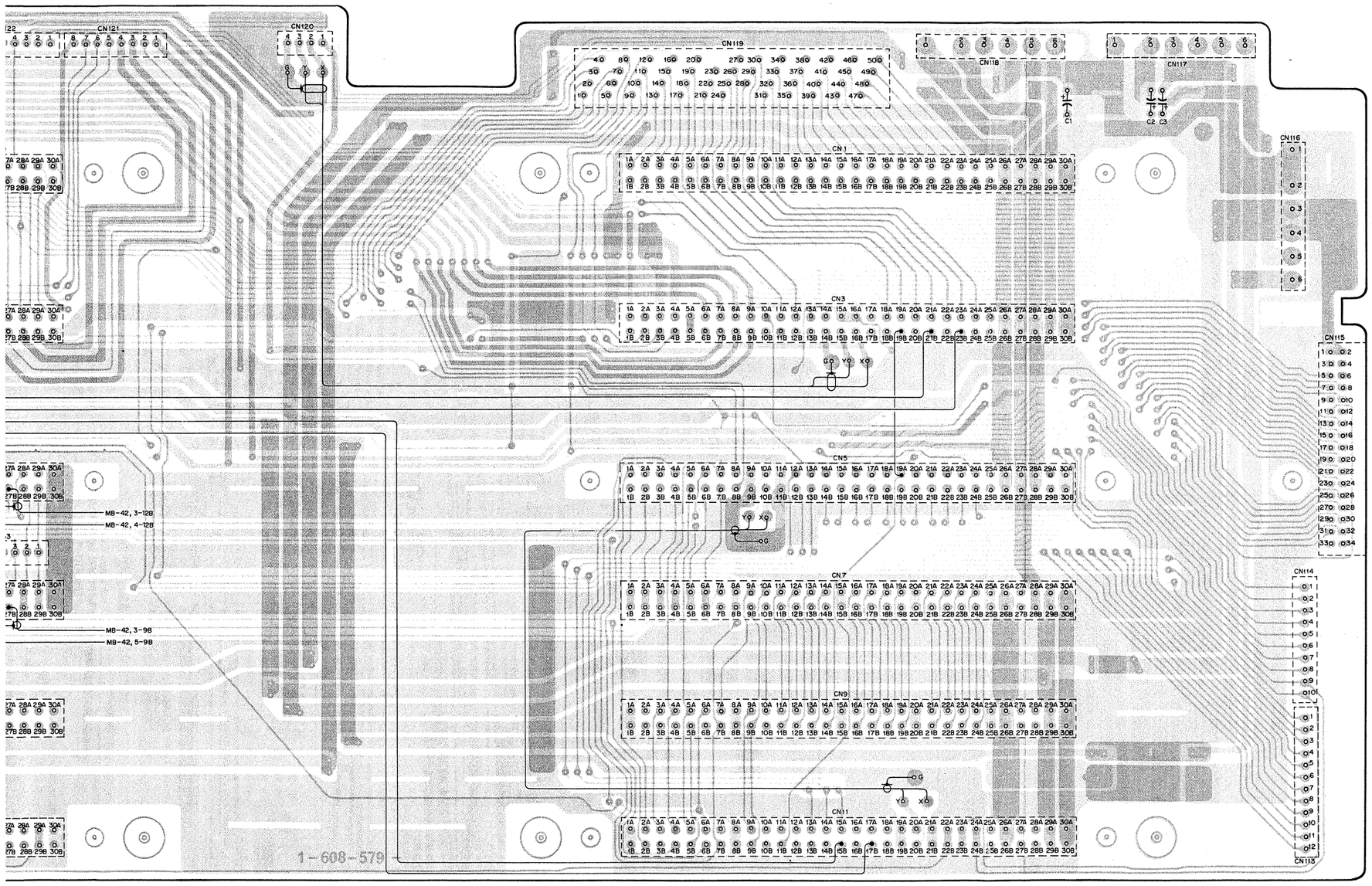

MB-41 -SOLDERING SIDE-

1-608-579-12,13
BVW-10
BVW-10P

MB-42 (MOTHER BOARD)

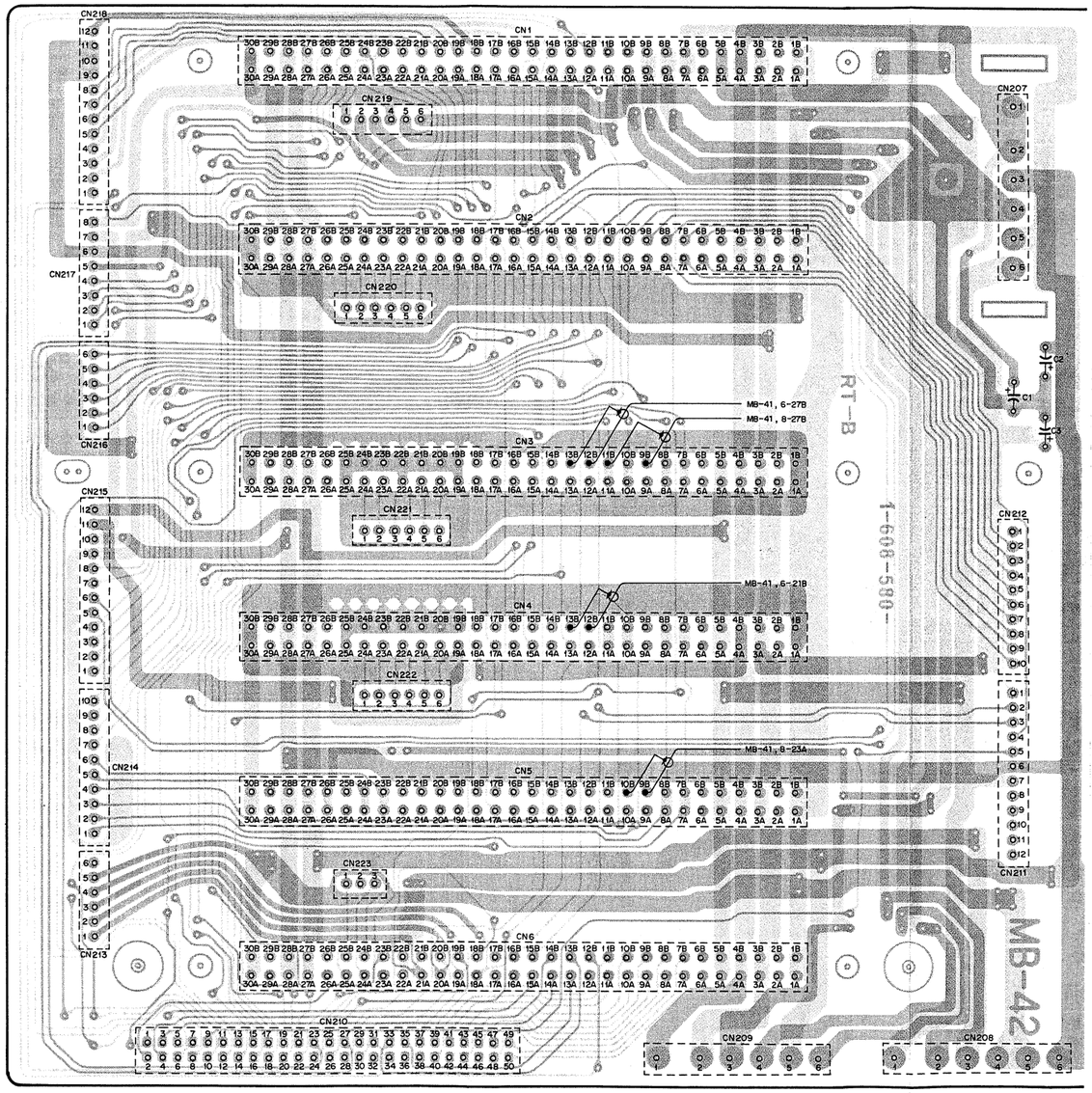

MB-42 - SOLDERING SIDE -

1-608-580-12, 13
BVW-10
BVW-10P

MB-42 (MOTHER BOARD)

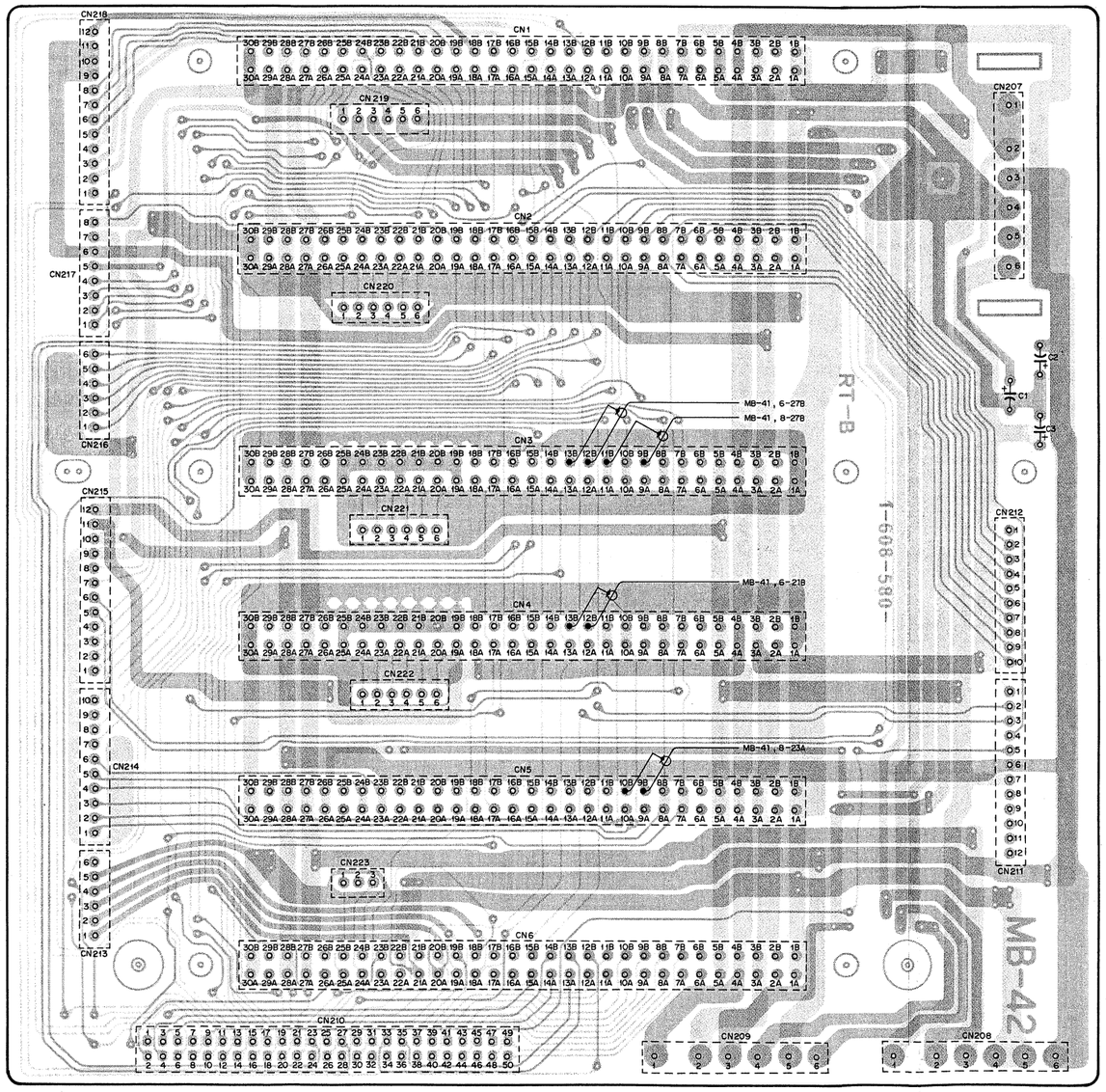

MB-42 - SOLDERING SIDE -
1-608-580-12, 13
BVW-10
BVW-10P

MB-42 (MOTHER BOARD)

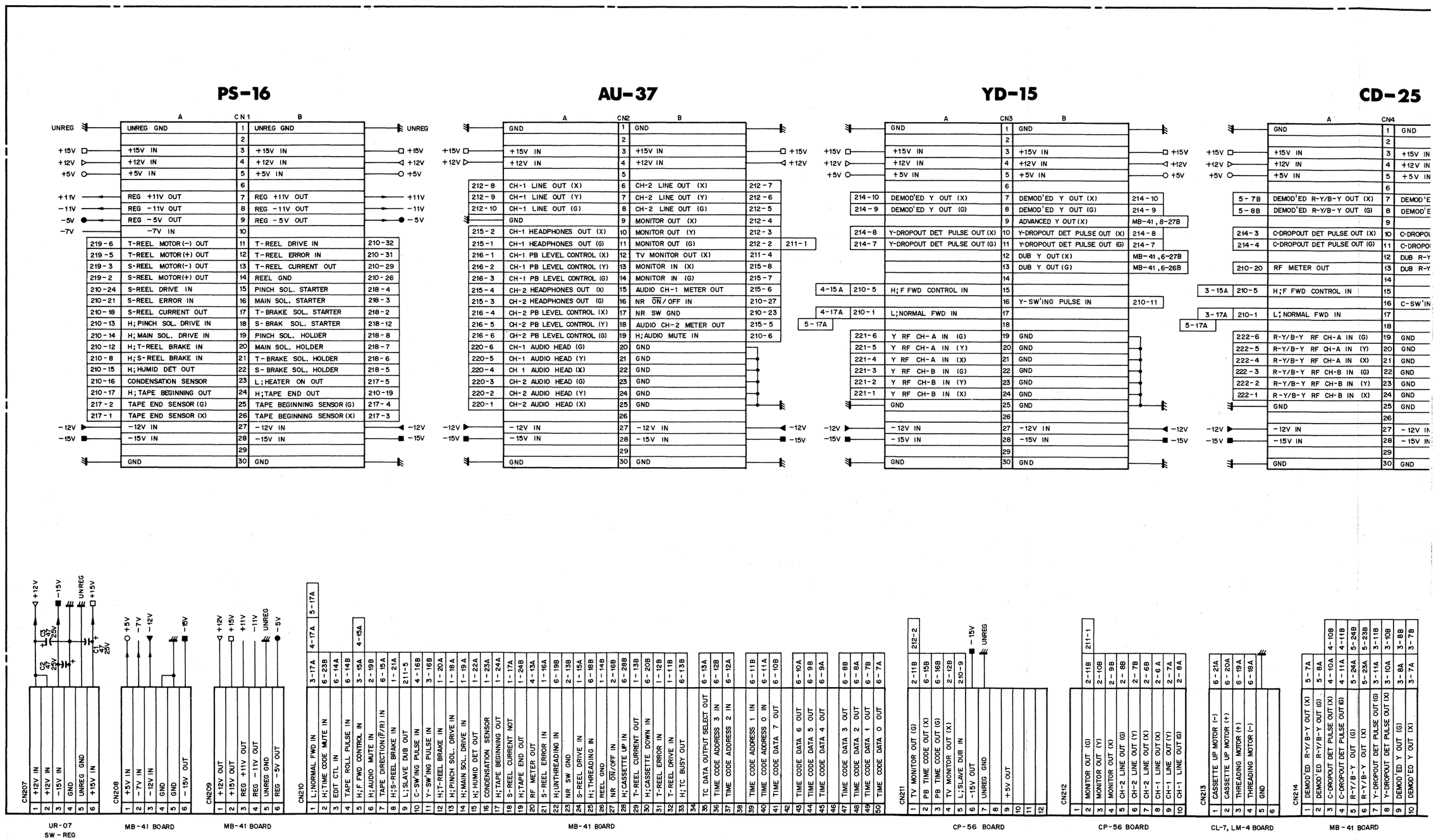

CD-25

A	CN4	B		Line
	1	GND		GND
	2			
	3	+15V IN		+15V
	4	+12V IN		+12V
	5	+5V IN		+5V
	6			
R-Y/B-Y OUT (X)	7	DEMOD'ED R-Y/B-Y OUT(X)	5-7B	
R-Y/B-Y OUT (G)	8	DEMOD'ED R-Y/B-Y OUT(G)	5-8B	
	9			
DET PULSE OUT (X)	10	C-DROPOUT DET PULSE OUT(X)	214-3	
DET PULSE OUT (G)	11	C-DROPOUT DET PULSE OUT(G)	214-4	
	12	DUB R-Y/B-Y OUT(X)	MB-41, 6-21B	
R OUT	13	DUB R-Y/B-Y OUT(G)	MB-41, 6-20B	
	14			
CONTROL IN	15			
	16	C-SW'ING PULSE IN	210-10	
. FWD IN	17			
	18			
RF CH-A IN (G)	19	GND		
RF CH-A IN (Y)	20	GND		
RF CH-A IN (X)	21	GND		
RF CH-B IN (G)	22	GND		
RF CH-B IN (Y)	23	GND		
RF CH-B IN (X)	24	GND		
	25	GND		GND
	26			
	27	-12V IN		-12V
	28	-15V IN		-15V
	29			
	30	GND		GND

CF-12

Line			A	CN5	B		
GND			GND	1	GND		GND
				2			
+15V			+15V IN	3	+15V IN		+15V
+12V			+12V IN	4	+12V IN		+12V
+5V			+5V IN	5	+5V IN		+5V
				6			
		214-1	DEMOD'ED R-Y/B-Y OUT (X)	7	DEMOD'ED R-Y/B-Y IN (X)	4-7A	4-7B
		214-2	DEMOD'ED R-Y/B-Y OUT (G)	8	DEMOD'ED R-Y/B-Y IN (G)	4-8A	4-8B
				9	DELAY'ED TDM C OUT (X)	MB-41, 8-23A	
				10	DELAY'ED TDM C OUT (G)	MB-41, 8-24A	
				11			
				12			
				13			
				14			
				15			
				16			
	3-17A	210-1	L;NORMAL FWD IN	17			
	4-17A			18			
				19			
				20			
				21			
				22			
		214-6	R-Y/B-Y OUT (X)	23	R-Y/B-Y OUT (X)	214-6	
		214-5	R-Y/B-Y OUT (G)	24	R-Y/B-Y OUT (G)	214-5	
				25			
-11V			REG -11V IN	26	REG -11V IN		-11V
-12V			-12V IN	27	-12V IN		-12V
-15V			-15V IN	28	-15V IN		-15V
				29			
GND			GND	30	GND		GND

TC-25

Line		A	CN6	B		Line
GND		GND	1	GND		GND
			2			
+15V		+15V IN	3	+15V IN		+15V
+12V		+12V IN	4	+12V IN		+12V
+5V		+5V IN	5	+5V IN		+5V
			6			
	210-50	TIME CODE DATA 0 OUT	7	TIME CODE DATA 1 OUT	210-49	
	210-48	TIME CODE DATA 2 OUT	8	TIME CODE DATA 3 OUT	210-47	
	210-45	TIME CODE DATA 4 OUT	9	TIME CODE DATA 5 OUT	210-44	
	210-43	TIME CODE DATA 6 OUT	10	TIME CODE DATA 7 OUT	210-41	
	210-40	TIME CODE ADDRESS 0 IN	11	TIME CODE ADDRESS 1 IN	210-39	
	210-37	TIME CODE ADDRESS 2 IN	12	TIME CODE ADDRESS 3 IN	210-36	
	210-35	TC DATA OUTPUT SELECT OUT	13	H;TC BUSY OUT	210-33	
	210-3	EDIT CTL IN	14	TAPE ROLL PULSE IN	210-4	
	210-7	TAPE DIRECTION (F̄/R) IN	15	PB TIME CODE OUT (X)	211-2	
			16	PB TIME CODE OUT (G)	211-3	
			17			
	213-4	THREADING MOTOR (-)	18	H; THREADING IN	210-25	
	213-3	THREADING MOTOR (+)	19	H; UNTHREADING IN	210-22	
	213-2	CASSETTE UP MOTOR (+)	20	H; CASSETTE DOWN IN	210-30	
	213-1	CASSETTE UP MOTOR (-)	21	H; CASSETTE UP IN	210-28	
UNREG		UNREG GND	22	UNREG GND		UNREG
			23	H; TIME CODE MUTE IN	210-2	
	223-3	TIME CODE HEAD (X)	24	TIME CODE HEAD (Y)	223-2	
	223-1	TIME CODE HEAD (G)	25			
			26			
-12V		-12V IN	27	-12V IN		-12V
-15V		-15V IN	28	-15V IN		-15V
			29			
GND		GND	30	GND		GND

MB-42

1-608-580-12,13
BVW-10
BVW-10P

MB-41 BOARD

Pin	Signal		
1	DEMOD'ED R-Y/B-Y OUT (X)	5-7A	
2	DEMOD'ED R-Y/B-Y OUT (G)	5-8A	
3	C-DROPOUT DET PULSE OUT (X)	4-10A	4-10B
4	C-DROPOUT DET PULSE OUT (G)	4-11A	4-11B
5	R-Y/B-Y OUT (G)	5-24A	5-24B
6	R-Y/B-Y OUT (X)	5-23A	5-23B
7	Y-DROPOUT DET PULSE OUT (G)	3-11A	3-11B
8	Y-DROPOUT DET PULSE OUT (X)	3-10A	3-10B
9	DEMOD'ED Y OUT (G)	3-8A	3-8B
10	DEMOD'ED Y OUT (X)	3-7A	3-7B

CN215 — CP-52 BOARD

Pin	Signal	
1	CH-1 HEADPHONES OUT (G)	2-11A
2	CH-1 HEADPHONES OUT (X)	2-10A
3	CH-2 HEADPHONES OUT (G)	2-16A
4	CH-2 HEADPHONES OUT (X)	2-15A
5	AUDIO CH-2 METER OUT	2-18B
6	AUDIO CH-1 METER OUT	2-15B
7	MONITOR IN (G)	2-14B
8	MONITOR IN (X)	2-13B
9	GND	
10	-15V OUT	-15V
11	+12V OUT	+12V
12	+5V OUT	+5V

CN216 — CP-52 BOARD

Pin	Signal	
1	CH-1 PB LEVEL CONTROL (X)	2-12A
2	CH-1 PB LEVEL CONTROL (Y)	2-13A
3	CH-1 PB LEVEL CONTROL (G)	2-14A
4	CH-2 PB LEVEL CONTROL (X)	2-17A
5	CH-2 PB LEVEL CONTROL (Y)	2-18A
6	CH-2 PB LEVEL CONTROL (G)	2-19A

CN217 — HE-5, DE-12, CL-7 BOARD

Pin	Signal	
1	TAPE END SENSOR (X)	1-26A
2	TAPE END SENSOR (G)	1-25A
3	TAPE BEGINNING SENSOR (X)	1-26B
4	TAPE BEGINNING SENSOR (G)	1-25B
5	L;HEATER ON OUT	1-23B
6	+15V OUT	
7	+12V OUT	
8	GND	

CN218 — DE-12, PD-20 BOARD

Pin	Signal	
1		
2	T-BRAKE SOL. STARTER	1-17B
3	MAIN SOL. STARTER	1-16B
4	PINCH SOL. STARTER	1-15B
5	S-BRAKE SOL. HOLDER	1-22B
6	T-BRAKE SOL. HOLDER	1-21B
7	MAIN SOL. HOLDER	1-20B
8	PINCH SOL. HOLDER	1-19B
9	+15V OUT	
10	+15V OUT	+15V
11	+15V OUT	
12	S-BRAKE SOL. STARTER	1-18B

CN219 — REEL MOTOR

Pin	Signal	
1	GND	
2	S-REEL MOTOR (+) OUT	1-14A
3	S-REEL MOTOR (-) OUT	1-13A
4	GND	
5	T-REEL MOTOR (+) OUT	1-12A
6	T-REEL MOTOR (-) OUT	1-11A

CN220 — AH-9 BOARD

Pin	Signal	
1	CH-2 AUDIO HEAD (X)	2-25A
2	CH-2 AUDIO HEAD (Y)	2-24A
3	CH-2 AUDIO HEAD (G)	2-23A
4	CH-1 AUDIO HEAD (X)	2-22A
5	CH-1 AUDIO HEAD (Y)	2-21A
6	CH-1 AUDIO HEAD (G)	2-20A

CN221 — DRUM ASS'Y

Pin	Signal	
1	Y RF CH-B IN (X)	3-24A
2	Y RF CH-B IN (Y)	3-23A
3	Y RF CH-B IN (G)	3-22A
4	Y RF CH-A IN (X)	3-21A
5	Y RF CH-A IN (Y)	3-20A
6	Y RF CH-A IN (G)	3-19A

CN222 — DRUM ASS'Y

Pin	Signal	
1	R-Y/B-Y RF CH-B IN (X)	4-24A
2	R-Y/B-Y RF CH-B IN (Y)	4-23A
3	R-Y/B-Y RF CH-B IN (G)	4-22A
4	R-Y/B-Y RF CH-A IN (X)	4-21A
5	R-Y/B-Y RF CH-A IN (Y)	4-20A
6	R-Y/B-Y RF CH-A IN (G)	4-19A

CN223 — AH-9 BOARD

Pin	Signal	
1	TIME CODE HEAD (G)	6-25A
2	TIME CODE HEAD (Y)	6-24B
3	TIME CODE HEAD (X)	6-24A

FRAME (1/2)

FRAME (1/2)

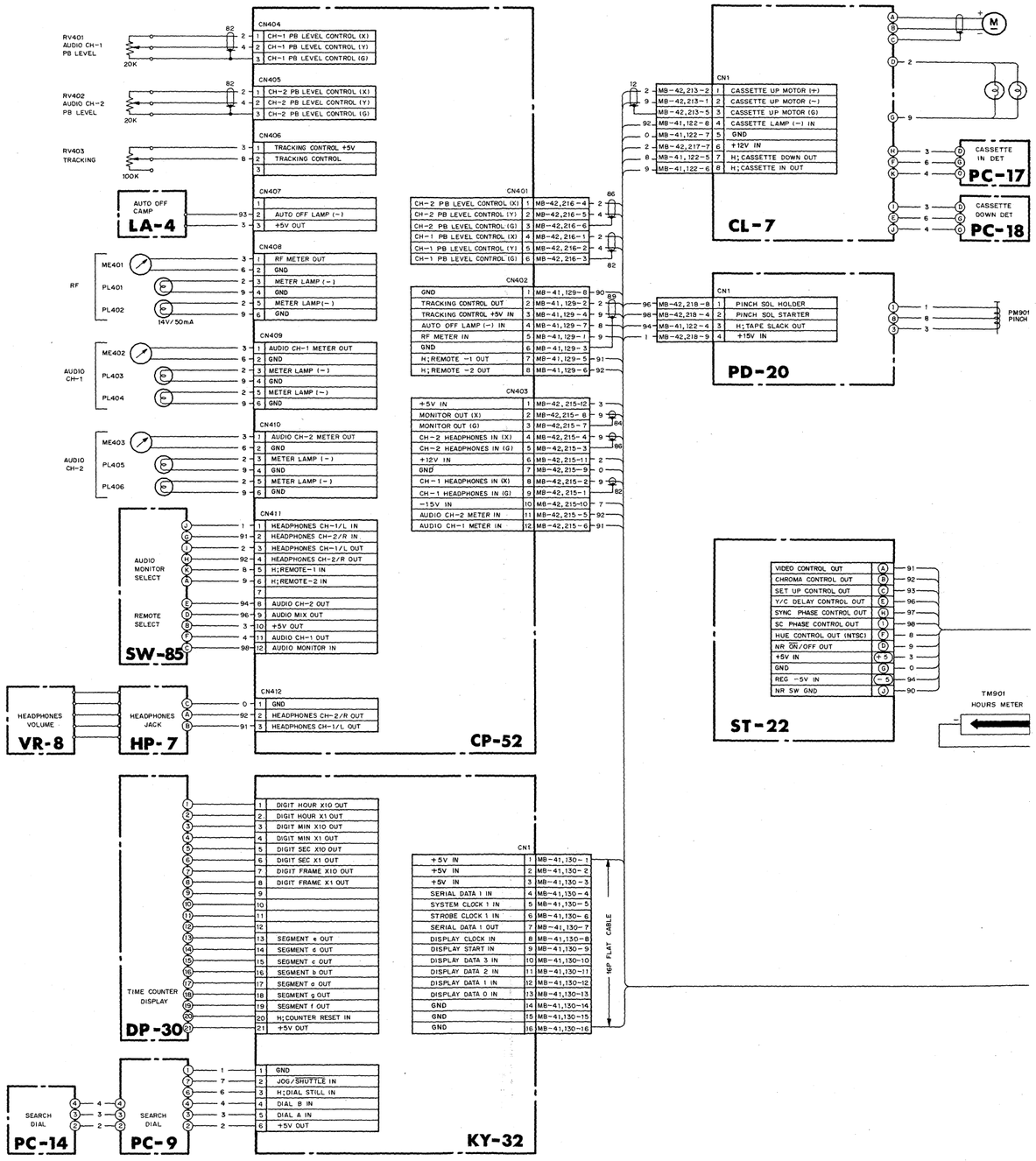

FRAME (2/2)

FRAME (2/2)

WIRING (2/2)

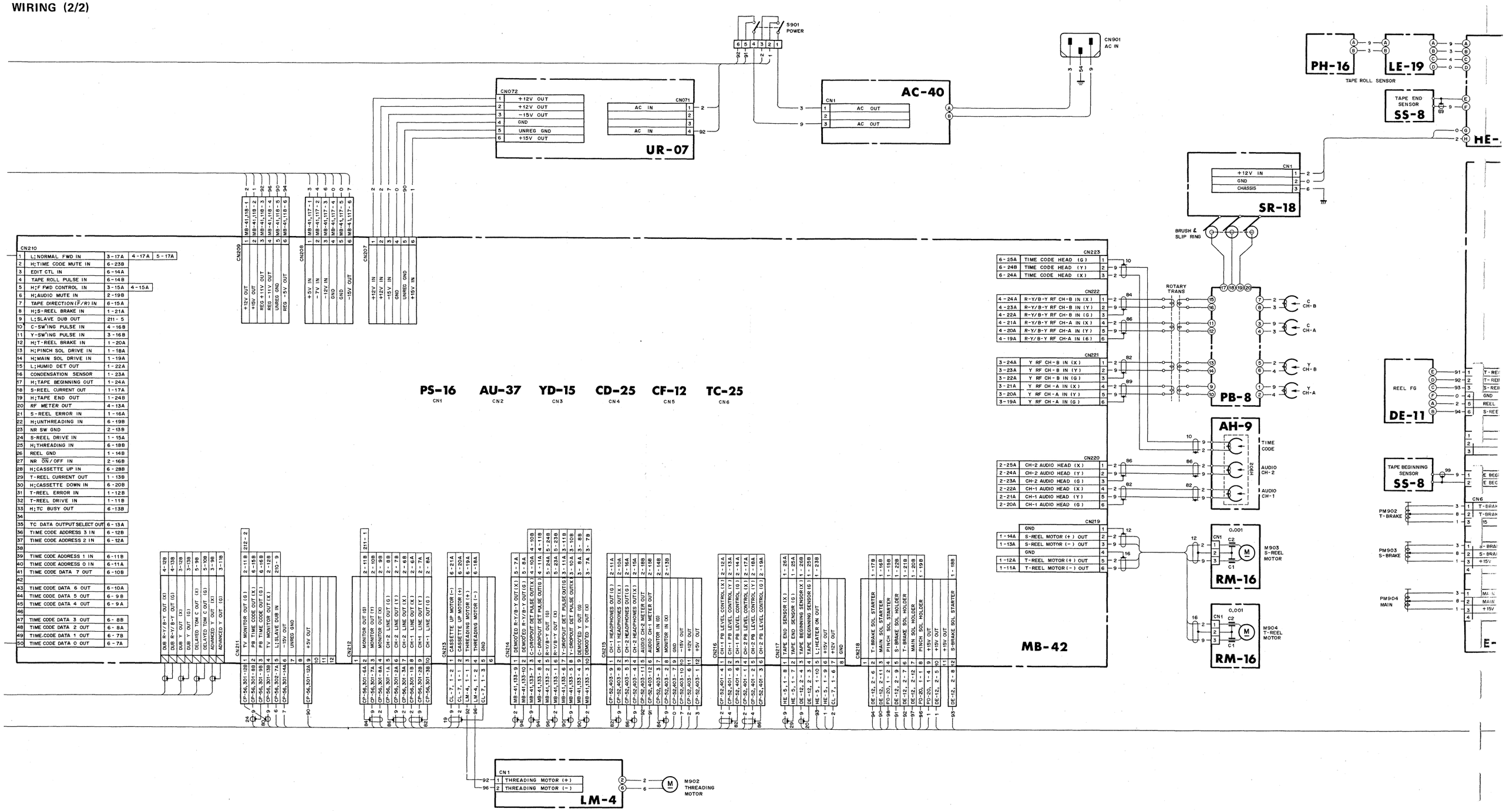

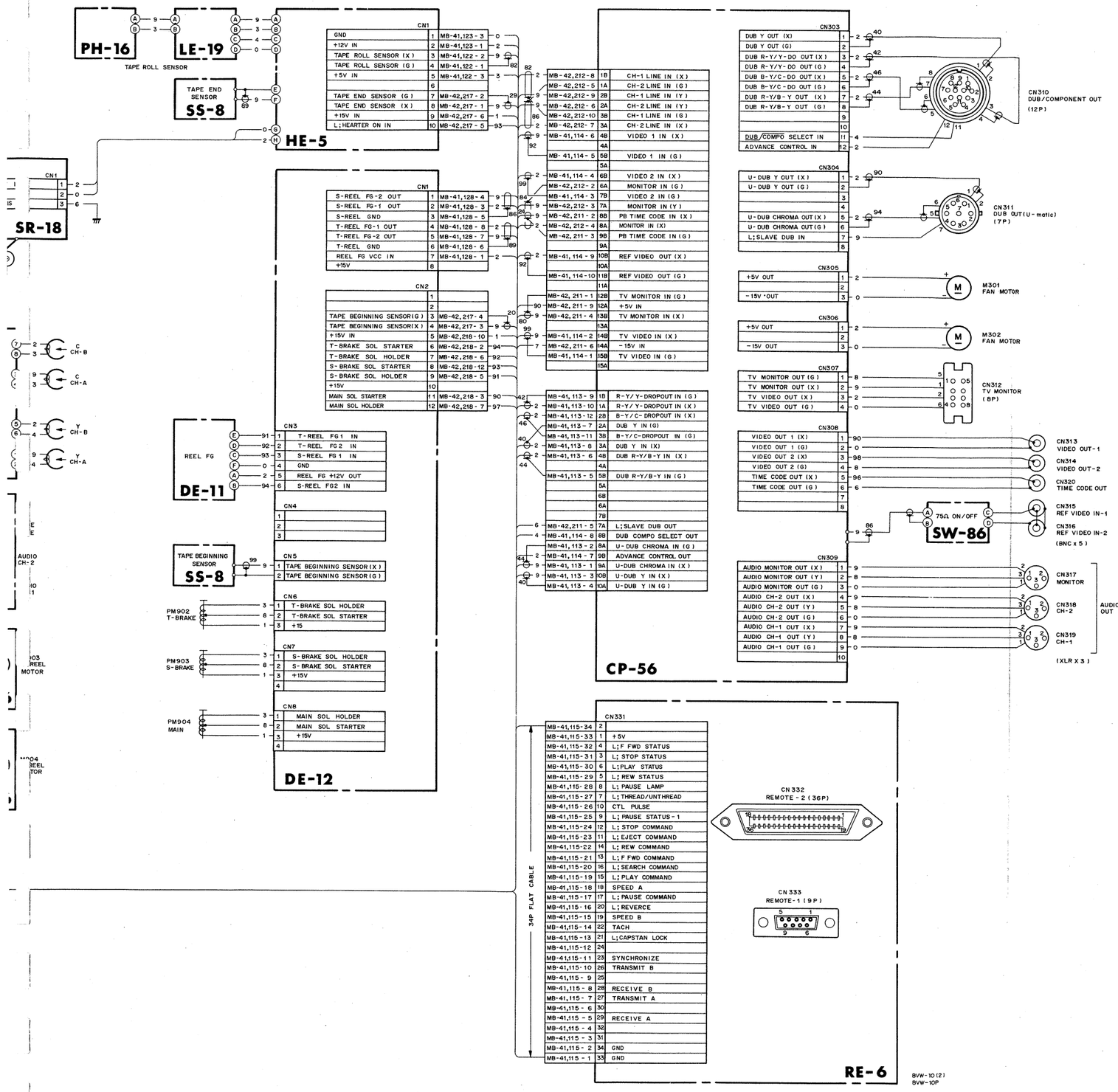

BVW-10(2)
BVW-10P

SECTION 19
SPARE PARTS AND FIXTURE

19-1. PARTS INFORMATION

1. Safety Related Component Warning
   Components identified by shading marked with ⚠ on the schematic diagrams, exploded views and electrical spare parts list are critical to safe operation. Replace these components with Sony parts whose parts numbers appear as shown in this manual or in service bulletins and service manual supplements published by Sony.

2. Replacement Parts supplied from Sony Parts Center will sometimes have different shape and outside view from the parts which actually in use. This is due to "accommodating the improved parts and/or engineering changes" or "standardization of genuine parts".
   - This manual's exploded views and electrical spare parts lists are indicating the parts numbers of "the standardized genuine parts at present".
   - Regarding engineering parts changes in our engineering department, refer Sony service bulletins and service manual supplements.

3. Printed Components in Bold-Face type on the exploded views and electrical spare parts list are normally stocked for replacement purposes. The remaining parts are not normally required for routine service work. Orders for parts not shown in Bold-Face type will be processed, but allow for additional delivery time.

4. Item with no part number and/or no description are not stocked because they are seldom required for routine service.

5. (T) after a spring description is shown on the exploded views in order to indicate the number of a spring turn required for the use.
   (Example) Spring, tension (24T); This spring must be cut at its 24th turn for actual use.

19-2. EXPLODED VIEW

- Exploded views are composed of the following blocks.

(1) Take-up Side Reel Chassis
take-up reel table
take-up side brake
reel motor
tape beginning sensor

(2) Supply Side Reel Chassis
supply reel table
supply side brake
reel motor

(3) Head Drum, Stationary Heads and Tape Guides Block
head drum ass'y
CTL/full erase heads
audio/TC heads
tape guide
capstan motor

(4) Threading Ring Block
threading ring

(5) Pinch Press Mechanism Block
pinch press mechanism

(6) Supply Tension Regulator Block
supply tension regulator

(7) Gear Box Block
gear box

(8) Level Control Chassis Block
level control chassis

(9) Function Control Chassis Block
function control chassis
search dial
hinge

(10) Connector Panel Block
connector panel
ventilation fun

(11) TBC Control Block
TBC control block
hours meter

(12) Chassis Block (1)
mother board

(13) Switching Regulator Block

(14) Cassette-up Compartment Block
cassette-up compartment

(15) Ornamental Panel Block (1)
function control panel
level control panel

(16) Ornamental Panel Block (2)
side panel
top panel

(17) Printed Circuit Board Block (1)
printed circuit board

(18) Printed Circuit Board Block (2)
shield case
heat sink

(19) Extension Board Block
extension board

SCREW

	HEXAGON SOCKET SCREW	HEXAGON SET SCREW	(–) SET SCREW FLAT POINT	(–) SET SCREW CONE POINT
2.6 x 3	———	7-621-734-09	———	———
2.6 x 4	7-621-996-24	7-621-735-09	———	———
2.6 x 5	———	7-621-736-09	———	———
2.6 x 6	7-683-412-05	———	———	7-621-712-55
2.6 x8	7-683-413-05	———	———	7-621-712-65
2.6 x 10	———	———	———	7-621-712-75
3 x 4	———	7-683-238-01	———	———
3 x 5	———	———	7-683-175-01	———
3 x 6	7-683-403-04	———	7-683-176-01	7-683-176-21
3 x 8	7-683-404-04	———	———	7-683-177-21
3 x 10	7-683-405-04	———	———	7-683-178-21
3 x 12	———	———	———	7-683-179-21

	PS	PSW	B (BZn-N)	B (Cr-N)	PTT	PTTWH
2.6 x 4	7-621-972-05	———	7-621-912-10	7-621-912-18	———	7-687-508-31
2.6 x 6	7-621-972-25	7-621-981-15	7-621-912-30	7-621-912-38	———	7-687-501-31
2.6 x 8	7-621-972-35	7-621-981-25	7-621-912-40	7-621-912-48	———	7-687-502-31
2.6 x 10	7-621-972-45	7-621-981-35	7-621-912-50	7-621-912-58	———	7-687-503-31
2.6 x 12	7-621-972-55	7-621-981-45	7-621-912-60	7-621-912-68	———	7-687-504-31
2.6 x 14	7-621-972-65	7-621-981-55	7-621-912-70	7-621-912-78	———	7-687-505-31
2.6 x 16	7-621-972-75	7-621-981-65	7-621-912-80	7-621-912-88	———	7-687-506-31
2.6 x 20	7-621-972-85	7-621-981-75	7-621-912-90	7-621-912-98	———	7-687-507-31
3 x 5	7-686-446-01	———	———	———	———	———
3 x 6	7-686-447-01	7-686-527-01	7-686-624-09	7-686-624-04	7-687-411-31	7-687-510-31
3 x 8	7-686-448-01	7-686-528-01	7-686-625-09	7-686-625-04	7-687-412-31	7-687-511-31
3 x 10	7-686-449-01	7-686-529-01	7-686-626-09	7-686-626-04	7-687-413-31	7-687-512-31
3 x 12	7-686-450-01	7-686-530-01	7-686-627-09	7-686-627-04	7-687-414-31	7-687-513-31
3 x 16	7-686-452-01	7-686-532-01	7-686-629-09	7-686-629-04	———	———
3 x 20	7-686-453-01	7-686-533-01	7-686-630-09	7-686-630-04	———	———
3 x 25	7-686-454-01	7-686-534-01	7-686-631-09	7-686-631-04		
4 x 8	7-686-468-01	7-686-548-01	7-686-635-09	7-686-635-04	———	———
4 x 12	7-686-470-01	7-686-550-01	7-686-637-09	7-686-637-04	———	———
4 x 14	7-686-471-01	———	7-686-638-09	7-686-638-04	———	———
4 x 16	7-686-472-01	———	7-686-639-09	7-686-639-04	———	———
4 x 20	7-686-473-01	———	7-686-640-09	7-686-640-04	———	———

WASHER

	FLAT WASHER SMALL W.	FLAT WASHER MIDDLE W.	SPRING WASHER SW.	TOOTHED WASHER TYPE B LW.	HEXAGON NUT N.
2.6 mm	7-688-002-01	7-688-002-12	7-623-207-22	7-623-421-07	7-622-207-05
3 mm	7-688-003-01	7-688-003-12	7-688-003-11	7-623-422-07	7-684-023-04
4 mm	7-688-004-01	7-688-004-12	7-623-210-22	7-623-423-07	7-684-024-04
5 mm	7-688-005-01	7-688-005-01	7-623-212-22	———	7-684-025-04

	STOP RING E TYPE E.
2	7-624-104-04
2.3	7-624-105-04
3	7-624-106-04
4	7-624-108-04
5	7-624-109-04
6	7-624-110-04

REEL CHASSIS (1)

REEL CHASSIS (1)

Take-up Side Reel Chassis

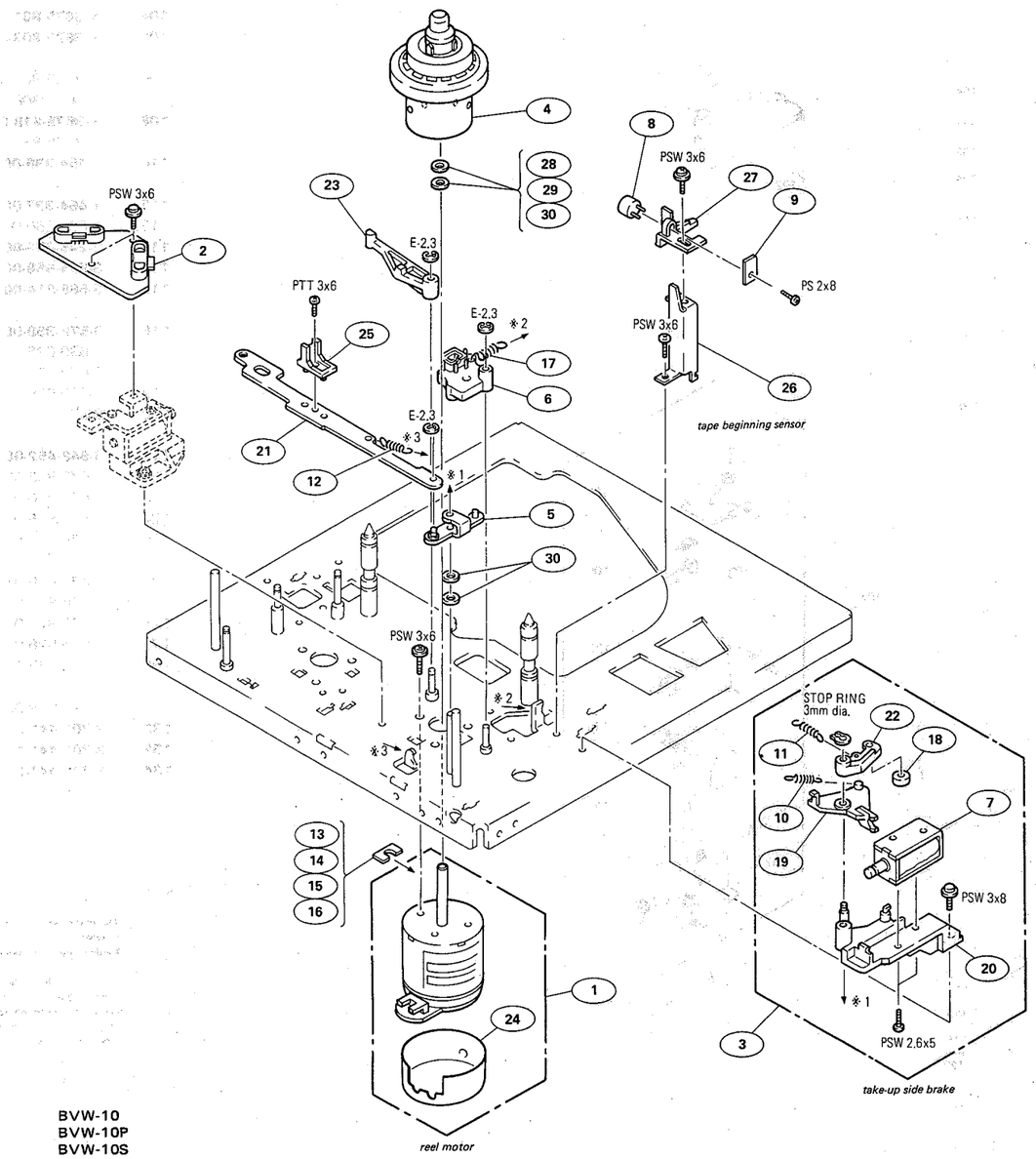

BVW-10
BVW-10P
BVW-10S

No.	Parts No.	Description
1	**A-6737-113-B**	**MOTOR ASS'Y, REEL**
2	**A-6739-018-A**	**PC BOARD ASS'Y, DM**
3	**A-6741-044-A**	**BRAKE ASS'Y, T**
4	**X-3675-801-3**	**TABLE ASS'Y, REEL**
5	X-3675-804-0	ARM ASS'Y, TB
6	**X-3675-818-0**	**BRAKE ASS'Y, M**
7	**1-454-336-00**	**SOLENOID**
8	**1-459-051-00**	**HEAD, SENSING**
9	1-586-946-00	PRINTED CIRCUIT BOARD, SS-8
10	**3-489-310-XX**	**SPRING, TENSION (18T)**
11	**3-508-108-XX**	**SPRING, TENSION (17T)**
12	**3-575-358-00**	**SPRING, TENSION**
13	3-630-035-01	SPACER, VIDEO HEAD (0.01T)
14	3-630-035-11	SPACER, VIDEO HEAD (0.02T)
15	3-630-035-21	SPACER, VIDEO HEAD (0.03T)
16	3-630-035-31	SPACER, VIDEO HEAD (0.04T)
17	**3-648-452-00**	**SPRING, TENSION**
18	**3-654-617-03**	**RUBBER, T BRAKE**
19	3-654-618-00	LIMITER, T BRAKE
20	3-654-619-00	CHASSIS, T BRAKE
21	3-675-815-00	JOINT, MB
22	3-675-816-00	TABLE, BRAKE, T
23	3-675-825-00	ARM, RELEASE
24	3-675-826-00	COVER, SHIELD, RM
25	3-675-833-00	HOLDER, MB
26	3-677-701-00	BRACKET, T SENSOR
27	3-677-702-00	HOLDER, T SENSOR
28	**3-701-441-01**	**WASHER, POLY 4MM DIA. (0.13T)**
29	**3-701-441-11**	**WASHER, POLY 4MM DIA. (0.25T)**
30	**3-701-441-21**	**WASHER, POLY 4MM DIA. (0.5T)**

NOTE:

1. **The shaded and ⚠ -marked components are critical to safety. Replace only with same components as specified.**
2. Parts printed in **Bold-Face type** are normally stocked for replacement purposes. The remaining parts shown in this manual are not normally required for routine service work. Orders for parts not shown in Bold-Face type will be processed, but allow for additional delivery time.
3. Item with no part number and/or no description are not stocked because they are seldom required for routine service.

REEL CHASSIS (2)

Supply Side Reel Chassis

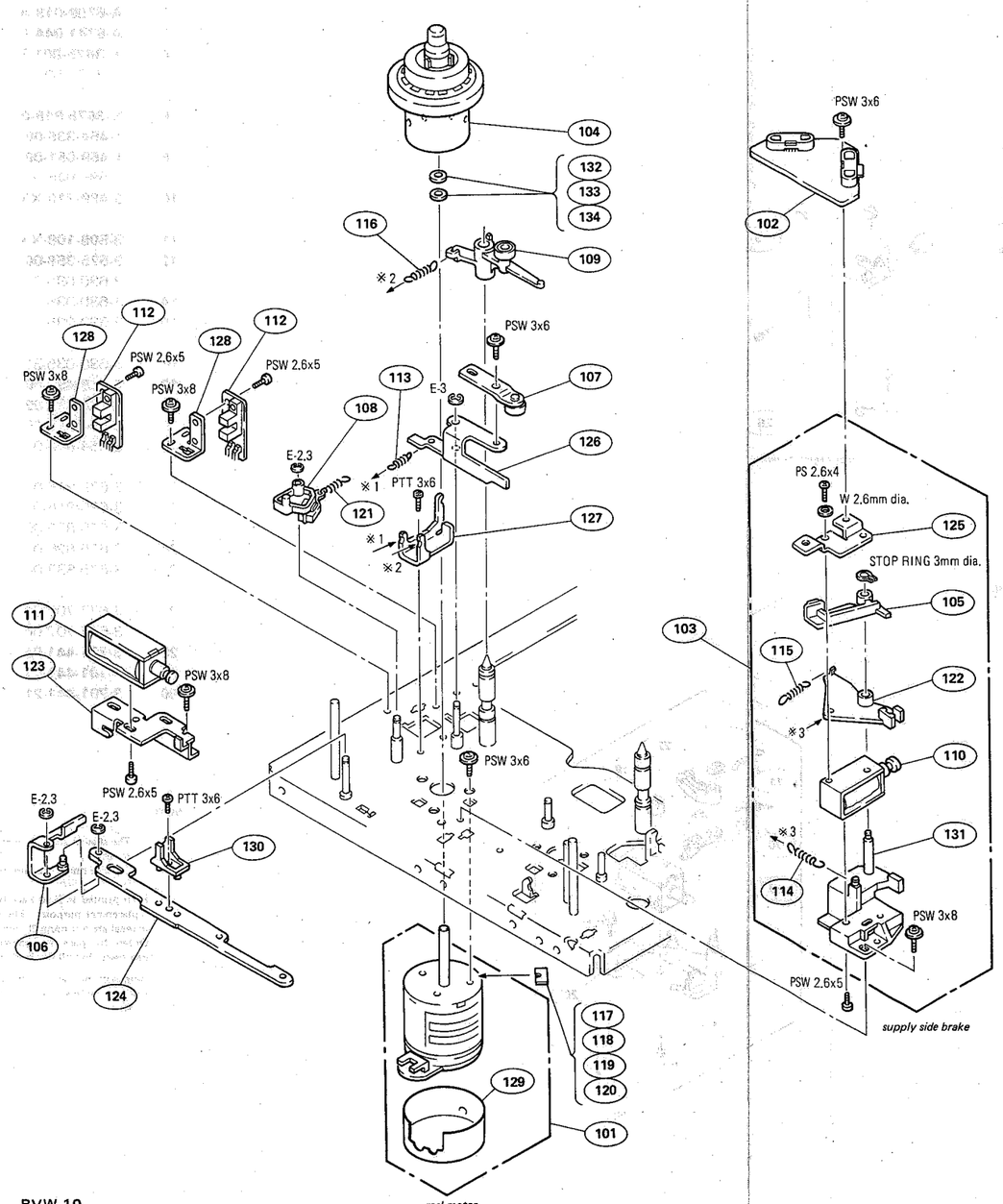

BVW-10
BVW-10P
BVW-10S

No.	Parts No.	Description
101	**A-6737-113-B**	**MOTOR ASS'Y, REEL**
102	**A-6739-018-A**	**PC BOARD ASS'Y, DM**
103	A-6741-045-A	BRAKE ASS'Y, S
104	**X-3675-801-3**	**TABLE ASS'Y, REEL**
105	**X-3675-803-0**	**ARM ASS'Y, S BRAKE**
106	X-3675-805-0	ARM ASS'Y, SB
107	X-3675-806-0	PLATE ASS'Y, ADJUSTMENT, R
108	**X-3675-818-0**	**BRAKE ASS'Y, M**
109	X-3675-833-0	ARM ASS'Y, TE
110	**1-454-336-00**	**SOLENOID**
111	**1-454-337-00**	**SOLENOID**
112	1-608-060-00	PRINTED CIRCUIT BOARD, TE-2
113	**2-245-253-00**	**SPRING**
114	**3-534-558-00**	**SPRING, TENSION**
115	**3-568-814-00**	**SPRING, TENSION**
116	**3-575-358-00**	**SPRING, TENSION**
117	3-630-035-01	SPACER, VIDEO HEAD (0.01T)
118	3-630-035-11	SPACER, VIDEO HEAD (0.02T)
119	3-630-035-21	SPACER, VIDEO HEAD (0.03T)
120	3-630-035-31	SPACER, VIDEO HEAD (0.04T)
121	**3-648-452-00**	**SPRING, TENSION**
122	3-675-803-00	LIMITER, S BRAKE
123	3-675-810-00	BASE, MB SOLENOID
124	3-675-815-00	JOINT, MB
125	3-675-818-00	BRACKET, DM
126	3-675-819-00	ARM, RING
127	3-675-820-00	HOOK, SPRING
128	3-675-821-00	BRACKET, TE
129	3-675-826-00	COVER, SHIELD, RM
130	3-675-833-00	HOLDER, MB
131	3-675-838-00	BASE, S BRAKE
132	**3-701-441-01**	**WASHER, POLY 4MM DIA. (0.13T)**
133	**3-701-441-11**	**WASHER, POLY 4MM DIA. (0.25T)**
134	**3-701-441-21**	**WASHER, POLY 4MM DIA. (0.5T)**

NOTE:

1. **The shaded and ⚠-marked components are critical to safety.**
   Replace only with same components as specified.
2. Parts printed in **Bold-Face type** are normally stocked for replacement purposes. The remaining parts shown in this manual are not normally required for routine service work. Orders for parts not shown in Bold-Face type will be processed, but allow for additional delivery time.
3. Item with no part number and/or no description are not stocked because they are seldom required for routine service.

 DRUM, HEAD, TAPE GUIDE

Head Drum, Stationary Heads and Tape Guides Block

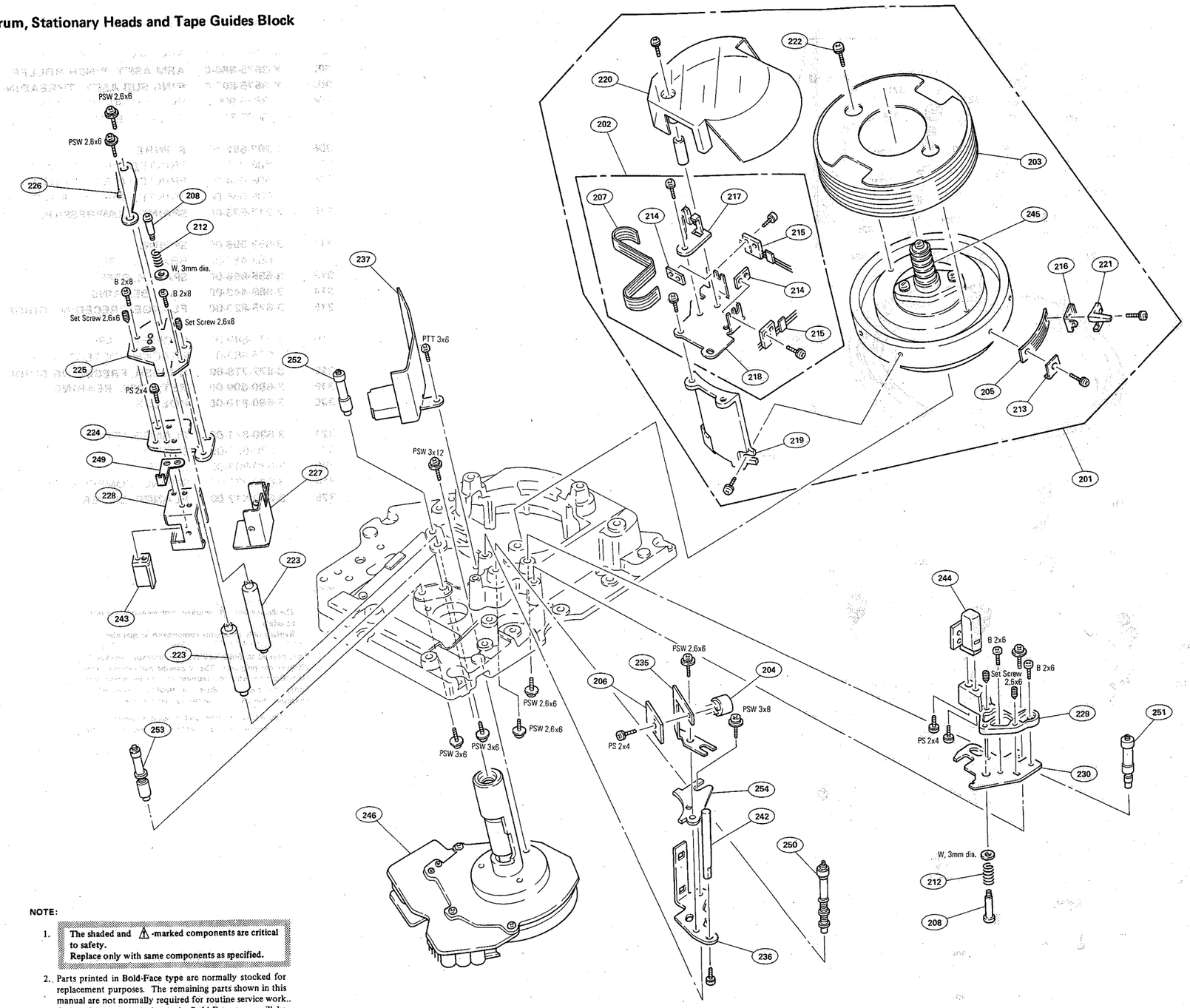

No.	Parts No.	Description
201		**HEAD DRUM ASS'Y**
202	A-6709-423-A	BRUSH ASS'Y
203		**DRUM ASS'Y, UPPER**
204	**1-459-051-00**	**HEAD, SENSING**
205	**1-586-633-00**	**DETECTOR, DEW**
206	1-586-946-00	PRINTED CIRCUIT BOARD, SS-8
207	1-608-132-00	PRINTED CIRCUIT BOARD, SR-18
208	3-437-173-02	SCREW, HEAD ADJUSTING
212	**3-653-350-00**	**SPRING, COMPRESSION**
213	3-655-631-00	TERMINAL, GROUND
214	3-665-001-00	NUT, PLATE
215	3-665-017-00	BRUSH
216	3-675-701-00	TERMINAL BOARD
217	**3-675-726-00**	**HOLDER, CONNECTOR**
218	3-675-727-00	DECK, BRUSH
219	3-675-728-00	STUD, BRUSH SUPPORT
220	3-675-730-00	COVER, BRUSH
221	3-675-739-00	SPACER, INSULATING (2)
222	**3-675-740-00**	**EXT TOOTH (W) (MIDDLE)**
223	3-675-804-00	BRACKET, ADJUSTMENT PLATE
224	3-675-805-00	PLATE (1), ADJUSTMENT
225	3-675-806-03	PLATE (2), ADJUSTMENT
226	3-675-807-00	PLATE (3), ADJUSTMENT
227	3-675-808-00	CASE (2), SHIELD
228	3-675-836-00	CASE (1), SHIELD
229	3-675-842-00	PLATE, ADJUSTMENT, CTL
230	3-675-846-00	BASE, CTL HEAD
235	3-675-858-00	BRACKET, S SENSOR
236	3-675-860-00	CHASSIS, TG-0
237	3-677-715-03	PLATE (B), SHIELD, AT
242	3-677-761-00	GUIDE, TG-0
243	**8-825-554-51**	**HEAD, AT**
244	**8-825-554-71**	**HEAD, CTL**
245	**8-825-626-20**	**RING ASS'Y, SLIP (SL-SR2)**
246	**8-838-047-02**	**MOTOR, DC (BHF-1905B)**
249	3-677-783-00	PLATE, AT
250	**A-6746-027-A**	**ROLLER (TG1N) ASS'Y, TAPE**
251	**A-6746-028-A**	**ROLLER (TG2) ASS'Y, TAPE**
252	**A-6746-029-A**	**ROLLER (TG3) ASS'Y, TAPE**
253	**A-6746-030-A**	**ROLLER (TG4) ASS'Y, TAPE**
254	**3-677-794-00**	**SUPPORT, CAPSTAN**

NOTE:

1. **The shaded and ⚠-marked components are critical to safety. Replace only with same components as specified.**
2. Parts printed in **Bold-Face type** are normally stocked for replacement purposes. The remaining parts shown in this manual are not normally required for routine service work. Orders for parts not shown in Bold-Face type will be processed, but allow for additional delivery time.
3. Item with no part number and/or no description are not stocked because they are seldom required for routine service.

BVW-10P
BVW-10S

THREADING RING

Threading Ring Block

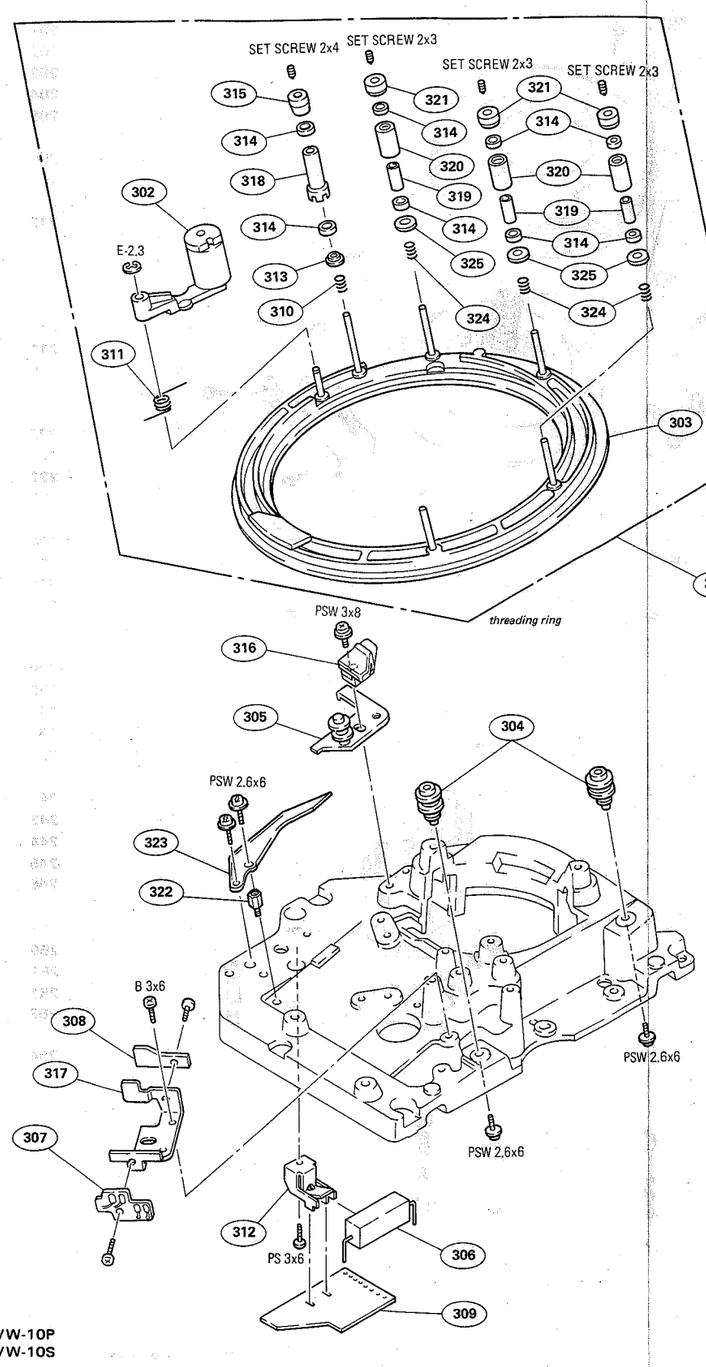

BVW-10P
BVW-10S

No.	Parts No.	Description
301	A-6750-153-A	RING ASS'Y, THREADING
302	**X-3675-850-0**	**ARM ASS'Y, PINCH ROLLER**
303	**X-3675-807-0**	**RING SUB ASS'Y, THREADING**
304	X-3675-809-0	ROLLER (A) ASS'Y, RING
305	X-3675-810-0	ROLLER (B) ASS'Y, RING
306	**1-207-682-11**	**R, WIRE**
307	1-608-053-00	PRINTED CIRCUIT BOARD, LE-19
308	1-608-054-00	PRINTED CIRCUIT BOARD, PH-16
309	1-608-056-00	PRINTED CIRCUIT BOARD, HE-5
310	**2-217-533-00**	**SPRING, COMPRESSION**
311	**3-653-396-00**	**SPRING**
312	3-653-487-00	BRACKET, RESISTOR
313	**3-655-966-00**	**SPACER, STEP**
314	**3-669-443-00**	**BALL BEARING**
315	**3-675-823-00**	**FLANGE, PRECEDING GUIDE**
316	3-675-849-00	STOPPER, TAPE
317	3-675-862-00	BRACKET, DETECTION, ROTOR
318	**3-677-718-00**	**ROLLER, PRECEDING GUIDE**
319	**3-680-809-00**	**RETAINER, BEARING**
320	**3-680-810-00**	**ROLLER**
321	**3-680-811-00**	**FLANGE, UPPER**
322	2-270-601-00	SUPPORT
323	3-680-803-00	LEVER
324	3-637-331-00	SPRING, COMPRESSION
325	**3-680-812-00**	**FLANGE, LOWER**

NOTE:

1. **The shaded and ⚠-marked components are critical to safety.**
   Replace only with same components as specified.
2. Parts printed in **Bold-Face type** are normally stocked for replacement purposes. The remaining parts shown in this manual are not normally required for routine service work. Orders for parts not shown in Bold-Face type will be processed, but allow for additional delivery time.
3. Item with no part number and/or no description are not stocked because they are seldom required for routine service.

Pinch Press Mechanism Block

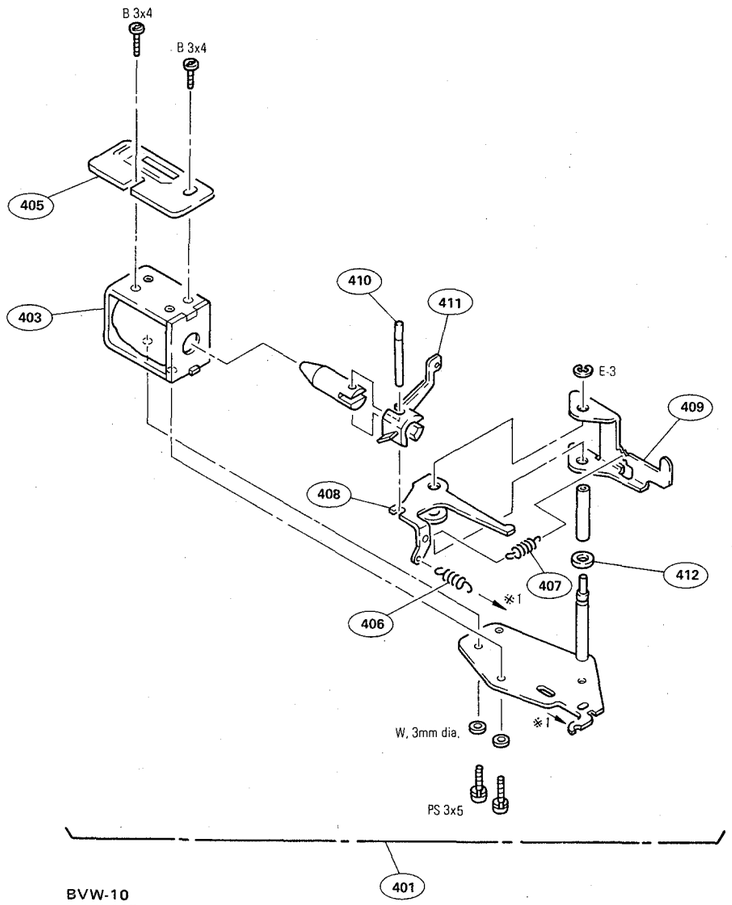

BVW-10
BVW-10P
BVW-10S

No.	Parts No.	Description
401	**A-6749-078-A**	**MECH ASS'Y, PINCH PRESS**
403	**1-454-338-00**	**SOLENOID**
405	1-608-069-00	PRINTED CIRCUIT BOARD, PD-20
406	**3-446-165-00**	**SPRING, TENSION**
407	**3-645-168-00**	**SPRING, TENSION**
408	3-653-379-00	LEVER (A), PINCH COMPRESSION
409	3-653-380-02	LEVER (B), PINCH COMPRESSION
410	3-653-381-00	PIN, SOLENOID
411	3-653-383-00	STOPPER, SLACK SENSOR
412	**3-701-441-21**	**WASHER, POLY 4MM DIA. (0.5T)**

NOTE:

1. **The shaded and ⚠-marked components are critical to safety.**
   Replace only with same components as specified.
2. Parts printed in **Bold-Face type** are normally stocked for replacement purposes. The remaining parts shown in this manual are not normally required for routine service work. *Orders for parts not shown in Bold-Face type will be* processed, but allow for additional delivery time.
3. Item with no part number and/or no description are not stocked because they are seldom required for routine service.

Supply Tension Regulator Block

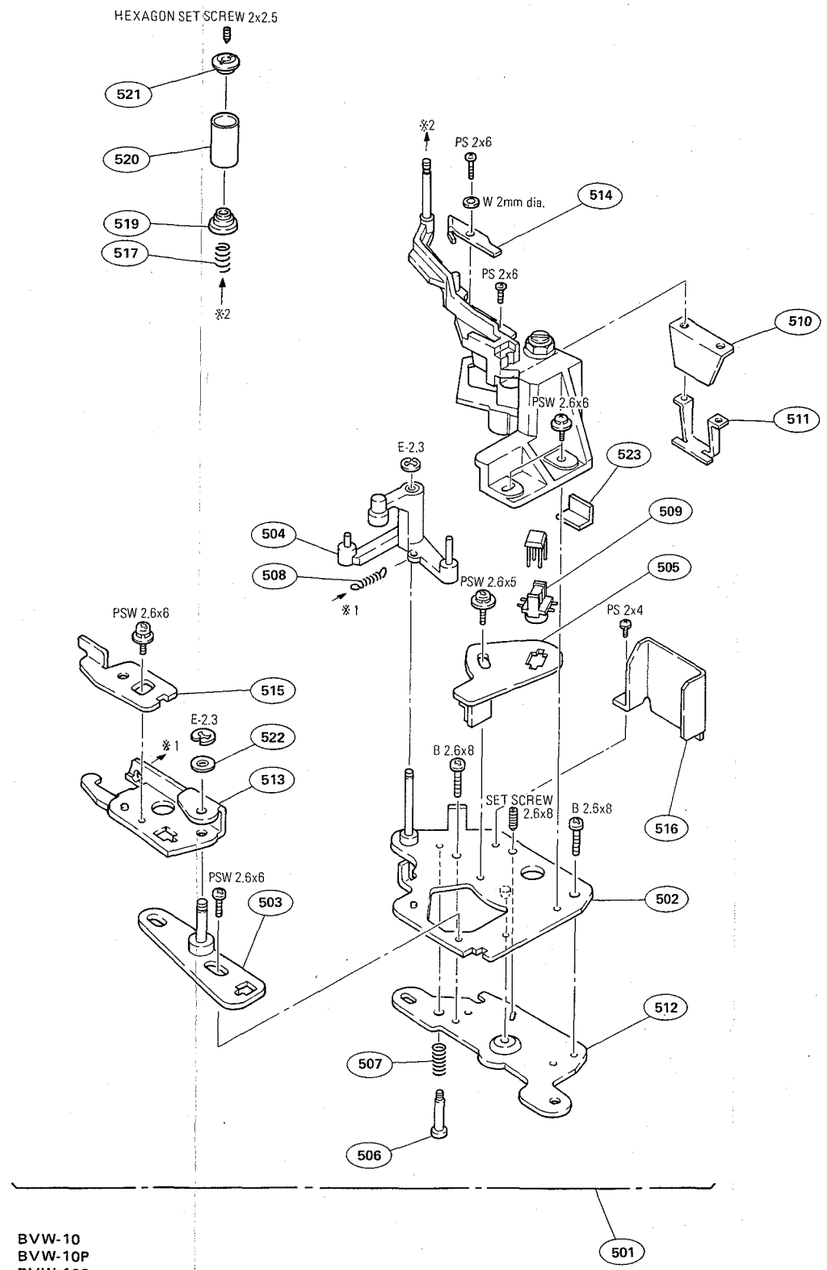

BVW-10
BVW-10P
BVW-10S

Supply Tension Regulator Block

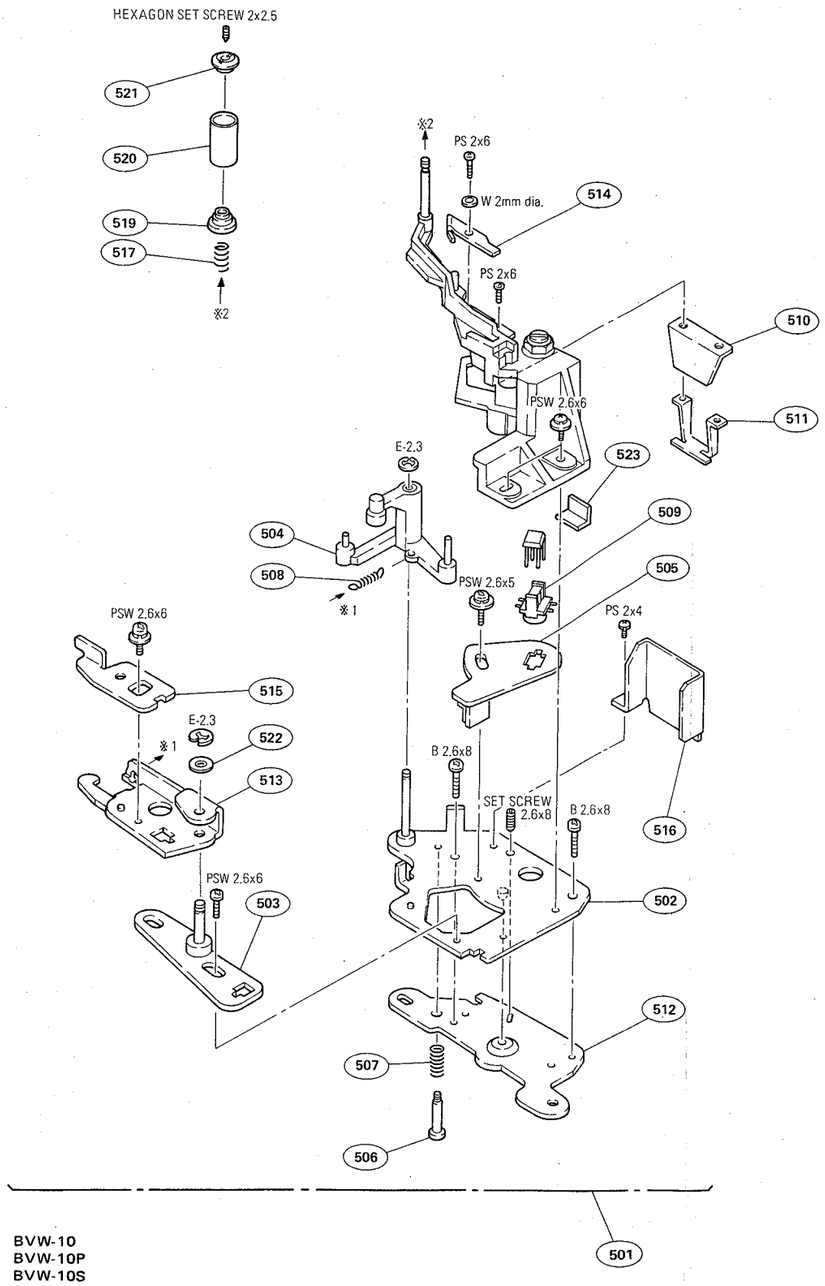

BVW-10
BVW-10P
BVW-10S

No.	Parts No.	Description
501	**A-6742-045-A**	**TENSION REGULATOR ASS'Y**
502	X-3675-827-0	PLATE ASS'Y, ADJUSTMENT
503	X-3675-828-0	HOOK ASS'Y, TENSION REGULATOR
504	X-3675-829-0	ARM ASS'Y, REWIND
505	1-608-055-00	PRINTED CIRCUIT BOARD, TR-14
506	3-437-173-02	SCREW, HEAD ADJUSTING
507	**3-653-350-00**	**SPRING, COMPRESSION**
508	**3-661-382-00**	**SPRING, TENSION**
509	**3-675-868-00**	**HOLDER, DME**
510	3-675-872-00	SPRING, LEAF
511	3-675-873-00	PROTECTOR
512	X-3675-835-0	BRACKET, TENSION REGULATOR
513	3-675-880-00	ARM, HOOK, TENSION REGULATOR
514	3-675-882-00	PLATE, ADJUSTMENT, REWIND
515	3-675-883-00	PLATE, ADJUSTMENT, HOOK
516	3-675-885-00	PLATE, SHIELD, T-DME
517	2-618-901-00	SPRING, COMPRESSION
519	**3-677-749-00**	**RETAINER, B**
520	**X-3675-842-0**	**ROLLER ASS'Y, TENSION REGULATOR**
521	**3-677-752-00**	**NUT, ADJUSTMENT, T**
522	**3-701-439-11**	**WASHER, POLY 3MM DIA, 0.25T**
523	3-677-782-00	SPACER S/N 10151 AND LATER

NOTE:

1. **The shaded and ⚠-marked components are critical to safety.**
   Replace only with same components as specified.
2. Parts printed in **Bold-Face type** are normally stocked for replacement purposes. The remaining parts shown in this manual are not normally required for routine service work. Orders for parts not shown in Bold-Face type will be processed, but allow for additional delivery time.
3. Item with no part number and/or no description are not stocked because they are seldom required for routine service.

Gear Box Block

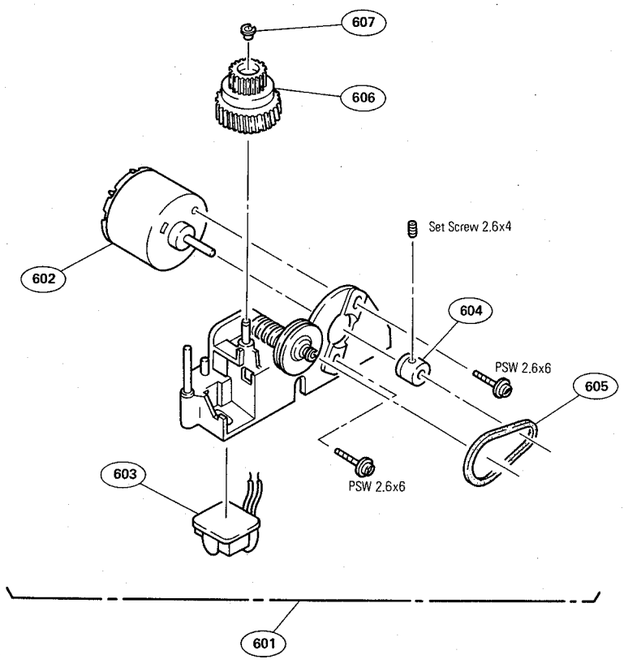

BVW-10
BVW-10P
BVW-10S

No.	Parts No.	Description
601	**A-6750-141-A**	**BOX ASS'Y, GEAR**
602	**1-541-163-00**	**MOTOR**
603	1-585-913-00	PRINTED CIRCUIT BOARD, LM-4
604	3-653-386-00	PULLEY (2), LM
605	**3-653-387-00**	**BELT, LM**
606	**3-653-388-00**	**GEAR, DRIVE**
607	**3-703-074-00**	**CAP 3, SHAFT**

NOTE:

1. **The shaded and ⚠-marked components are critical to safety. Replace only with same components as specified.**
2. Parts printed in **Bold-Face** type are normally stocked for replacement purposes. The remaining parts shown in this manual are not normally required for routine service work. Orders for parts not shown in Bold-Face type will be processed, but allow for additional delivery time.
3. Item with no part number and/or no description are not stocked because they are seldom required for routine service.

Level Control Chassis Block

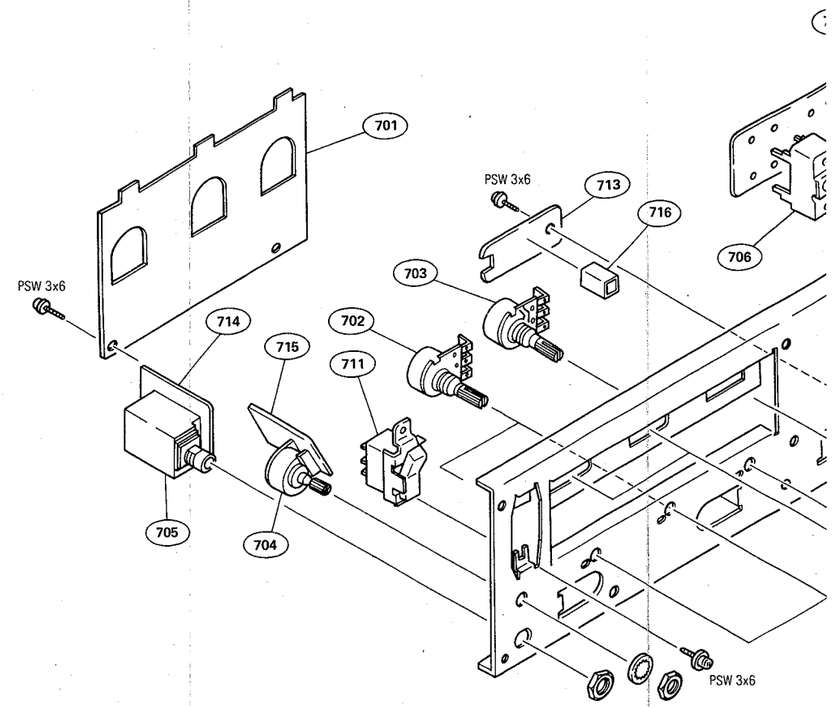

BVW-10
BVW-10P
BVW-10S

No.	Parts No.	Description
701	A-6728-526-A	MOUNTED CIRCUIT BOARD, CP-52
702	**1-224-694-XX**	**R, VAR, CARBON 20K**
703	**1-226-616-00**	**R, VAR, CARBON 100K**
704	**1-228-218-00**	**R, VAR, CARBON 500/500**
705	**1-507-553-00**	**JACK**
706	**1-516-963-00**	**SWITCH, LEVER SLIDE**
707	**1-516-995-00**	**SWITCH, LEVER SLIDE**
708	**1-518-461-00**	**LAMP, PILOT**
709	**1-520-439-00**	**METER, VU**
710	**1-520-455-21**	**METER, RF**
⚠ **711**	**1-554-256-00**	**SWITCH, ROCKER (AC POWER)**
712	1-608-050-00	PRINTED CIRCUIT BOARD, SW-85
713	1-608-057-00	PRINTED CIRCUIT BOARD, LA-4
714	1-608-062-00	PRINTED CIRCUIT BOARD, HP-7
715	1-	
716	3-	
717	3-	

Level Control Chassis Block

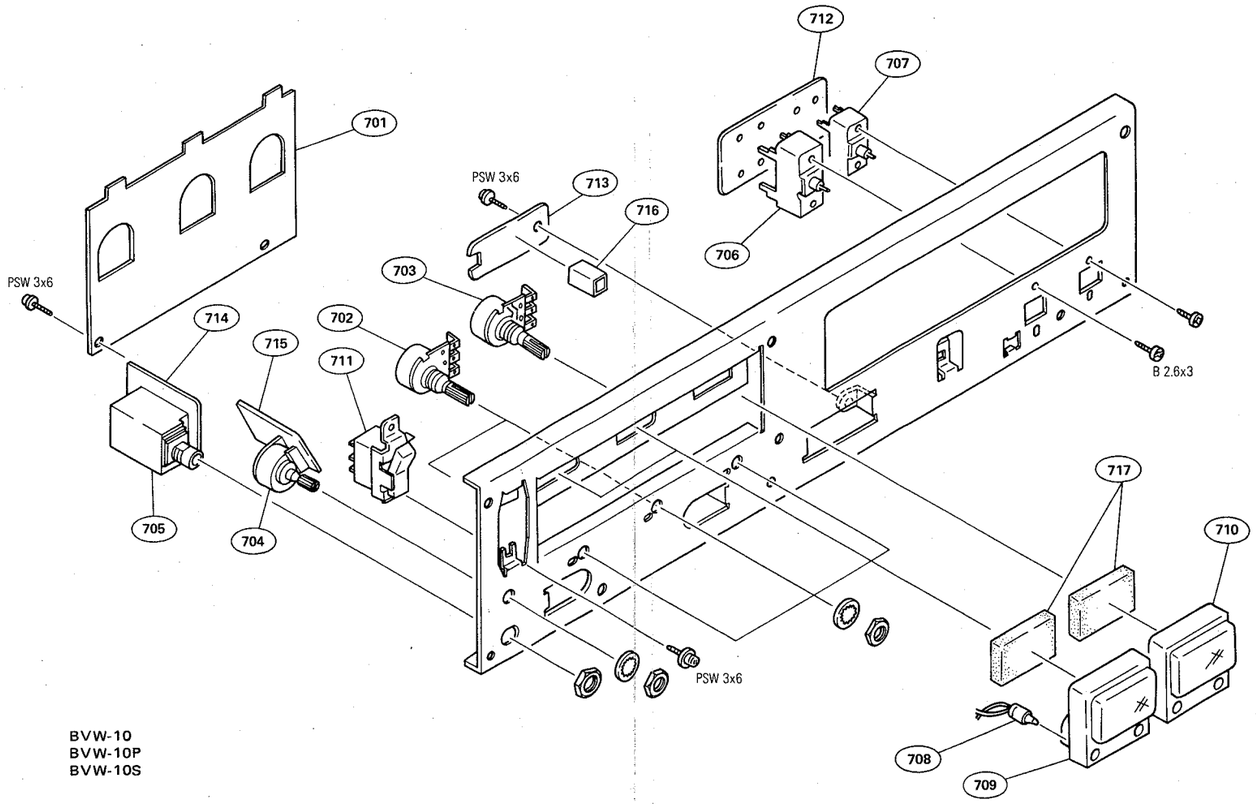

BVW-10
BVW-10P
BVW-10S

No.	Parts No.	Description
701	A-6728-526-A	MOUNTED CIRCUIT BOARD, CP-52
702	**1-224-694-XX**	**R, VAR, CARBON 20K**
703	**1-226-616-00**	**R, VAR, CARBON 100K**
704	**1-228-218-00**	**R, VAR, CARBON 500/500**
705	**1-507-553-00**	**JACK**
706	**1-516-963-00**	**SWITCH, LEVER SLIDE**
707	**1-516-995-00**	**SWITCH, LEVER SLIDE**
708	**1-518-461-00**	**LAMP, PILOT**

No.	Parts No.	Description
709	**1-520-439-00**	**METER, VU**
710	**1-520-455-21**	**METER, RF**
⚠ **711**	**1-554-256-00**	**SWITCH, ROCKER (AC POWER)**
712	1-608-050-00	PRINTED CIRCUIT BOARD, SW-85
713	1-608-057-00	PRINTED CIRCUIT BOARD, LA-4
714	1-608-062-00	PRINTED CIRCUIT BOARD, HP-7

No.	Parts No.	Description
715	1-608-294-00	PRINTED CIRCUIT BOARD, VR-8
716	3-668-124-00	HOLDER, LED
717	3-677-141-00	CUSHION, METER

NOTE:

1. **The shaded and ⚠-marked components are critical to safety.**
   Replace only with same components as specified.
2. Parts printed in **Bold-Face type** are normally stocked for replacement purposes. The remaining parts shown in this manual are not normally required for routine service work. Orders for parts not shown in Bold-Face type will be processed, but allow for additional delivery time.
3. Item with no part number and/or no description are not stocked because they are seldom required for routine service.

Function Control Chassis Block

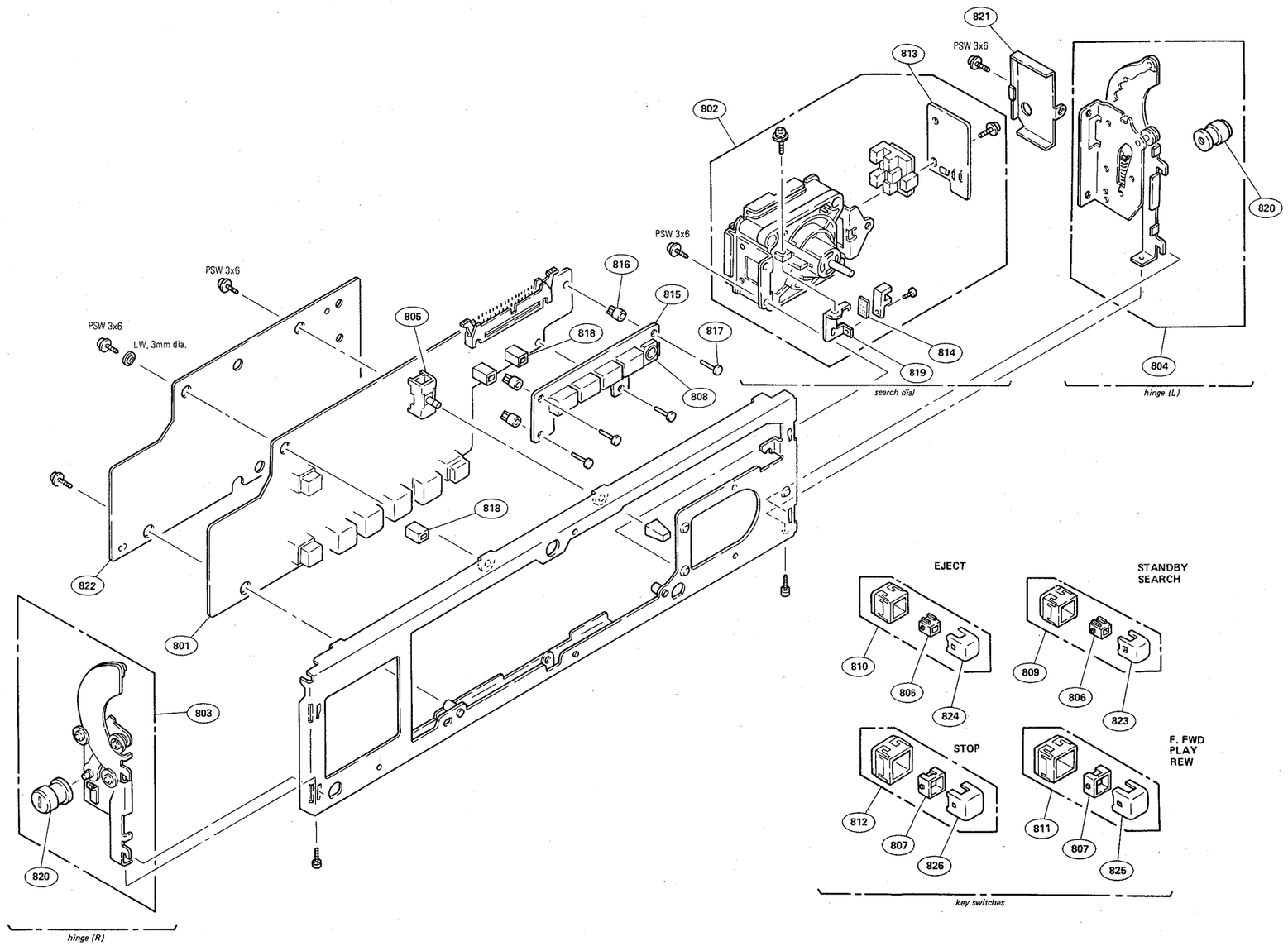

No.	Parts No.	Description
801	A-6728-530-A	MOUNTED CIRCUIT BOARD, KY-32
802	**A-6734-106-A**	**DIAL ASS'Y, SEARCH**
803	A-6736-030-A	HINGE (LEFT) ASS'Y
804	A-6736-031-A	HINGE (RIGHT) ASS'Y
805	**1-516-994-00**	**SWITCH, LEVER SLIDE**
806	**1-518-450-11**	**LAMP, PILOT**
807	**1-518-450-21**	**LAMP, PILOT**
808	**1-552-539-00**	**SWITCH, KEY BOARD**
809	**1-553-550-11**	**SWITCH, PUSH (12 CORNER)**
810	**1-553-550-31**	**SWITCH, PUSH (12 CORNER)**
811	**1-553-551-11**	**SWITCH, PUSH (17 CORNER)**
812	**1-553-551-32**	**SWITCH, PUSH (17 CORNER)**
813	1-604-351-00	PRINTED CIRCUIT BOARD, PC-9
814	1-604-353-00	PRINTED CIRCUIT BOARD, PC-14
815	1-607-973-00	PRINTED CIRCUIT BOARD, DP-30
816	**3-659-487-00**	**HOLDER, BUZZER**
817	**3-659-488-00**	**PIN, BUZZER HOLDER**
818	3-668-123-00	HOLDER, LAMP
819	3-668-151-00	BRACKET, PC-14
820	3-668-407-00	NUT, LOCK
821	3-668-417-00	COVER, PROTECTION, PC-9
822	3-677-148-00	COVER, KEY PANEL
823	**3-706-480-01**	**KEY TOP**
824	**3-706-480-22**	**KEY TOP**
825	**3-706-481-01**	**KEY TOP**
826	**3-706-481-22**	**KEY TOP**

NOTE:

1. **The shaded and ⚠-marked components are critical to safety. Replace only with same components as specified.**
2. Parts printed in **Bold-Face type** are normally stocked for replacement purposes. The remaining parts shown in this manual are not normally required for routine service work. Orders for parts not shown in Bold-Face type will be processed, but allow for additional delivery time.
3. Item with no part number and/or no description are not stocked because they are seldom required for routine service.

BVW-10
BVW-10P
BVW-10S

Connector Panel Block

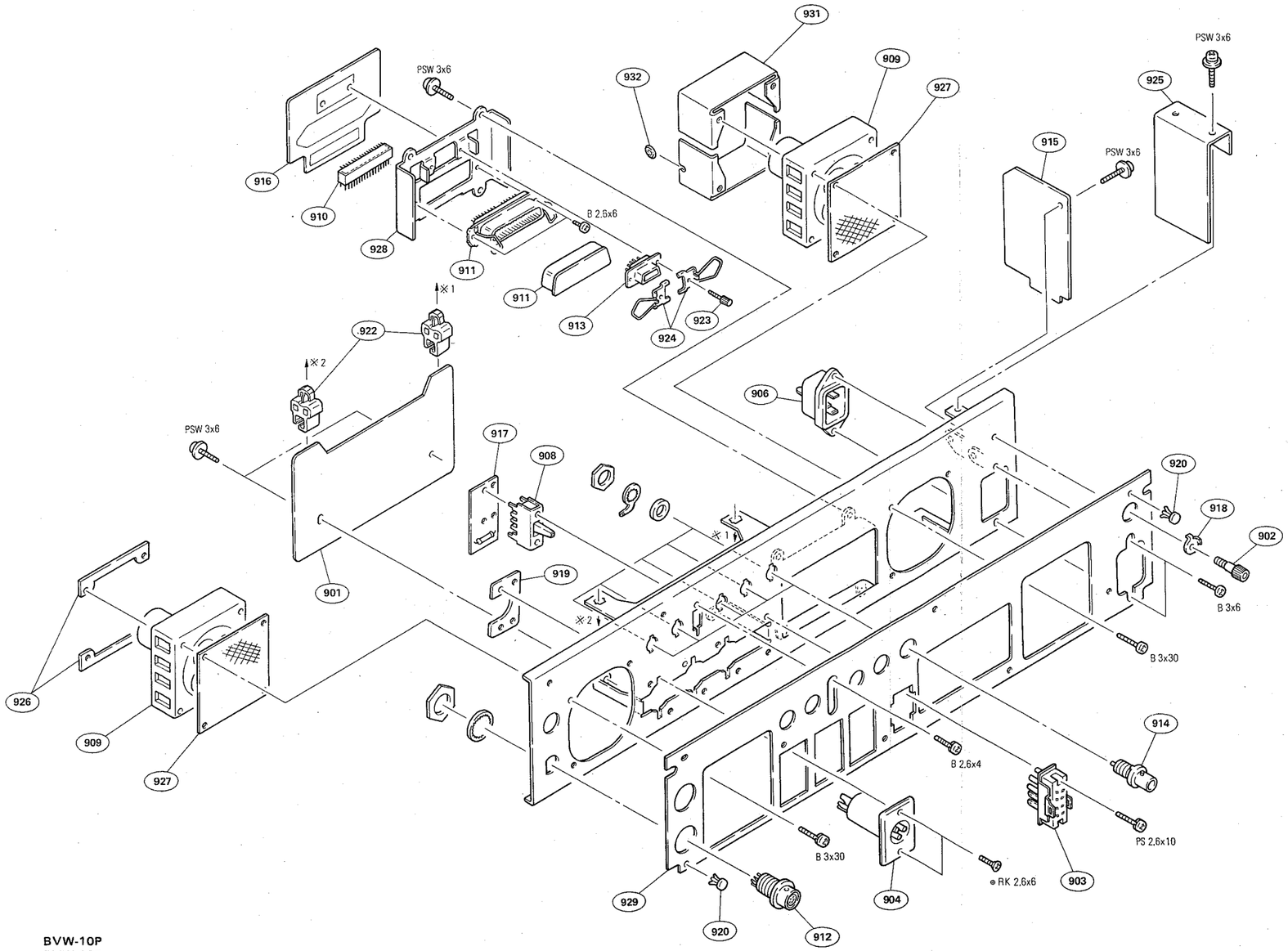

BVW-10P
BVW-10S

No.	Parts No.	Description
901	A-6728-588-A	MOUNTED CIRCUIT BOARD, CP-56
902	**X-2068-004-0**	**TERMINAL ASS'Y**
903	**1-509-095-00**	**SOCKET, MULTI (8P)**
904	**1-509-176-00**	**RECEPTACLE, XLR, 3P (MALE)**
⚠ **906**	**1-509-546-00**	**3P INLET**
908	**1-516-777-XX**	**SWITCH, SLIDE**
909	**1-541-209-00**	**MOTOR, BRUSHLESS FAN**
910	**1-560-546-00**	**CONNECTOR, P (LIGHT ANGLE) 34P**
911	**1-561-028-00**	**CONNECTOR, 36P**
912	**1-561-045-00**	**CONNECTOR, (R-F)**
913	**1-561-655-00**	**CONNECTOR SOCKET, MINIATURE 9P**
914	**1-561-781-21**	**RECEPTACLE, BNC**
915	1-607-968-00	PRINTED CIRCUIT BOARD, AC-40
916	1-608-063-00	PRINTED CIRCUIT BOARD, RE-6
917	1-608-064-00	PRINTED CIRCUIT BOARD, SW-86
918	**2-068-008-00**	**WASHER**
919	2-232-914-00	PLATE NUT, XLR
920	**3-531-576-01**	**RIVET**
922	3-659-682-00	HOLDER, PC BOARD
923	3-668-459-00	SCREW, CONNECTOR
924	3-668-460-00	SPRING
925	3-675-896-00	COVER, FUSE
926	3-675-897-00	BRACKET, FAN
927	3-675-898-00	PLATE, VENTILATION
928	3-675-899-00	BRACKET, RE
929	3-677-109-11	PLATE, ORNAMENTAL, REAR PANEL
931	3-677-774-00	BRACKET, FAN, N
932	**3-815-122-00**	**BUSHING**

NOTE:

1. **The shaded and ⚠ -marked components are critical to safety. Replace only with same components as specified.**
2. Parts printed in **Bold-Face type** are normally stocked for replacement purposes. The remaining parts shown in this manual are not normally required for routine service work. Orders for parts not shown in Bold-Face type will be processed, but allow for additional delivery time.
3. Item with no part number and/or no description are not stocked because they are seldom required for routine service.

TBC CONTROL CHASSIS BLOCK (1)

TBC Control Block

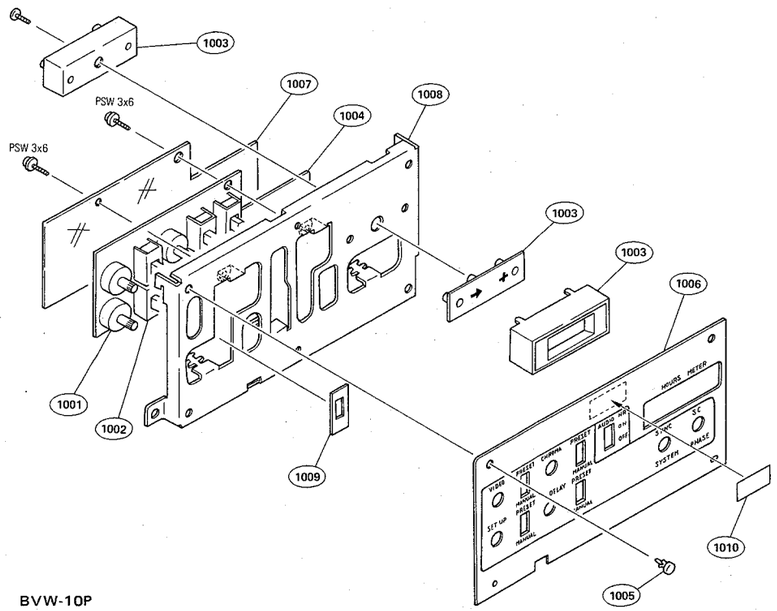

BVW-10P

Chassis Block (1)

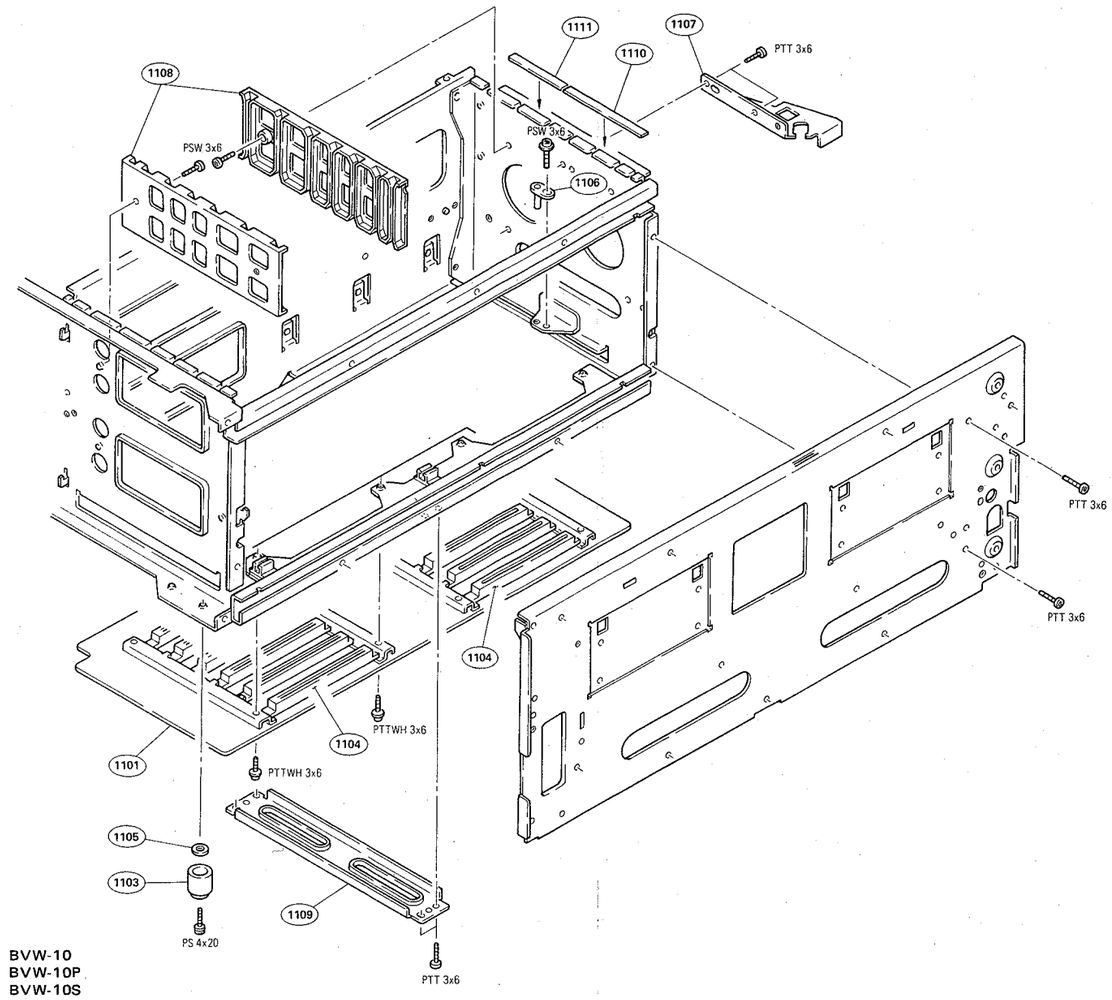

BVW-10
BVW-10P
BVW-10S

No.	Parts No.	Description
1001	**1-228-770-00**	**R, VAR, CARBON 5K**
1002	**1-516-226-00**	**SWITCH, SLIDE**
1003	**1-548-100-11**	**TIMER**
1004	1-608-067-00	PRINTED CIRCUIT BOARD, ST-22
1005	**3-531-576-01**	**RIVET**
1006	3-677-773-00	COVER (P), ST
1007	3-677-144-00	COVER, PROTECTION, ST PCB
1008	3-677-145-00	HOLDER, ST PC BOARD
1009	**3-677-727-00**	**PLATE, SWITCH**
1010	3-680-806-00	LABEL, DOLBY (C)

NOTE:

1. **The shaded and ⚠-marked components are critical to safety. Replace only with same components as specified.**
2. Parts printed in **Bold-Face type** are normally stocked for replacement purposes. The remaining parts shown in this manual are not normally required for routine service work.. Orders for parts not shown in Bold-Face type will be processed, but allow for additional delivery time.
3. Item with no part number and/or no description are not stocked because they are seldom required for routine service.

No.	Parts No.	Description
1101	A-6725-295-A	MOUNTED CIRCUIT BOARD, MB-41
1102	A-6725-296-A	MOUNTED CIRCUIT BOARD, MB-42
1103	**X-4838-902-X**	**FOOT**
1104	1-560-919-31	CONNECTOR, CARD 60P
1105	3-650-537-00	WASHER
1106	3-677-117-00	GUIDE, MOTHER
1107	3-677-120-00	BRACKET, HM
1108	3-677-123-00	GUIDE (L), PCB
1109	3-677-124-00	JOINT (B)
1110	3-677-733-00	LABEL (1), PC BOARD
1111	3-677-734-00	LABEL (2), PC BOARD
1112	3-677-735-00	LABEL (3), PC BOARD
1113	3-677-736-00	LABEL (4), PC BOARD
1114	3-677-737-00	BRACKET, S-MB
1115	3-677-738-00	HOLDER (SF), CONNECTOR
1116	3-677-739-00	HOLDER (SR), CONNECTOR
1117	3-677-740-00	GUIDE (S), PC BOARD

Chassis Block (1)

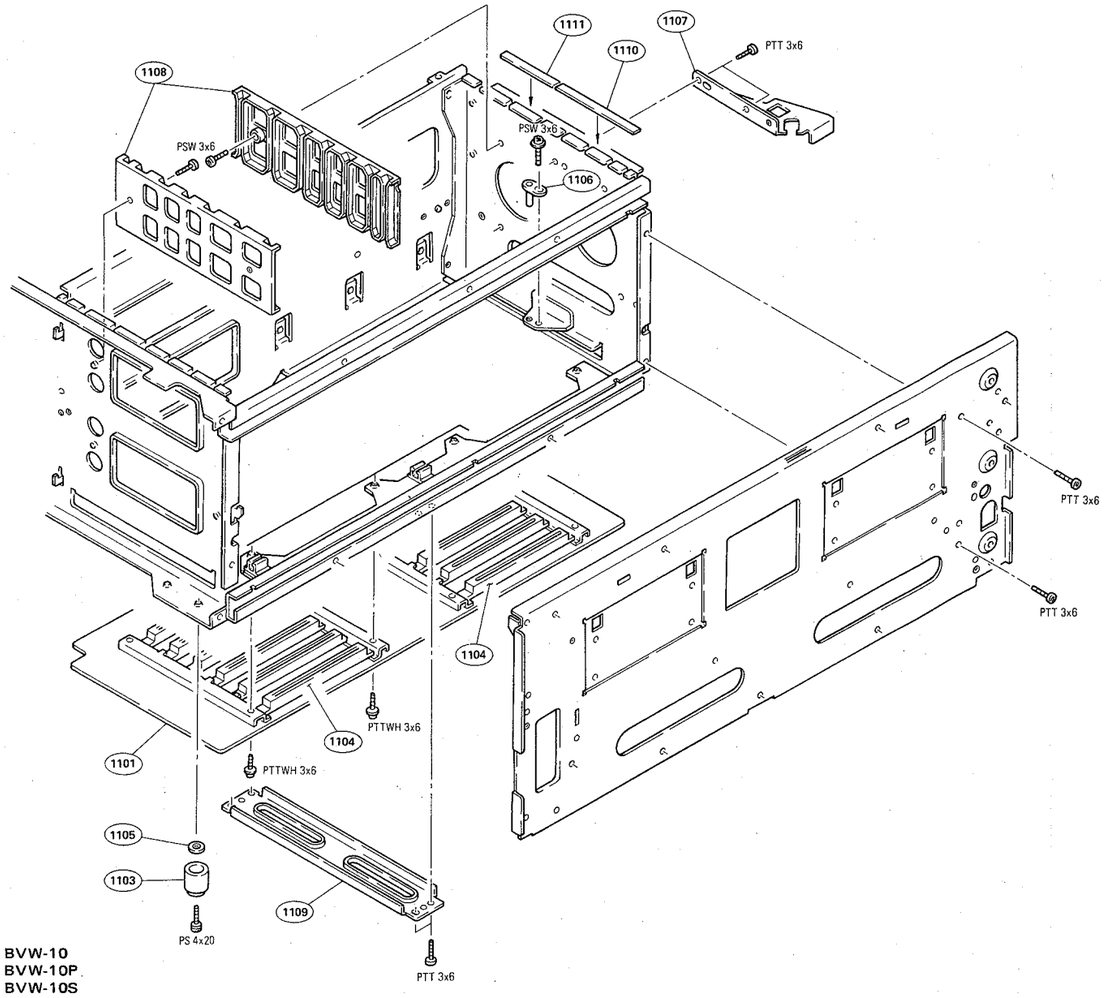

No.	Parts No.	Description
1101	A-6725-295-A	MOUNTED CIRCUIT BOARD, MB-41
1102	A-6725-296-A	MOUNTED CIRCUIT BOARD, MB-42
1103	**X-4838-902-X**	**FOOT**
1104	1-560-919-31	CONNECTOR, CARD 60P
1105	3-650-537-00	WASHER
1106	3-677-117-00	GUIDE, MOTHER
1107	3-677-120-00	BRACKET, HM
1108	3-677-123-00	GUIDE (L), PCB
1109	3-677-124-00	JOINT (B)
1110	3-677-733-00	LABEL (1), PC BOARD
1111	3-677-734-00	LABEL (2), PC BOARD
1112	3-677-735-00	LABEL (3), PC BOARD
1113	3-677-736-00	LABEL (4), PC BOARD
1114	3-677-737-00	BRACKET, S-MB
1115	3-677-738-00	HOLDER (SF), CONNECTOR
1116	3-677-739-00	HOLDER (SR), CONNECTOR
1117	3-677-740-00	GUIDE (S), PC BOARD

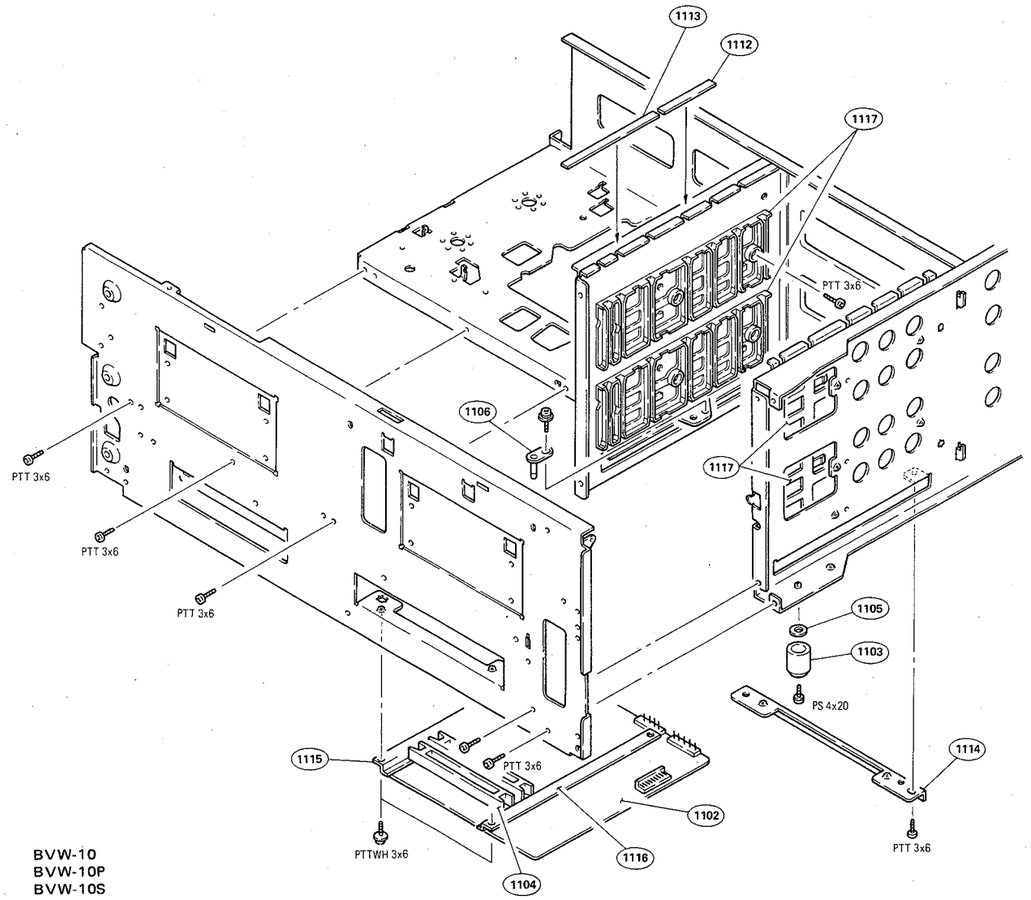

NOTE:

1. **The shaded and ⚠ -marked components are critical to safety.**
   Replace only with same components as specified.
2. Parts printed in **Bold-Face type** are normally stocked for replacement purposes. The remaining parts shown in this manual are not normally required for routine service work. Orders for parts not shown in Bold-Face type will be processed, but allow for additional delivery time.
3. Item with no part number and/or no description are not stocked because they are seldom required for routine service.

Switching Regulator
Switching regulator (UR-06)
Switching regulator (UR-07)

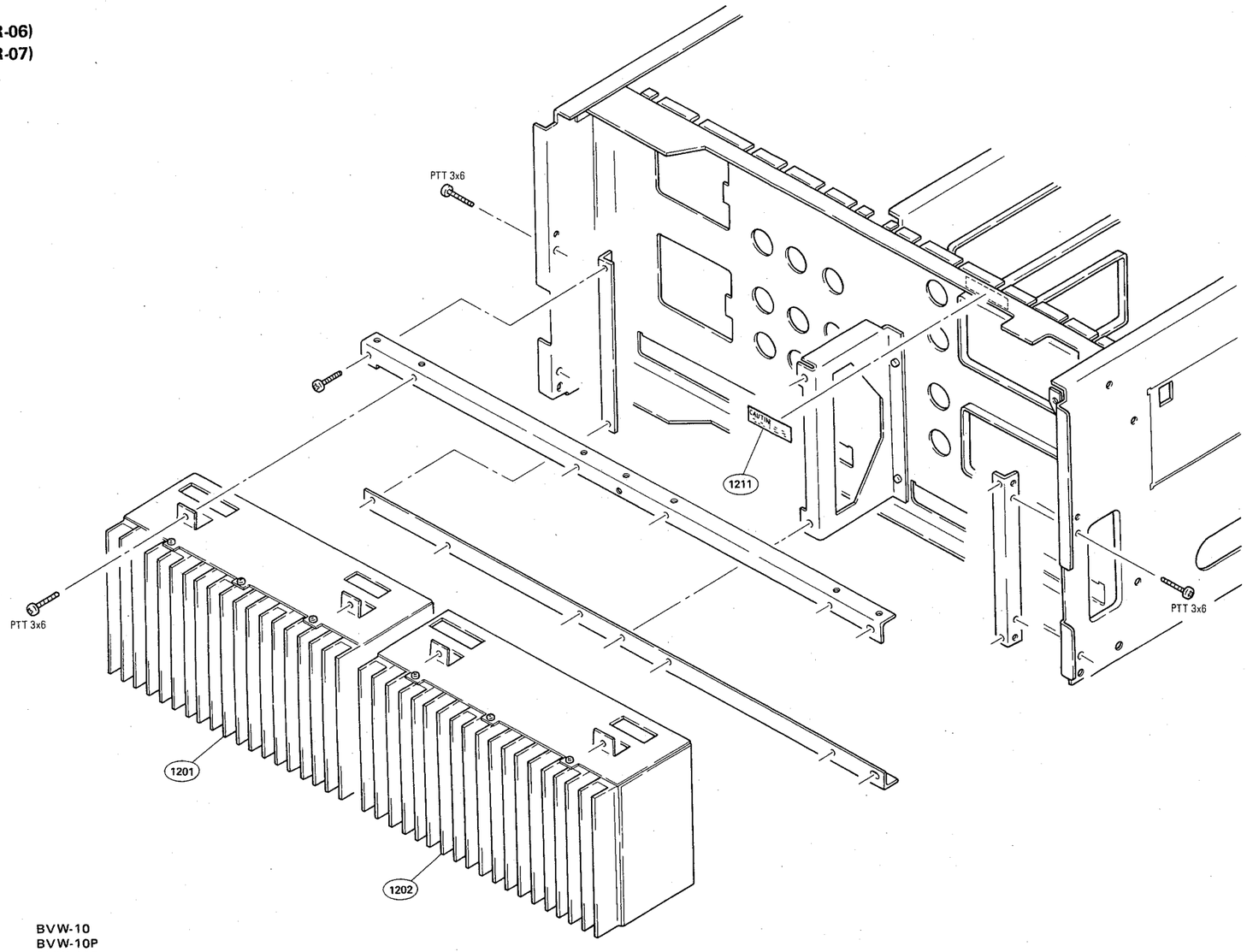

BVW-10
BVW-10P
BVW-10S

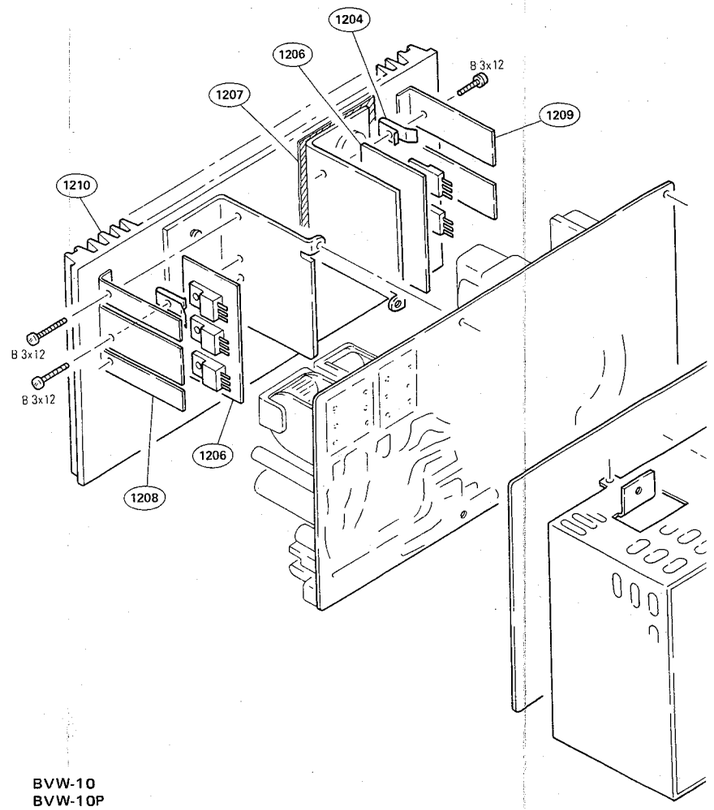

BVW-10
BVW-10P
BVW-10S

No.	Parts No.	Description
⚠1201	**1-413-119-00**	**SWITCHING REGULATOR (UR-06)**
⚠1202	**1-413-120-00**	**SWITCHING REGULATOR (UR-07)**
1203	2-403-507-00	CASE
1204	2-430-683-00	SPRING
1205	2-430-684-00	INSULATOR
1206	2-430-221-00	RUBBER, INSULATING
1207	2-430-679-00	RUBBER, INSULATING
1208	2-430-828-00	RETAINER, SEMICONDUCTOR
1209	2-430-790-00	RETAINER, SEMICONDUCTOR
1210	2-430-964-00	HEAT SINK
1211	3-703-044-26	LABEL, CAUTION

NOTE:

1. **The shaded and ⚠-marked components are critical to safety. Replace only with same components as specified.**
2. Parts printed in **Bold-Face type** are normally stocked for replacement purposes. The remaining parts shown in this manual are not normally required for routine service work. Orders for parts not shown in Bold-Face type will be processed, but allow for additional delivery time.
3. Item with no part number and/or no description are not stocked because they are seldom required for routine service.

SWITCHING REGULATOR

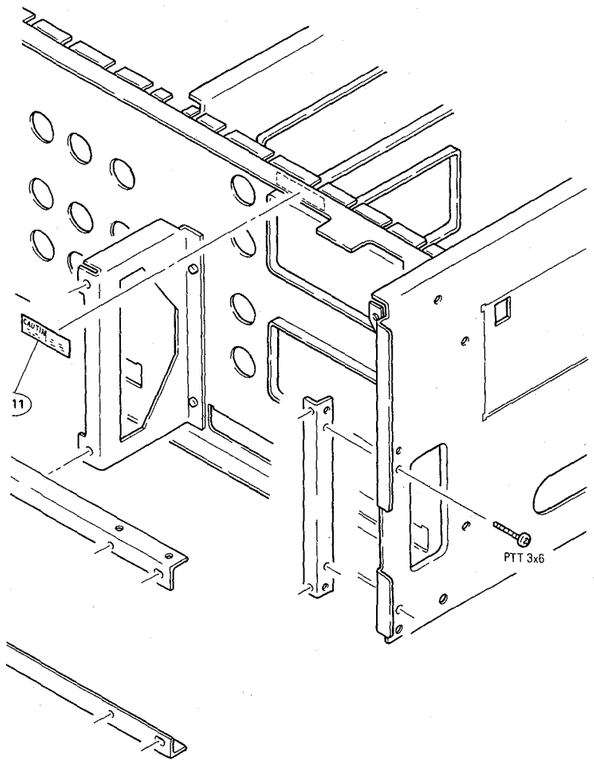

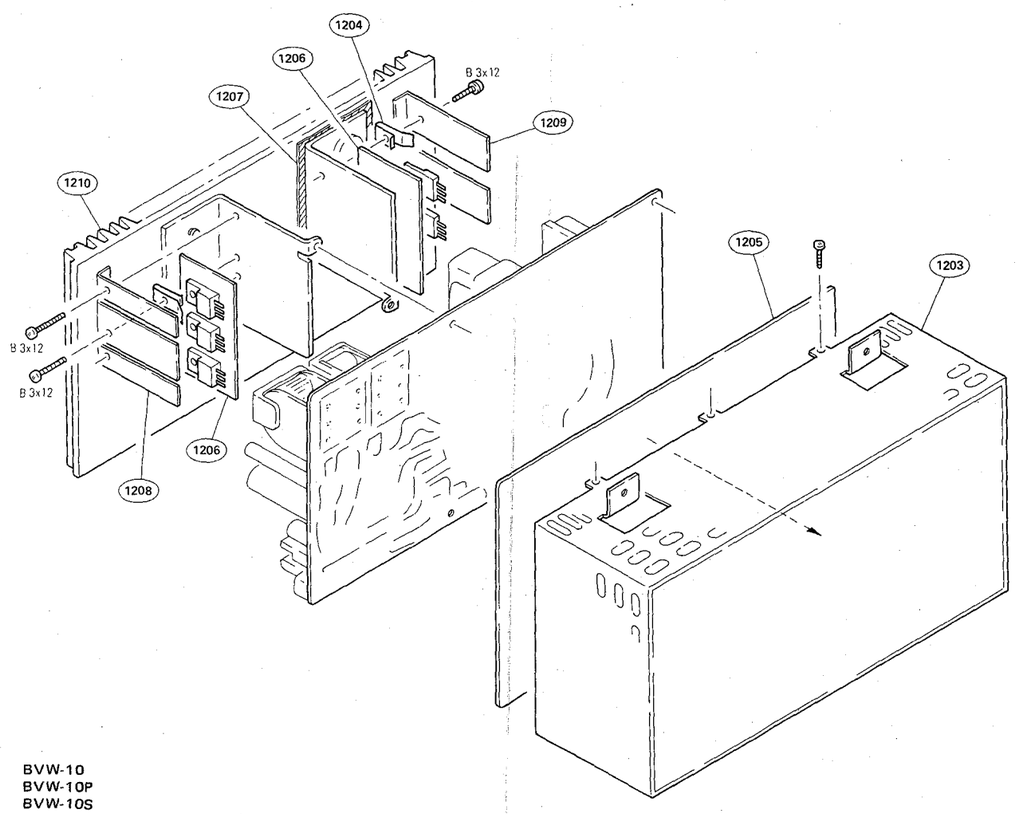

BVW-10
BVW-10P
BVW-10S

NOTE:

1. The shaded and ⚠ -marked components are critical to safety.
   Replace only with same components as specified.
2. Parts printed in Bold-Face type are normally stocked for replacement purposes. The remaining parts shown in this manual are not normally required for routine service work. Orders for parts not shown in Bold-Face type will be processed, but allow for additional delivery time.
3. Item with no part number and/or no description are not stocked because they are seldom required for routine service.

Switching Regulator
Switching regulator (UR-06)
Switching regulator (UR-07)

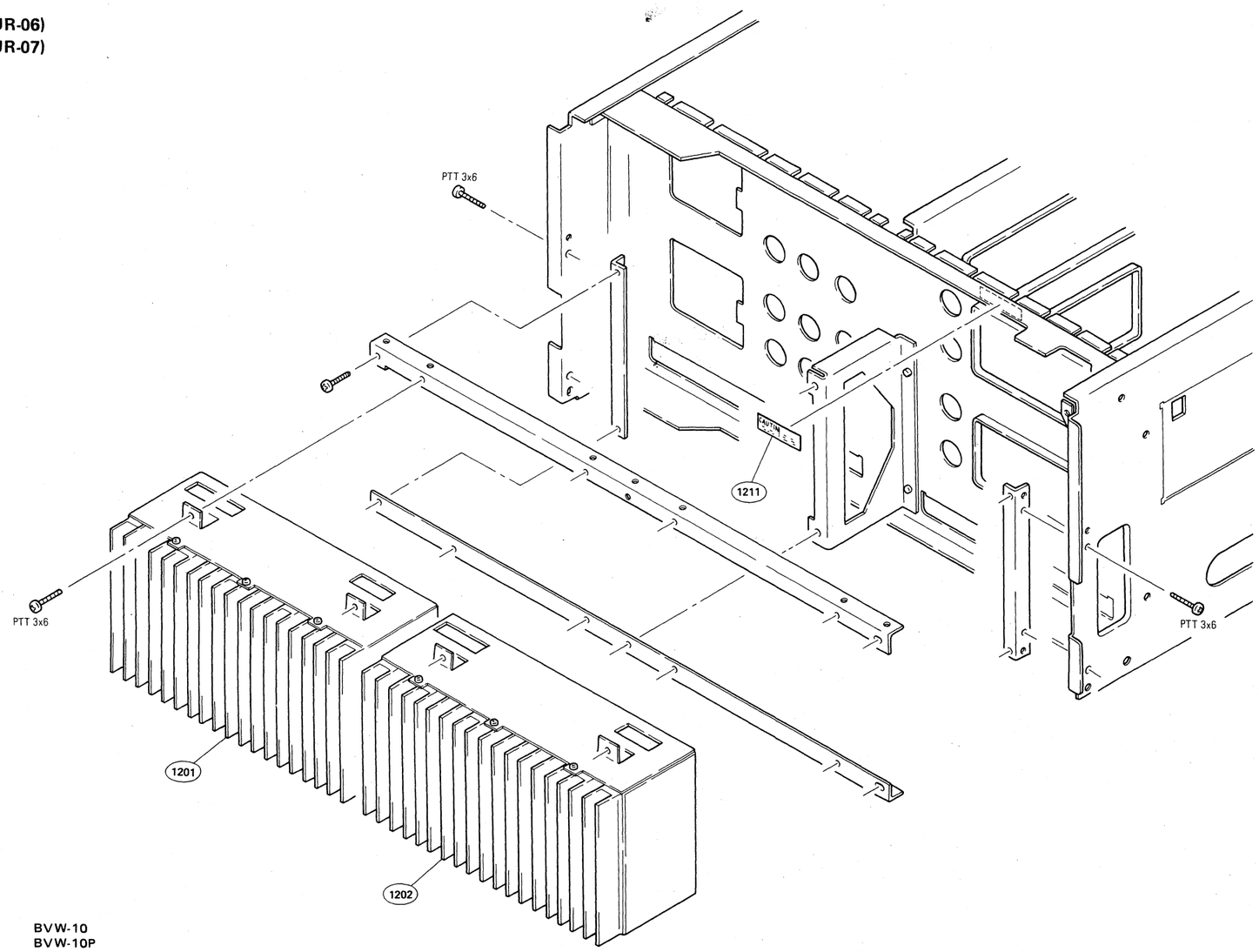

BVW-10
BVW-10P
BVW-10S

No.	Parts No.	Description
⚠1201	**1-413-119-00**	**SWITCHING REGULATOR (UR-06)**
⚠1202	**1-413-120-00**	**SWITCHING REGULATOR (UR-07)**
1203	2-403-507-00	CASE
1204	2-430-683-00	SPRING
1205	2-430-684-00	INSULATOR
1206	2-430-221-00	RUBBER, INSULATING
1207	2-430-679-00	RUBBER, INSULATING
1208	2-430-828-00	RETAINER, SEMICONDUCTOR
1209	2-430-790-00	RETAINER, SEMICONDUCTOR
1210	2-430-964-00	HEAT SINK
1211	3-703-044-26	LABEL, CAUTION

NOTE:

1. **The shaded and ⚠-marked components are critical to safety. Replace only with same components as specified.**
2. Parts printed in **Bold-Face type** are normally stocked for replacement purposes. The remaining parts shown in this manual are not normally required for routine service work. Orders for parts not shown in Bold-Face type will be processed, but allow for additional delivery time.
3. Item with no part number and/or no description are not stocked because they are seldom required for routine service.

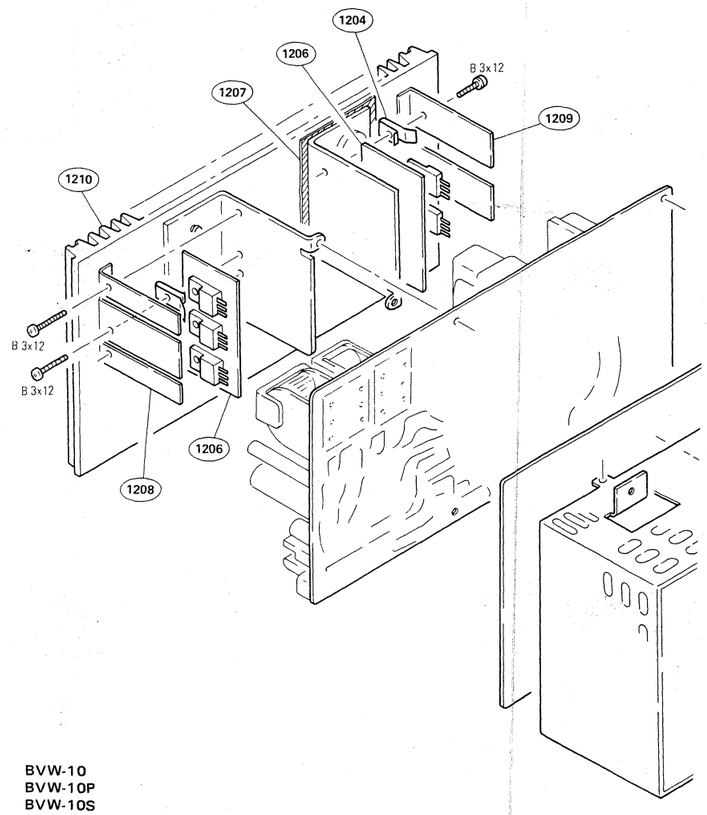

BVW-10
BVW-10P
BVW-10S

SWITCHING REGULATOR

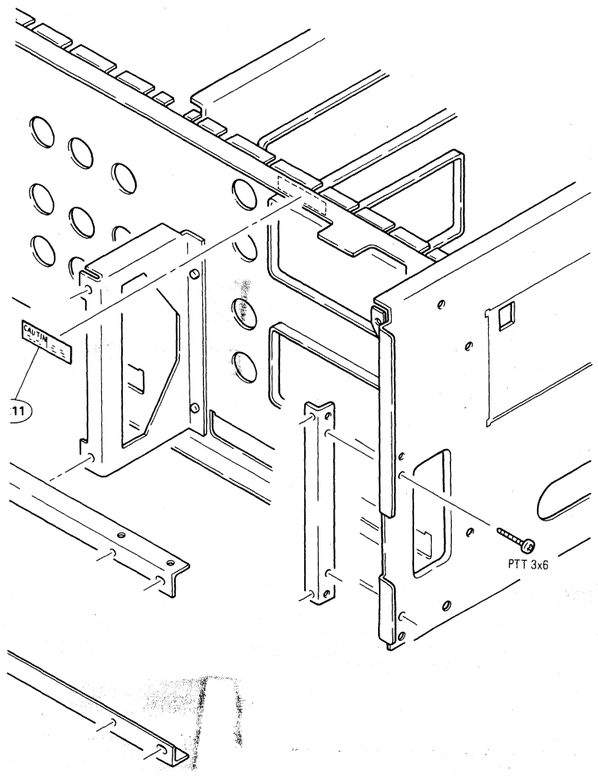

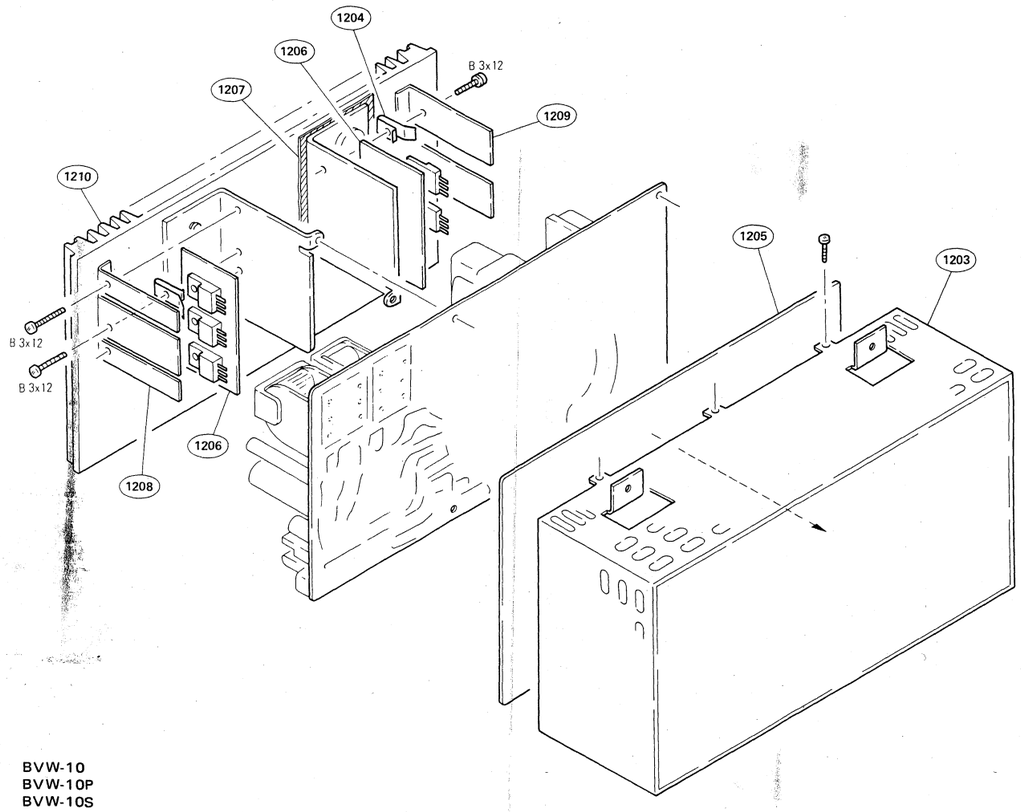

BVW-10
BVW-10P
BVW-10S

NOTE:

1. **The shaded and ⚠ -marked components are critical to safety.**
   Replace only with same components as specified.
2. Parts printed in **Bold-Face type** are normally stocked for replacement purposes. The remaining parts shown in this manual are not normally required for routine service work. Orders for parts not shown in Bold-Face type will be processed, but allow for additional delivery time.
3. Item with no part number and/or no description are not stocked because they are seldom required for routine service.

Cassette-up Compartment

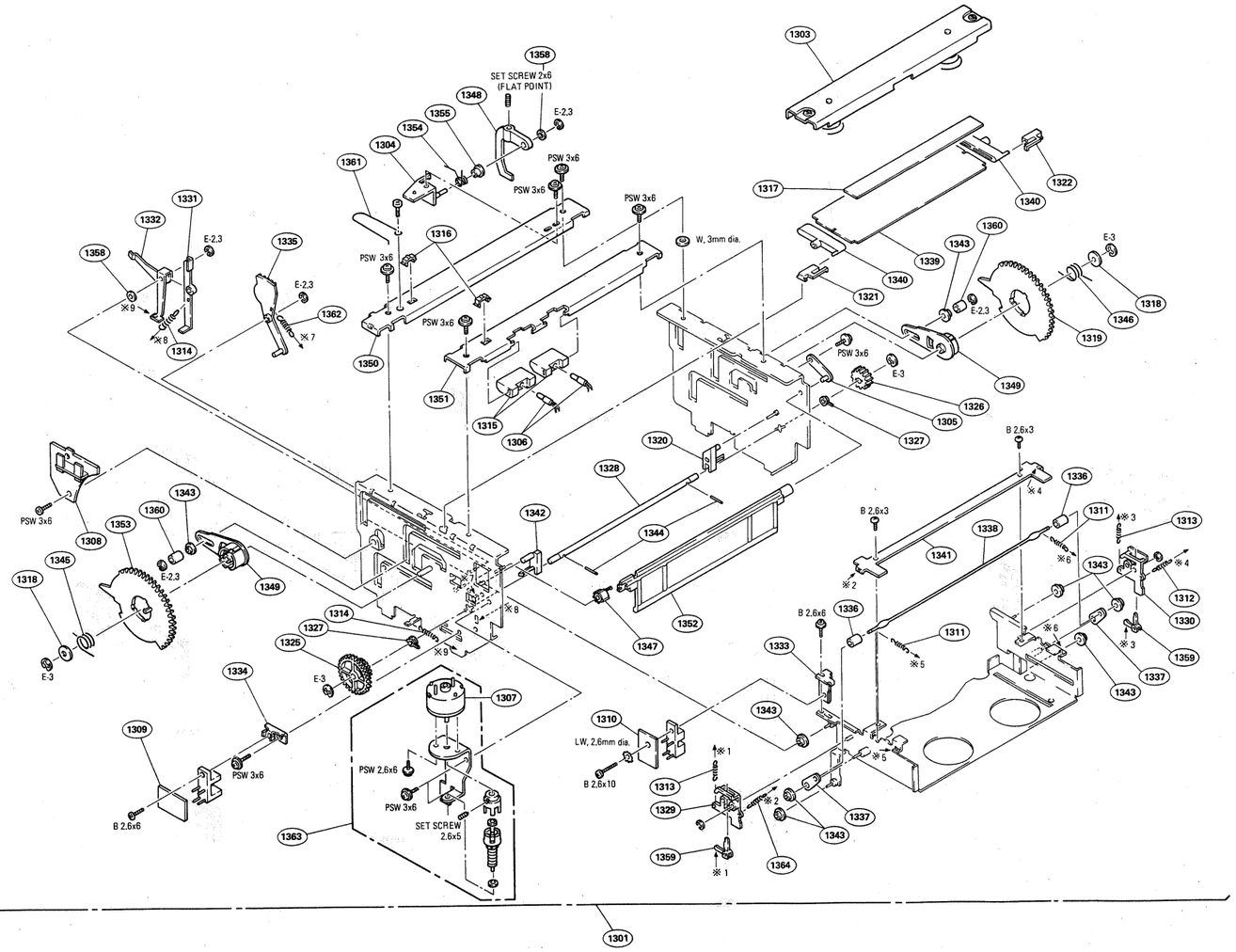

BVW-10
BVW-10P
BVW-10S

No.	Parts No.	Description
1301	**A-6751-151-C**	**CASSETTE COMPARTMENT ASS'Y**
1303	**X-3675-819-0**	**STAY ASS'Y, CASSETTE COMPARTMENT**
1304	X-3675-820-0	BRACKET ASS'Y, LEVER
1305	X-3675-821-2	BRACKET ASS'Y, WINDOW
1306	**1-518-508-00**	**LAMP, PILOT**
1307	**1-541-163-00**	**MOTOR**
1308	1-608-052-00	PRINTED CIRCUIT BOARD, CL-7
1309	1-608-070-00	PRINTED CIRCUIT BOARD, PC-17
1310	1-608-071-00	PRINTED CIRCUIT BOARD, PC-18
1311	**3-465-159-XX**	**SPRING, TENSION (20T)**
1312	**3-563-104-00**	**SPRING, TENSION**
1313	**3-568-321-00**	**SPRING, TENSION**
1314	**3-646-214-00**	**SPRING**
1315	**3-668-314-02**	**HOLDER, LAMP**
1316	3-677-153-00	HOLDER
1317	3-677-154-00	PLATE, PREVENTION
1318	3-677-155-00	RETAINER, SPRING
1319	**3-677-156-00**	**GEAR (R), DRIVING**
1320	3-677-157-00	STOPPER (R), CASSETTE
1321	3-677-160-00	HINGE (LEFT)
1322	3-677-161-00	HINGE (RIGHT)
1325	**3-677-165-03**	**GEAR, MIDWAY**
1326	**3-677-166-00**	**GEAR, JOINT**
1327	3-677-167-00	BEARING
1328	3-677-168-00	JOINT
1329	**3-677-171-00**	**LEVER (LEFT)**
1330	3-677-172-00	LEVER (RIGHT)
1331	3-677-173-00	LEVER, DETECTION, CASSETTE
1332	3-677-174-00	LEVER, DETECTION, CASSETTE-DOWN
1333	3-677-175-00	BRACKET, IN SWITCH
1334	3-677-176-02	BRACKET, DOWN SWITCH
1335	**3-677-177-00**	**ARM**
1336	3-677-178-00	ROLLER, PRESS
1337	3-677-179-00	ARM, JOINT
1338	3-677-180-00	WIRE, PRESS
1339	3-677-181-00	REFLECTOR
1340	3-677-182-00	HOLDER, REFLECTOR
1341	3-677-184-00	JOINT (M)
1342	3-677-185-00	STOPPER (L), CASSETTE
1343	**3-677-187-00**	**ROLLER, GUIDE**
1344	3-677-193-00	PIN, STOPPER
1345	3-677-197-00	SPRING (LEFT)
1346	3-677-198-00	SPRING (R)
1347	**3-677-199-03**	**GEAR**
1348	**3-677-704-03**	**LEVER**
1349	**3-677-706-00**	**ARM, DRIVING**
1350	3-677-707-00	JOINT (R)
1351	3-677-708-00	JOINT (F)
1352	3-677-710-00	LID, CASSETTE
1353	**3-677-711-00**	**GEAR (L), DRIVING**
1354	3-677-726-00	SPRING
1355	3-677-748-00	COLLAR
1358	**3-701-439-21**	**WASHER, POLY 3MM DIA. 0.5T**
1359	3-677-770-00	LEVER
1360	3-677-771-00	COLLAR, GUIDE ROLLER
1361	3-677-779-00	GUARD, HARNESS
1362	**3-646-214-00**	**SPRING**
		UP TO S/N 10150
	3-536-248-XX	**SPRING, TENSION (20T)**
		S/N 10151 AND LATER
1363	**A-6751-170-B**	**BLOCK ASS'Y, MOTOR**
1364	**3-578-389-00**	**SPRING, TENSION**

NOTE:

1. **The shaded and ⚠-marked components are critical to safety. Replace only with same components as specified.**
2. Parts printed in **Bold-Face type** are normally stocked for replacement purposes. The remaining parts shown in this manual are not normally required for routine service work. Orders for parts not shown in Bold-Face type will be processed, but allow for additional delivery time.
3. Item with no part number and/or no description are not stocked because they are seldom required for routine service.

ORNAMENTAL PANEL (1)

Ornamental Panel Block (1)

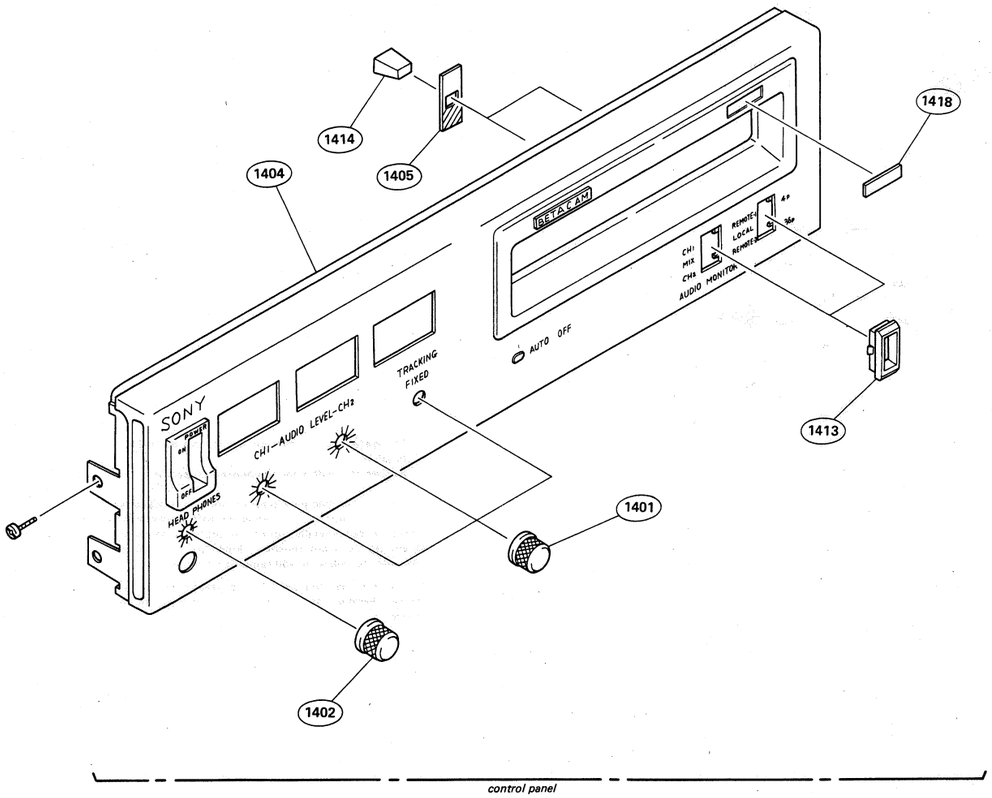

BVW-10
BVW-10P
BVW-10S

No.	Parts No.	Description
1401	**X-3661-073-0**	**KNOB ASS'Y, CONTROL**
1402	**X-3668-075-0**	**KNOB ASS'Y, CONTROL**
1403	X-3675-811-0	PANEL SUB ASS'Y, KEY
1404	X-3675-812-2	PANEL SUB ASS'Y, FRONT
1405	2-252-623-00	PLATE, SWITCH, LEVER
1406	3-657-986-00	GUARD, REC
1407	**3-668-008-02**	**PUSH BUTTON (3x5)**
1408	**3-668-009-02**	**PIN, PUSH BUTTON**
1409	**3-668-012-00**	**RUBBER, DIAL KNOB**
1410	**3-668-013-00**	**KNOB, DIAL**
1411	3-668-015-00	PLATE (SMALL), SWITCH, LEVER
1412	3-668-016-00	FRAME (SMALL), ORNAMENTAL
1413	3-668-018-00	FRAME (MIDDLE), ORNAMENTAL
1414	**3-668-028-00**	**KNOB (SMALL), LEVER SWITCH**

ORNAMENTAL PANEL (1)

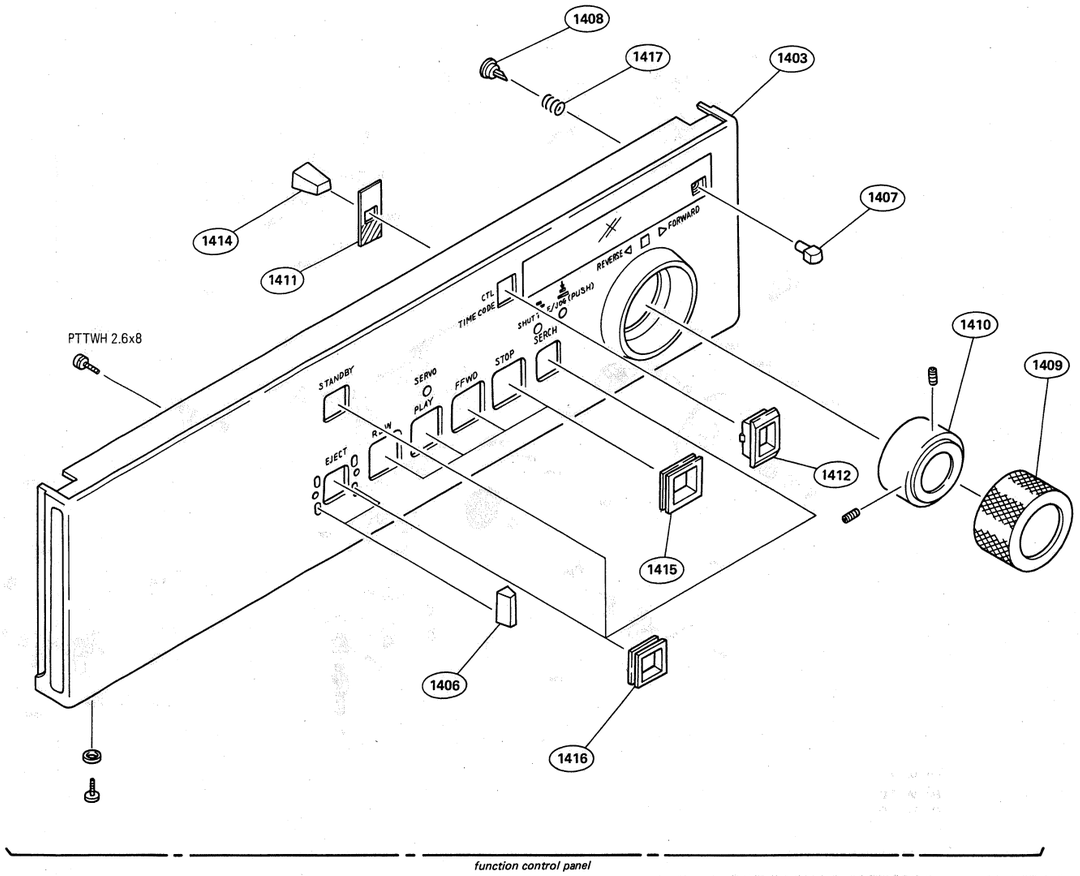

BVW-10
BVW-10P
BVW-10S

No.	Parts No.	Description
1415	3-675-891-00	ESCUTCHEON, BUTTON (LARGE)
1416	3-675-892-00	ESCUTCHEON, BUTTON (SMALL)
1417	**4-309-349-00**	**SPRING, COIL**
1418	3-680-805-11	LABEL, MODEL NUMBER

NOTE:

1. **The shaded and ⚠-marked components are critical to safety. Replace only with same components as specified.**
2. Parts printed in **Bold-Face type** are normally stocked for replacement purposes. The remaining parts shown in this manual are not normally required for routine service work. Orders for parts not shown in Bold-Face type will be processed, but allow for additional delivery time.
3. Item with no part number and/or no description are not stocked because they are seldom required for routine service.

ORNAMENTAL PANEL (2)

ORNAMENTAL PANEL (2)

Ornamental Panel Block (2)

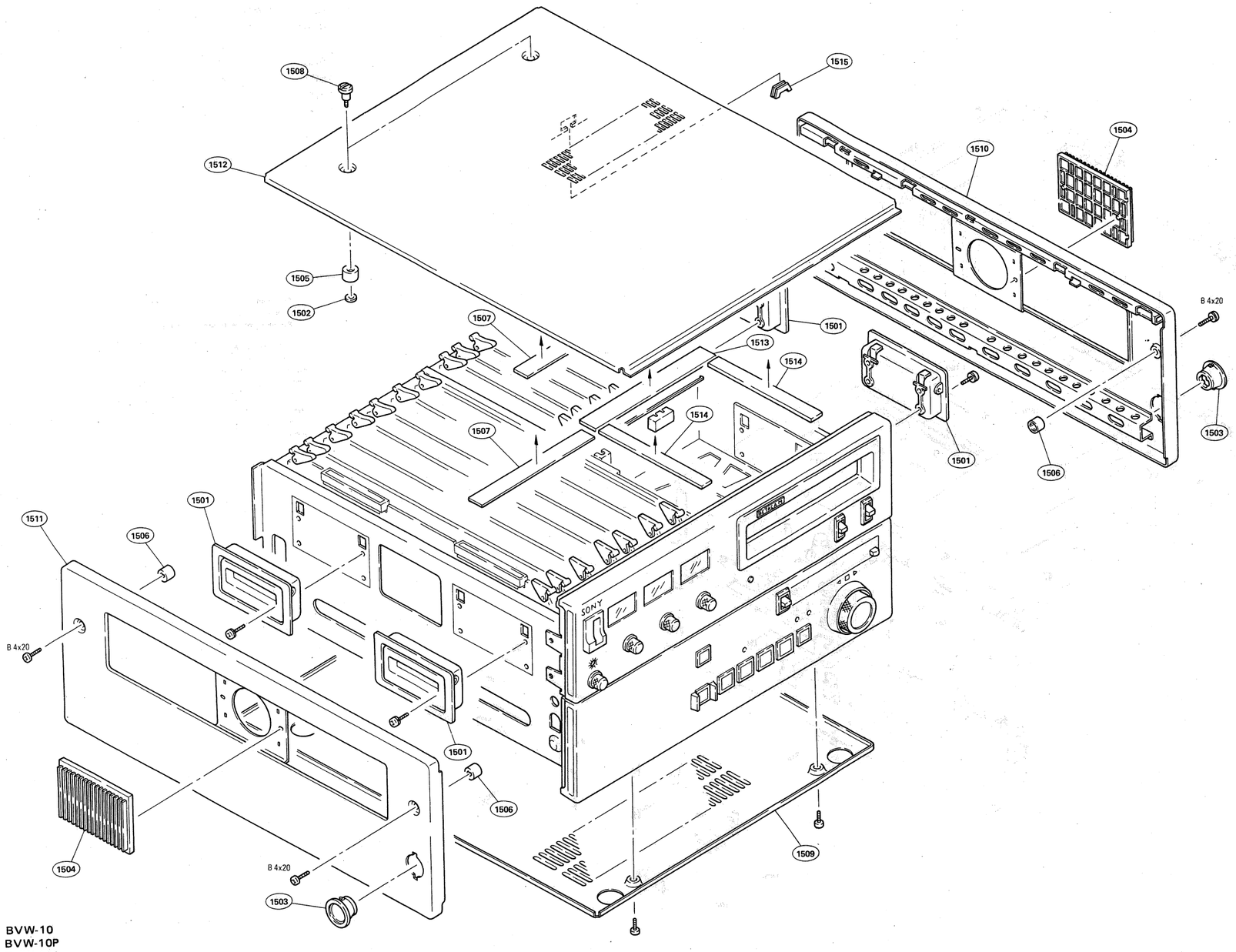

BVW-10
BVW-10P
BVW-10S

No.	Parts No.	Description
1501	X-3642-018-0	HANDLE ASS'Y
1502	3-650-537-00	WASHER
1503	3-668-025-00	ESCUTCHEON, HINGE STOPPER
1504	3-668-335-00	ORNAMENT, SIDE PLATE
1505	3-675-895-00	SPACER, UPPER LID
1506	3-677-101-00	SPACER, M4
1507	**3-677-102-00**	**RETAINER, PC**
1508	**3-677-103-00**	**SCREW, COIN, M4 UPPER LID**
1509	3-677-105-00	PLATE, BOTTOM
1510	3-677-106-00	CABINET (RIGHT)
1511	3-677-107-00	CABINET (LEFT)
1512	3-677-108-00	LID, UPPER UP TO S/N 10150
	3-677-108-05	LID, UPPER S/N 10151 AND LATER
1513	3-677-729-00	CUSHION (LARGE)
1514	3-677-730-00	CUSHION (SMALL)
1515	3-677-781-00	COVER, INSULATING S/N 10151 AND LATER

NOTE:

1. **The shaded and ⚠-marked components are critical to safety.**
   Replace only with same components as specified.
2. Parts printed in **Bold-Face type** are normally stocked for replacement purposes. The remaining parts shown in this manual are not normally required for routine service work. Orders for parts not shown in Bold-Face type will be processed, but allow for additional delivery time.
3. Item with no part number and/or no description are not stocked because they are seldom required for routine service.

PRINTED CIRCUIT BOARD (1)

PRINTED CIRCUIT BOARD (1)

Printed Circuit Board Block (1)

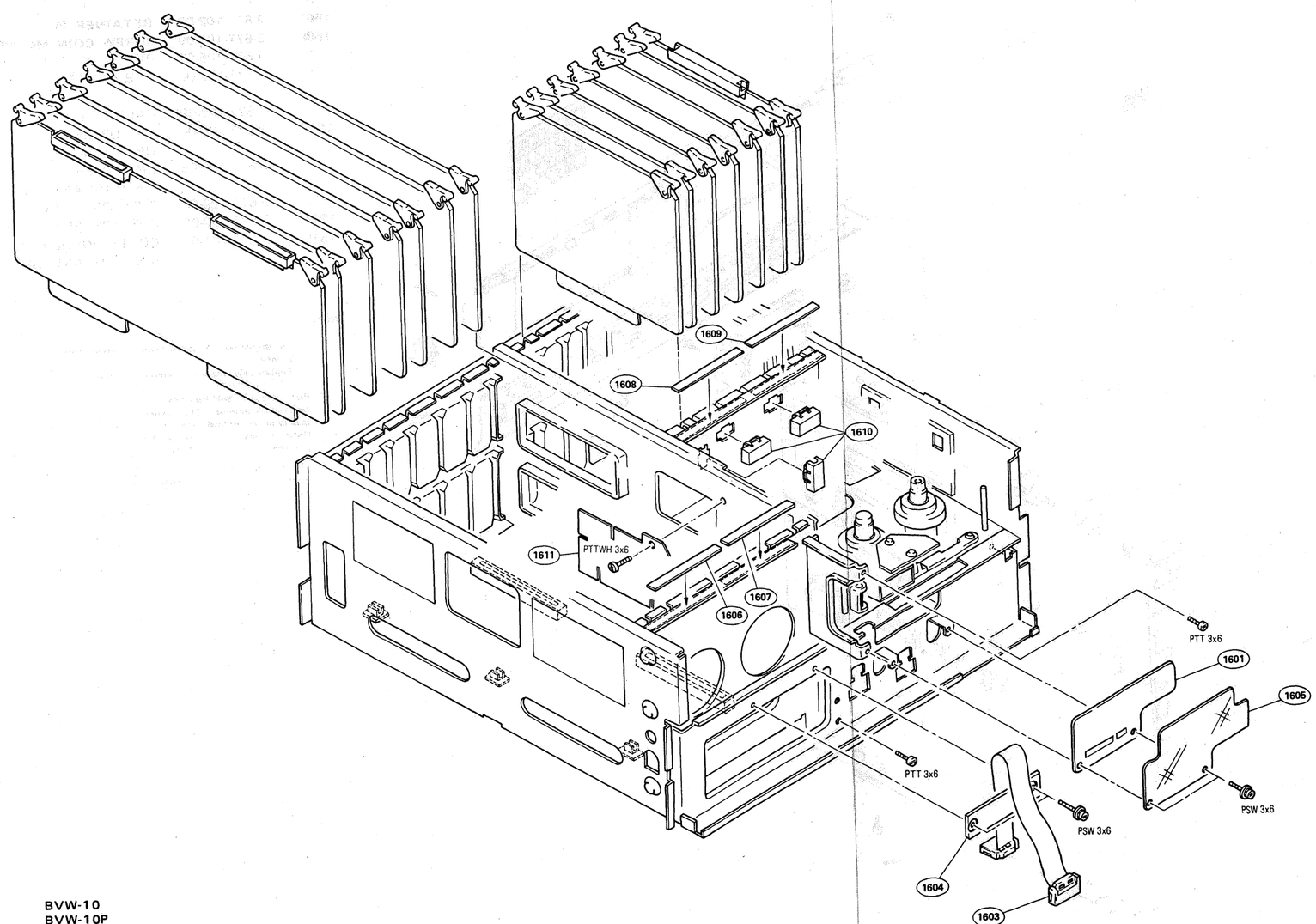

BVW-10
BVW-10P
BVW-10S

No.	Parts No.	Description
1601	A-6715-158-A	MOUNTED CIRCUIT BOARD, DE-12
1603	1-556-458-00	WIRE ASS'Y, FLAT TYPE 16P
1604	3-668-424-00	RETAINER (REAR), FC
1605	3-677-150-00	COVER, DE-12
1606	3-677-733-00	LABEL (1), PC BOARD
1607	3-677-734-00	LABEL (2), PC BOARD
1608	3-677-735-00	LABEL (3), PC BOARD
1609	3-677-736-00	LABEL (4), PC BOARD
1610	3-677-741-00	GUARD, AIR
1611	3-677-742-00	SHEET, SIDE PLATE (M)

NOTE:

1. **The shaded and ⚠-marked components are critical to safety.**
   Replace only with same components as specified.
2. Parts printed in **Bold-Face type** are normally stocked for replacement purposes. The remaining parts shown in this manual are not normally required for routine service work. Orders for parts not shown in Bold-Face type will be processed, but allow for additional delivery time.
3. Item with no part number and/or no description are not stocked because they are seldom required for routine service.

 PRINTED CIRCUIT BOARD (2)

Printed Circuit Board Block (2)

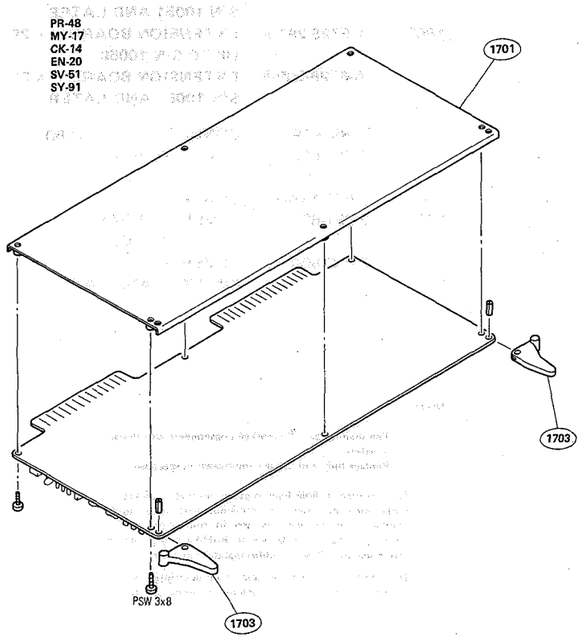

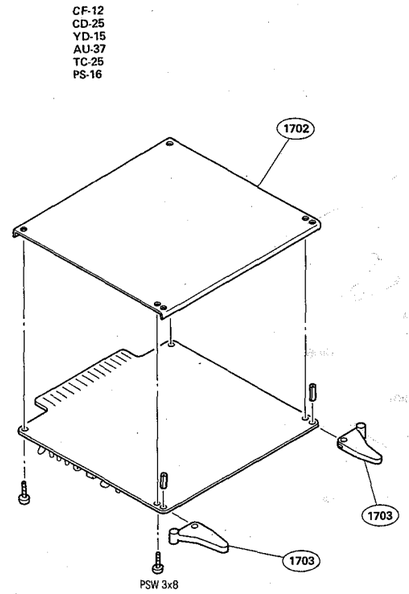

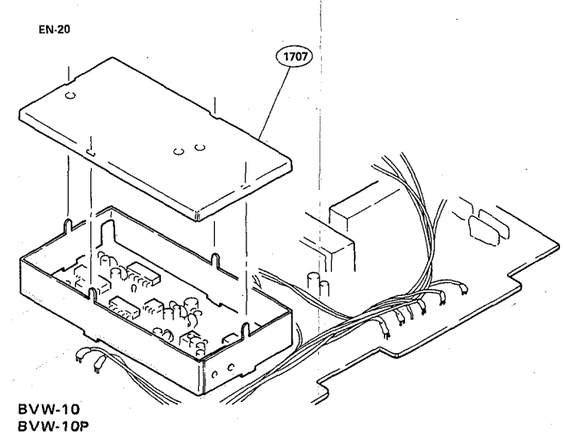

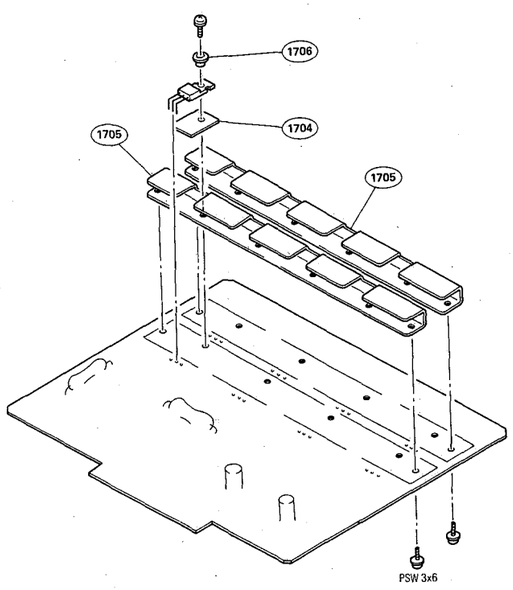

BVW-10
BVW-10P

No.	Parts No.	Description
1701	X-3675-813-0	PLATE ASS'Y, SHIELD, L
1702	X-3675-814-0	PLATE ASS'Y, SHIELD, S
1703	2-251-622-00	LEVER, PC BOARD
1704	**3-660-978-00**	**SHEET, HEAT RESISTING**
1705	3-675-867-00	HEAT SINK
1706	4-026-252-00	WASHER, INSULATING
1707	3-677-763-02	PLATE SHIELD, EN (1-2)

NOTE:

1. **The shaded and ⚠-marked components are critical to safety. Replace only with same components as specified.**
2. Parts printed in **Bold-Face type** are normally stocked for replacement purposes. The remaining parts shown in this manual are not normally required for routine service work. Orders for parts not shown in Bold-Face type will be processed, but allow for additional delivery time.
3. Item with no part number and/or no description are not stocked because they are seldom required for routine service.

EXTENSION BOARD

Extension Board Block

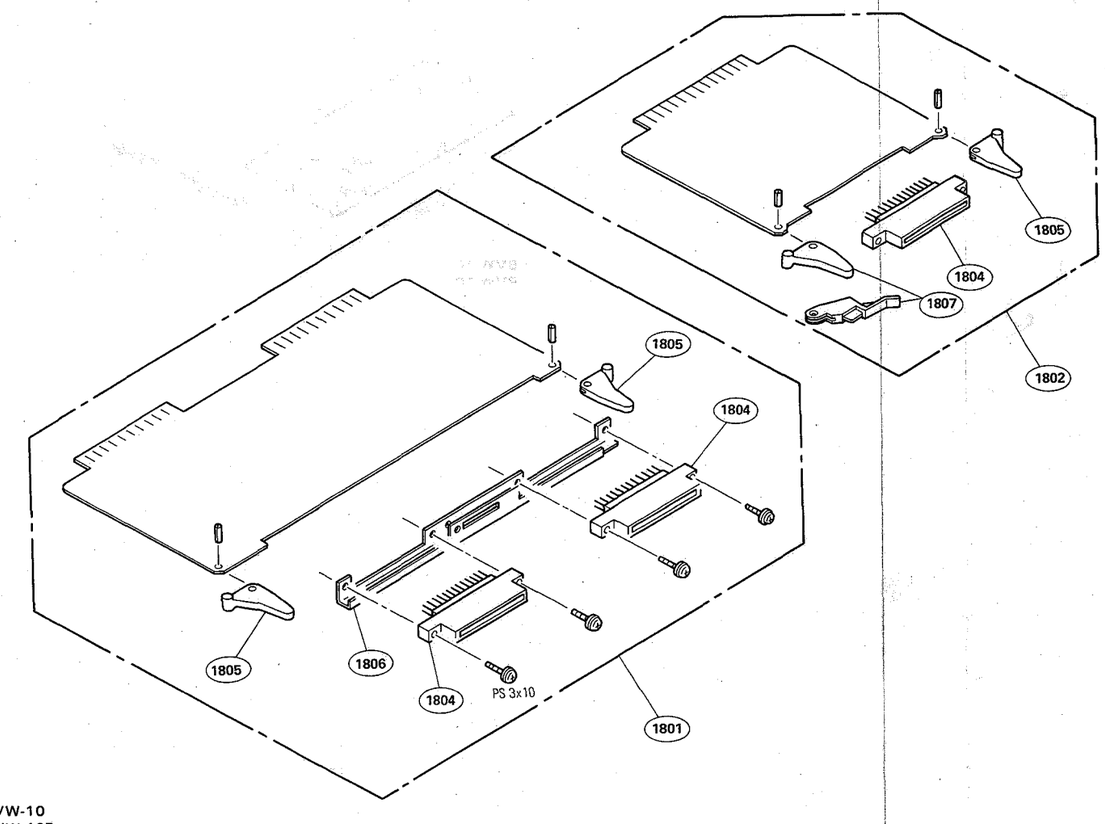

BVW-10
BVW-10P
BVW-10S

No.	Parts No.	Description
1801	**A-6725-282-A**	**EXTENSION BOARD, EX-25 UP TO S/N 10050**
	A-6725-308-A	**EXTENSION BOARD, EX-30 S/N 10051 AND LATER**
1802	**A-6725-297-A**	**EXTENSION BOARD, EX-29 UP TO S/N 10050**
	A-6725-309-B	**EXTENSION BOARD, EX-31 S/N 10051 AND LATER**
1804	1-560-919-21	CONNECTOR, CARD 60P
1805	2-251-622-00	LEVER, PC BOARD
1806	3-677-133-00	BRACKET, EX
1807	2-251-622-00	LEVER, PC BOARD UP TO S/N 10200
	3-680-804-00	LEVER, EX S/N 10201 AND LATER

NOTE:

1. **The shaded and ⚠-marked components are critical to safety. Replace only with same components as specified.**
2. Parts printed in **Bold-Face type** are normally stocked for replacement purposes. The remaining parts shown in this manual are not normally required for routine service work. Orders for parts not shown in Bold-Face type will be processed, but allow for additional delivery time.
3. Item with no part number and/or no description are not stocked because they are seldom required for routine service.

19-3. ELECTRICAL PARTS LIST

Parts that are not listed in the "reference numbers order list" are shown in following table.
Reference numbers are omitted.

CERAMIC CAPACITOR 100pF through 0.01μF (B) 50WV

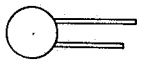

Parts NO. 1-102-□□□-00

Value	Parts No. –□□□–
100pF	106
120	107
150	108
180	109
220	110
270	111
330	112
390	113
470	114
560	115
680	116
820	117

Value	Parts No. –□□□–
0.001μF	074
0.0012	118
0.0015	119
0.0018	120
0.0022	121
0.0027	122
0.0033	123
0.0039	124
0.0047	125
0.0056	126
0.0068	127
0.0082	128
0.01	129

CERAMIC CAPACITOR 0.001μF through 0.1μF 50WV

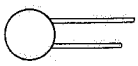

Parts NO. 1-161-□□□-00

Value	Parts No. –□□□–	Substitute
0.001 μF	039	(1-102-074-00)
0.0012	040	
0.0015	041	
0.0018	042	
0.0022	043	(1-102-100-00)
0.0027	044	
0.0033	045	
0.0039	046	(1-102-124-00)
0.0047	047	
0.0056	048	
0.0068	049	
0.0082	050	

Value	Parts No. –□□□–	Substitute
0.01 μF	051	(1-101-118-00)
0.012	052	
0.015	053	
0.018	054	
0.022	055	(1-101-005-00)
0.027	056	
0.033	057	
0.039	058	
0.047	059	(1-101-006-00)
0.056	060	
0.068	061	
0.082	062	
0.1	063	

SILVERED MICA CAPACITOR — 1 pF through 620 pF ±5%, 50WV

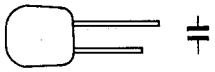

Parts No. 1-107-□□□-00

Value	Parts No. -□□□-	Value	Parts No. -□□□-	Value	Parts No. -□□□-	Value	Parts No. -□□□-
1 pF	098	15 pF	065	51 pF	078	180 pF	091
2	099	16	066	56	079	200	092
3	100	18	067	62	080	220	093
4	101	20	068	68	081	240	094
5	102	22	069	75	082	270	095
6	103	24	070	82	083	300	096
7	104	27	071	91	084	330	097
8	105	30	072	100	085	360	231
9	106	33	073	110	086	390	232
10	061	36	074	120	087	430	233
11	062	39	075	130	088	470	234
12	063	43	076	150	089	510	235
13	064	47	077	160	090	560	236
						620	237

ELECTROLYTIC CAPACITOR — 0.47μF through 470μF, 6.3WV through 50 (63, 100)WV

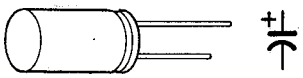

Parts No. 1-123-□□□-00

Value		Parts No. -□□□-	Value		Parts No. -□□□-	Value		Parts No. -□□□-
0.47μF	50V		22μF	35V	342	100μF	50V	360
	100	379		50		220	6.3	
1	50			63	371		10	308
	100	380	33	6.3			16	321
2.2	50			10			25	334
	100	381		16	318		35	346
3.3	25			25			50	361
	35			35	343	330	6.3	
	50			50			10	309
	100	382		63	372		16	322
4.7	25		47	6.3			25	335
	35			10	306		35	347
	50			16			50	362
	63	369		25	332	470	6.3	298
10	10			35			10	310
	16			50	359		16	323
	25		100	6.3			25	336
	35			10	307		35	348
	50	356		16			50	
22	16			25	333		63	377
	25	330		35	345			

METAL FILM RESISTOR ± 1%, 1/4W
10Ω through 100kΩ

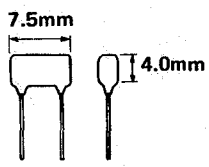

Parts No. 1-214-□□□-00

Value	Parts No. -□□□-	Value	Parts No. -□□□-	Value	Parts No. -□□□-	Value	Parts No. -□□□-
10Ω	084	100Ω	108	1.0kΩ	132	10kΩ	156
11	085	110	109	1.1	133	11	157
12	086	120	110	1.2	134	12	158
13	087	130	111	1.3	135	13	159
15	088	150	112	1.5	136	15	160
16	089	160	113	1.6	137	16	161
18	090	180	114	1.8	138	18	162
20	091	200	115	2.0	139	20	163
22	092	220	116	2.2	140	22	164
24	093	240	117	2.4	141	24	165
27	094	270	118	2.7	142	27	166
30	095	300	119	3.0	143	30	167
33	096	330	120	3.3	144	33	168
36	097	360	121	3.6	145	36	169
39	098	390	122	3.9	146	39	170
43	099	430	123	4.3	147	43	171
47	100	470	124	4.7	148	47	172
51	101	510	125	5.1	149	51	173
56	102	560	126	5.6	150	56	174
62	103	620	127	6.2	151	62	175
68	104	680	128	6.8	152	68	176
75	105	750	129	7.5	153	75	177
82	106	820	130	8.2	154	82	178
91	107	910	131	9.1	155	91	179
						100	180

CARBON RESISTOR (1/4W)

±5%, 1/4W, non-special type
1 Ω through 1 MΩ

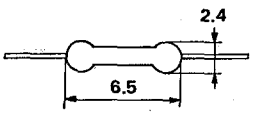

Parts No. 1-246-□□□-00

Value	Parts No. -□□□-	Value	Parts No. -□□□-	Value	Parts No. -□□□-	Value	Parts No. -□□□-
1 Ω	401	33 Ω	437	1 kΩ	473	33 kΩ	509
1.1	402	36	438	1.1	474	36	510
1.2	403	39	439	1.2	475	39	511
1.3	404	43	440	1.3	476	43	512
1.5	405	47	441	1.5	477	47	513
1.6	406	51	442	1.6	478	51	514
1.8	407	56	443	1.8	479	56	515
2	408	62	444	2	480	62	516
2.2	409	68	445	2.2	481	68	517
2.4	410	75	446	2.4	482	75	518
2.7	411	82	447	2.7	483	82	519
3	412	91	448	3.0	484	91	520
3.3	413	100 Ω	449	3.3	485	100 kΩ	521
3.6	414	110	450	3.6	486	110	522
3.9	415	120	451	3.9	487	120	523
4.3	416	130	452	4.3	488	130	524
4.7	417	150	453	4.7	489	150	525
5.1	418	160	454	5.1	490	160	526
5.6	419	180	455	5.6	491	180	527
6.2	420	200	456	6.2	492	200	528
6.8	421	220	457	6.8	493	220	529
7.5	422	240	458	7.5	494	240	530
8.2	423	270	459	8.2	495	270	531
9.1	424	300	460	9.1	496	300	532
10 Ω	425	330	461	10 kΩ	497	330	533
11	426	360	462	11	498	360	534
12	427	390	463	12	499	390	535
13	428	430	464	13	500	430	536
15	429	470	465	15	501	470	537
16	430	510	466	16	502	510	538
18	431	560	467	18	503	560	539
20	432	620	468	20	504	620	540
22	433	680	469	22	505	680	541
24	434	750	470	24	506	750	542
27	435	820	471	27	507	820	543
30	436	910	472	30	508	910	544
						1 MΩ	545

CARBON RESISTOR (1/8W)

±5%, 1/8W, non-special type
2.2Ω through 1MΩ

Parts No. 1-246-□□□-00

Value	Parts No. -□□□-
1Ω	–
1.1	–
1.2	–
1.3	–
1.5	–
1.6	–
1.8	–
2	–
2.2	751
2.4	812
2.7	752
3	813
3.3	753
3.6	814
3.9	754
4.3	815
4.7	755
5.1	816
5.6	756
6.2	817
6.8	757
7.5	818
8.2	758
9.1	819
10Ω	759
11	820
12	760
13	821
15	761
16	822
18	762
20	823
22	763
24	824
27	764
30	825

Value	Parts No. -□□□-
33Ω	765
36	826
39	766
43	827
47	767
51	828
56	768
62	829
68	769
75	830
82	770
91	831
100Ω	771
110	832
120	772
130	833
150	773
160	834
180	774
200	835
220	775
240	836
270	776
300	837
330	777
360	838
390	778
430	839
470	779
510	840
560	780
620	841
680	781
750	842
820	782
910	843

Value	Parts No. -□□□-
1kΩ	783
1.1	844
1.2	784
1.3	845
1.5	785
1.6	846
1.8	786
2	847
2.2	787
2.4	848
2.7	788
3.0	849
3.3	789
3.6	850
3.9	790
4.3	851
4.7	791
5.1	852
5.6	792
6.2	853
6.8	793
7.5	854
8.2	794
9.1	855
10kΩ	795
11	856
12	796
13	857
15	797
16	858
18	798
20	859
22	799
24	860
27	800
30	861

Value	Parts No. -□□□-
33kΩ	801
36	862
39	802
43	863
47	803
51	864
56	804
62	865
68	805
75	866
82	806
91	867
100kΩ	807
110	868
120	808
130	869
150	809
160	870
180	810
200	871
220	811

Parts No. 1-247-□□□-00

Value	Parts No. -□□□-
240kΩ	054
270	046
300	055
330	047
360	056
390	048
430	057
470	049
510	058
560	050
620	059
680	051
750	060
820	052
910	061
1MΩ	053

MICRO INDUCTOR

1 μH through 470 μH
±5%

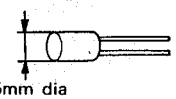

Parts No. 1-407-□□□-XX

Value	Parts No. -□□□-	Value	Parts No. -□□□-	Value	Parts No. -□□□-	Value	Parts No. -□□□-
1 μH	178	4.7 μH	186	22 μH	161	100 μH	169
1.2	179	5.6	187	27	162	120	170
1.5	180	6.8	188	33	163	150	171
1.8	181	8.2	189	39	164	180	172
2.2	182	10	157	47	165	220	173
2.7	183	12	158	56	166	270	174
3.3	184	15	159	68	167	330	175
3.9	185	18	160	82	168	390	176
						470	177

MICRO INDUCTOR

470 μH through 33 mH
±5%

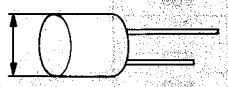

Parts No. 1-407-□□□-00

Value	Parts No. -□□□-	Value	Parts No. -□□□-	Value	Parts No. -□□□-	Value	Parts No. -□□□-
470 μH	488	1.5 mH	494	4.7 mH	500	15 mH	506
560	489	1.8	495	5.6	501	18	507
680	490	2.2	496	6.8	502	22	508
820	491	2.7	497	8.2	503	27	509
1 mH	492	3.3	498	10	504	33	510
1.2	493	3.9	499	12	505		

CONNECTOR

top-type receptacle

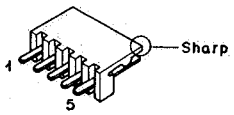

2P	1-508-900-00
3P	1-508-901-00
4P	1-508-902-00
5P	1-508-903-00
6P	1-508-904-00
8P	1-508-905-00
10P	1-508-906-00
12P	1-508-949-00

side-type receptacle

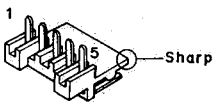

2P	1-508-933-00
3P	1-508-934-00
4P	1-508-950-00
5P	1-508-935-00
6P	1-508-936-00
8P	1-508-937-00
10P	1-508-951-00
12P	1-508-997-00

plug

housing

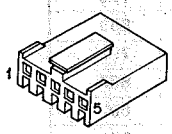

2P	1-509-983-00
3P	1-509-984-00
4P	1-509-985-00
5P	1-509-986-00
6P	1-509-987-00
8P	1-509-988-00
10P	1-509-989-00
12P	1-561-056-00

contact

1-509-982-00

ABBREVIATIONS

Ref. No.	Description	Ref. No.	Description	Ref. No.	Description
C□□, CV□□	CAPACITOR	H□□	HEAD	Q□□	TRANSISTOR
CN□□	CONNECTOR	IC□□	IC	R□□, RV□□	RESISTOR
D□□	DIODE	J□□	JACK	S□□, SW□□	SWITCH
DL□□	DELAY LINE	L□□	INDUCTOR	T□□	TRANSFORMER
DM□□	DME	M□□	MOTOR	TH□□	THERMISTOR
F□□	FUSE	PL□□	LAMP	X□□	CRYSTAL
FB□□	FERRITE BEAD	PH□□	PHOTO INTERRUPTER		
FL□□	FILTER	PM□□	SOLENOID		

All capacitors are in micro farads unless otherwise specified.

All inductors are in micro henries unless otherwise specified.

All resistors are in ohms.

Ref.No.	Parts No.	Description
AC-40 BOARD		
	1-553-037-XX	HOLDER,FUSE
	1-607-968-00	PRINTED CIRCUIT BOARD,AC-40
⚠ C1	1-130-917-00	FILM,0.1 20% 250V
⚠ CN1	1-560-033-00	3P
⚠ F1	1-532-325-00	T6.3A 250V
⚠ L1	1-421-457-00	COIL,LINE FILTER
AU-37 BOARD		
	A-6713-148-A	MOUNTED CIRCUIT BOARD,AU-37
C104	1-107-210-00	MICA 22PF 5% 500V
C105	1-108-583-00	MYLAR 0.015 5% 50V
C107	1-123-829-00	ELECT NONPOLAR 2.2 20% 50V
C138	1-108-607-00	MYLAR 0.15 5% 50V
C204	1-107-210-00	MICA 22PF 5% 500V
C205	1-108-583-00	MYLAR 0.015 5% 50V
C207	1-123-829-00	ELECT NONPOLAR 2.2 20% 50V
C238	1-108-607-00	MYLAR 0.15 5% 50V
C338	1-108-607-00	MYLAR 0.15 5% 50V
D101	8-719-709-25	1S1925-P
D102	8-719-200-02	10E-2
D108	8-719-200-47	10YD4.5B
D201	8-719-709-25	1S1925-P
D202	8-719-200-02	10E-2
D208	8-719-200-47	10YD4.5B
D302	8-719-200-02	10E-2
D401	8-719-100-57	RD10EB2
D402	8-719-100-57	RD10EB2
D404	8-719-815-55	1S1555
D405	8-719-100-30	RD5.1EB2
IC101	8-759-700-04	NJM2043D-D(JRC)
IC102	8-749-925-15	AFL25F15000G1(MURATA)
IC104	8-759-145-57	uPC4557C(NEC)
IC105	8-751-701-13	CX170-13(SONY)
IC202	8-749-925-15	AFL25F15000G1(MURATA)
IC205	8-751-701-13	CX170-13(SONY)
IC305	8-751-701-13	CX170-13(SONY)
IC401	8-759-171-05	uPC7805H(NEC)
IC402	8-759-179-05	uPC7905H(NEC)

NOTES:

1. **The shaded and ⚠-marked components are critical to safety.**
   Replace only with same components as specified.
2. Parts printed in **Bold-Face type** are normally stocked for replacement purposes. The remaining parts shown in this manual are not normally required for routine service work. Orders for parts not shown in Bold-Face type will be processed, but allow for additional delivery time.

Ref.No.	Parts No.	Description
LV101	1-459-434-00	VAR,22mH
LV201	1-459-434-00	VAR,22mH
Q101	8-761-622-00	2SC1636
Q102	8-729-663-47	2SC1364
Q103	8-760-335-10	2SC1474
Q104	8-729-117-54	2SA1175
Q106	8-761-622-00	2SC1636
Q108	8-729-240-01	2SK240
Q201	8-761-622-00	2SC1636
Q202	8-729-663-47	2SC1364
Q203	8-760-335-10	2SC1474
Q204	8-729-117-54	2SA1175
Q206	8-761-622-00	2SC1636
Q208	8-729-240-01	2SK240
Q303	8-760-335-10	2SC1474
Q304	8-729-117-54	2SA1175
Q305	8-729-117-54	2SA1175
Q306	8-761-622-00	2SC1636
Q307	8-761-622-00	2SC1636
Q401	8-729-117-54	2SA1175
Q402	8-729-663-47	2SC1364
Q403	8-729-663-47	2SC1364
Q404	8-729-141-43	2SD414
Q405	8-729-154-83	2SB548
R106	1-212-706-00	METAL 150K 1/2W 1%
R130	1-244-861-00	CARBON 330 1/2W 5%
R206	1-212-706-00	METAL 150K 1/2W 1%
R401	1-212-849-00	FUSIBLE 4.7 1/4W 5%
RV101	1-228-458-00	VAR,5K
RV102	1-228-293-00	VAR,5K
RV103	1-228-295-00	VAR,20K
RV104	1-228-292-00	VAR,2K
RV105	1-228-293-00	VAR,5K
RV106	1-228-463-00	VAR,200K
RV201	1-228-458-00	VAR,5K
RV202	1-228-293-00	VAR,5K
RV203	1-228-295-00	VAR,20K
RV204	1-228-292-00	VAR,2K
RV205	1-228-293-00	VAR,5K
RV206	1-228-463-00	VAR,200K
RV305	1-228-293-00	VAR,5K
S1	1-552-509-00	DIP

Ref.No.	Parts No.	Description
T101	1-423-225-00	OUTPUT
T201	1-423-225-00	OUTPUT
T301	1-423-225-00	OUTPUT
TH101	1-800-200-00	S-3K
TH201	1-800-200-00	S-3K
CD-25	BOARD	
	A-6711-386-A	MOUNTED CIRCUIT BOARD,CD-25
C1	1-107-211-00	MICA 24PF 5% 500V
C7	1-107-210-00	MICA 22PF 5% 500V
C11	1-107-211-00	MICA 24PF 5% 500V
C24	1-107-159-00	MICA 33PF 5% 500V
C30	1-107-157-00	MICA 27PF 5% 500V
C31	1-107-202-00	MICA 10PF 5% 500V
C35	1-107-211-00	MICA 24PF 5% 500V
C42	1-130-471-00	FILM 0.001 5% 50V
C60	1-131-408-00	TANTALUM 1 20% 35V
C61	1-131-408-00	TANTALUM 1 20% 35V
C62	1-131-408-00	TANTALUM 1 20% 35V
C63	1-131-408-00	TANTALUM 1 20% 35V
C64	1-131-408-00	TANTALUM 1 20% 35V
C70	1-109-692-00	DIPPED MICA 620PF 1% 500V
C71	1-107-208-00	MICA 18PF 5% 500V
C75	1-109-676-00	DIPPED MICA 130PF 1% 500V
C80	1-109-673-00	DIPPED MICA 100PF 1% 500V
C81	1-109-681-00	DIPPED MICA 220PF 1% 500V
C86	1-131-408-00	TANTALUM 1 20% 35V
C104	1-109-673-00	DIPPED MICA 100PF 1% 500V
C127	1-130-473-00	FILM 0.0015 5% 50V
D1	8-719-151-07	RD5.1E-B
D2	8-719-815-55	1S1555
D3	8-719-162-07	RD6.2E-B
D4	8-719-191-07	RD9.1E-B
D6	8-719-815-55	1S1555
D7	8-719-815-55	1S1555
DL1	1-415-162-00	1MHz 50nS
FL1	1-235-191-00	LPF

NOTES:

1. **The shaded and ⚠-marked components are critical to safety. Replace only with same components as specified.**

2. Parts printed in **Bold-Face type** are normally stocked for replacement purposes. The remaining parts shown in this manual are not normally required for routine service work. Orders for parts not shown in Bold-Face type will be processed, but allow for additional delivery time.

Ref.No.	Parts No.	Description
IC1	8-751-340-00	CX134A(SONY)
IC2	8-741-114-00	BX1140(SONY)
IC3	8-759-208-94	CX894(SONY)
IC4	8-759-951-07	SN75107AN(TI)
IC5	8-741-110-10	BX1101(SONY)
IC6	8-741-109-80	BX1098(SONY)
IC7	8-749-938-90	BX389(SONY)
IC8	8-749-938-90	BX389(SONY)
IC9	8-759-200-60	TA7060AP(TOSHIBA)
IC10	8-759-200-60	TA7060AP(TOSHIBA)
IC11	8-749-936-61	BX366A(SONY)
IC12	8-759-700-14	NJM78M09A(JRC)
LV1	1-407-568-00	VAR,6.8
LV2	1-407-568-00	VAR,6.8
LV11	1-407-568-00	VAR,6.8
LV12	1-407-568-00	VAR,6.8
Q1	8-724-375-01	2SC403C
Q2	8-724-375-01	2SC403C
Q3	8-724-375-01	2SC403C
Q4	8-724-375-01	2SC403C
Q5	8-724-375-01	2SC403C
Q6	8-761-622-00	2SC1636
Q7	8-724-375-01	2SC403C
Q8	8-729-384-47	2SA844
Q10	8-724-375-01	2SC403C
Q11	8-724-375-01	2SC403C
Q12	8-724-375-01	2SC403C
Q13	8-729-663-47	2SC1364
Q14	8-724-375-01	2SC403C
Q15	8-729-374-02	2SB740
Q16	8-724-375-01	2SC403C
Q20	8-724-375-01	2SC403C
Q21	8-724-375-01	2SC403C
Q22	8-724-375-01	2SC403C
Q23	8-724-375-01	2SC403C
Q25	8-729-190-12	2SC2901
RV1	1-228-292-00	VAR,2K
RV2	1-228-292-00	VAR,2K
RV3	1-228-292-00	VAR,2K
RV4	1-228-291-00	VAR,1K
RV5	1-228-295-00	VAR,20K
RV6	1-228-295-00	VAR,20K
RV7	1-228-293-00	VAR,5K
RV11	1-228-292-00	VAR,2K
RV12	1-228-292-00	VAR,2K
RV70	1-228-291-00	VAR,1K

Ref.No.	Parts No.	Description
RV71	1-228-290-00	VAR,500
RV72	1-228-291-00	VAR,1K
RV73	1-228-288-00	VAR,100
RV74	1-228-288-00	VAR,100
RV75	1-228-291-00	VAR,1K
RV76	1-228-291-00	VAR,1K
TH1	1-800-202-XX	S-10K
CF-12 BOARD		
	A-6711-413-A	MOUNTED CIRCUIT BOARD,CF-12 WITH DU-43 BOARD
	DU-43 BOARD	
	1-610-457-00	PRINTED CIRCUIT BOARD,DU-43
C134	1-107-158-00	MICA 30PF 5% 500V
CN1	1-560-025-00	10P
CN2	1-560-025-00	10P
D4	8-719-911-19	1SS119
Q1	8-724-375-01	2SC403C
Q2	8-729-612-77	2SA1027R
RV20	1-228-293-00	VAR,5K
	CF-12 BOARD	
C5	1-130-495-00	FILM 0.1 5% 50V
C14	1-107-159-00	MICA 33PF 5% 500V
C16	1-107-157-00	MICA 27PF 5% 500V
C18	1-107-157-00	MICA 27PF 5% 500V
C25	1-130-495-00	FILM 0.1 5% 50V
C42	1-107-211-00	MICA 24PF 5% 500V
C43	1-107-211-00	MICA 24PF 5% 500V
C47	1-107-211-00	MICA 24PF 5% 500V
C48	1-107-211-00	MICA 24PF 5% 500V
C119	1-107-159-00	MICA 33PF 5% 500V
D1	8-719-143-07	RD4.3E-B
D2	8-719-143-07	RD4.3E-B
D3	8-719-911-19	1SS119
D105	8-719-709-25	1S1925P

NOTES:

1. **The shaded and ⚠-marked components are critical to safety.**
   Replace only with same components as specified.

2. Parts printed in **Bold-Face type** are normally stocked for replacement purposes. The remaining parts shown in this manual are not normally required for routine service work. Orders for parts not shown in Bold-Face type will be processed, but allow for additional delivery time.

Ref.No.	Parts No.	Description
IC1	8-759-201-40	TL8605P-S(TOSHIBA)
IC2	8-759-201-40	TL8605P-S(TOSHIBA)
IC3	8-759-708-08	NJM78L08A(JRC)
IC4	8-759-906-01	TL601CP(TI)
LV1	1-407-569-00	VAR,10
Q1	8-724-375-01	2SC403C
Q2	8-724-375-01	2SC403C
Q3	8-765-212-20	2SA925
Q4	8-765-212-20	2SA925
Q5	8-724-375-01	2SC403C
Q6	8-729-612-77	2SA1027R
Q7	8-724-375-01	2SC403C
Q8	8-729-612-77	2SA1027R
Q9	8-724-375-01	2SC403C
Q10	8-724-375-01	2SC403C
Q11	8-729-612-77	2SA1027R
Q12	8-724-375-01	2SC403C
Q13	8-729-612-77	2SA1027R
Q14	8-724-375-01	2SC403C
Q15	8-729-612-77	2SA1027R
Q16	8-724-375-01	2SC403C
Q17	8-724-375-01	2SC403C
Q18	8-724-375-01	2SC403C
Q19	8-729-190-12	2SC2901
Q20	8-724-375-01	2SC403C
Q21	8-729-190-12	2SC2901
Q23	8-729-190-12	2SC2901
Q25	8-765-212-20	2SA925
Q27	8-765-212-20	2SA925
Q28	8-729-190-12	2SC2901
Q29	8-729-190-12	2SC2901
Q30	8-729-190-12	2SC2901
Q31	8-724-375-01	2SC403C
Q32	8-729-612-77	2SA1027R
Q33	8-765-212-20	2SA925
Q35	8-729-190-12	2SC2901
Q37	8-729-190-12	2SC2901
Q38	8-765-212-20	2SA925
Q39	8-765-212-20	2SA925
Q40	8-765-212-20	2SA925

Ref.No.	Parts No.	Description
Q41	8-765-212-20	2SA925
Q42	8-765-212-20	2SA925
Q43	8-765-212-20	2SA925
Q44	8-729-190-12	2SC2901
Q45	8-729-190-12	2SC2901
Q46	8-765-212-20	2SA925
Q47	8-729-190-12	2SC2901
Q48	8-729-190-12	2SC2901
Q49	8-729-190-12	2SC2901
Q50	8-765-212-20	2SA925
Q51	8-765-212-20	2SA925
Q52	8-729-190-12	2SC2901
Q53	8-724-375-01	2SC403C
Q54	8-729-612-77	2SA1027R
Q55	8-729-612-77	2SA1027R
Q56	8-724-375-01	2SC403C
RV1	1-228-292-00	VAR,2K
RV2	1-228-294-00	VAR,10K
RV3	1-228-295-00	VAR,20K
RV4	1-228-289-00	VAR,200
RV5	1-228-295-00	VAR,20K
RV6	1-228-292-00	VAR,2K
RV7	1-228-295-00	VAR,20K
RV8	1-228-295-00	VAR,20K
RV9	1-228-295-00	VAR,20K
RV12	1-228-295-00	VAR,20K
RV13	1-228-295-00	VAR,20K
RV14	1-228-292-00	VAR,2K
RV121	1-228-462-00	VAR,100K
RV122	1-228-462-00	VAR,100K
TH1	1-800-194-11	S-90
X1	1-567-076-00	10.700MHz

NOTES:

1. **The shaded and ⚠-marked components are critical to safety. Replace only with same components as specified.**
2. Parts printed in **Bold-Face type** are normally stocked for replacement purposes. The remaining parts shown in this manual are not normally required for routine service work. Orders for parts not shown in Bold-Face type will be processed, but allow for additional delivery time.

Ref.No.	Parts No.	Description
CK-14 BOARD		
	A-6711-430-A	MOUNTED CIRCUIT BOARD,CK-14
C2	1-130-471-00	FILM 0.001 5% 50V
C18	1-109-535-00	DIPPED MICA 100PF 5% 100V
C23	1-109-537-00	DIPPED MICA 120PF 5% 100V
C30	1-130-020-00	FILM 0.0015 5% 50V
C33	1-109-526-00	DIPPED MICA 43PF 5% 100V
C36	1-109-539-00	DIPPED MICA 150PF 5% 100V
C43	1-131-345-00	TANTALUM 0.47 10% 35V
C44	1-131-345-00	TANTALUM 0.47 10% 35V
C48	1-130-471-00	FILM 0.001 5% 50V
C51	1-131-347-00	TANTALUM 1.0 10% 35V
C52	1-131-347-00	TANTALUM 1.0 10% 35V
C53	1-130-020-00	FILM 0.0015 5% 50V
C55	1-109-526-00	DIPPED MICA 43PF 5% 100V
C60	1-130-489-00	FILM 0.033 5% 50V
C63	1-130-471-00	FILM 0.001 5% 50V
C76	1-131-373-00	TANTALUM 22 10% 16V
C78	1-130-477-00	FILM 0.0033 5% 50V
C89	1-109-545-00	DIPPED MICA 270PF 5% 100V
C90	1-130-853-00	FILM 0.0047 5% 100V
C123	1-109-549-00	DIPPED MICA 390PF 5% 100V
C125	1-109-528-00	DIPPED MICA 51PF 5% 100V
C126	1-109-531-00	DIPPED MICA 68PF 5% 100V
C136	1-130-020-00	FILM 0.0015 5% 50V
C139	1-131-349-00	TANTALUM 2.2 10% 35V
C140	1-130-020-00	FILM 0.0015 5% 50V
C141	1-109-525-00	DIPPED MICA 39PF 5% 100V
C146	1-109-539-00	DIPPED MICA 150PF 5% 100V
C157	1-130-471-00	FILM 0.001 5% 50V
C159	1-131-347-00	TANTALUM 1.0 10% 35V
C160	1-131-347-00	TANTALUM 1.0 10% 35V
C163	1-109-525-00	DIPPED MICA 39PF 5% 100V
C167	1-130-489-00	FILM 0.033 5% 50V
C168	1-131-349-00	TANTALUM 2.2 10% 35V
C169	1-131-349-00	TANTALUM 2.2 10% 35V
C173	1-130-471-00	FILM 0.001 5% 50V
C177	1-131-353-00	TANTALUM 10 10% 35V
C179	1-130-853-00	FILM 0.0047 5% 100V
C192	1-130-477-00	FILM 0.0033 5% 50V
C203	1-109-545-00	DIPPED MICA 270PF 5% 100V
C212	1-131-373-00	TANTALUM 22 10% 16V
C221	1-107-204-00	MICA 12PF 5% 500V
C224	1-131-353-00	TANTALUM 10 10% 35V
C225	1-131-345-00	TANTALUM 0.47 10% 35V
C234	1-107-157-00	MICA 27PF 5% 500V
C251	1-131-347-00	TANTALUM 1.0 10% 35V
C252	1-131-347-00	TANTALUM 1.0 10% 35V
C258	1-130-491-00	FILM 0.047 5% 50V
C277	1-109-539-00	DIPPED MICA 150PF 5% 100V
C279	1-109-539-00	DIPPED MICA 150PF 5% 100V
C286	1-109-561-00	DIPPED MICA 0.001 5% 100V
C298	1-131-349-00	TANTALUM 2.2 10% 35V
C299	1-131-353-00	TANTALUM 10 10% 35V
C301	1-109-553-00	DIPPED MICA 470PF 5% 100V
C304	1-130-483-00	FILM 0.01 5% 50V
C525	1-130-483-00	FILM 0.01 5% 50V
D1	8-719-901-33	1SS133
D2	8-719-901-33	1SS133
D3	8-719-901-33	1SS133
D4	8-719-901-33	1SS133
D5	8-719-901-33	1SS133
D7	8-719-901-33	1SS133
D8	8-719-901-33	1SS133
D9	8-719-901-33	1SS133
D10	8-719-901-33	1SS133
D11	8-719-901-33	1SS133
D12	8-719-901-33	1SS133
D13	8-719-901-33	1SS133
D14	8-719-901-33	1SS133
D15	8-719-901-33	1SS133
D16	8-719-901-33	1SS133
D17	8-719-901-33	1SS133
D19	8-719-901-33	1SS133
D20	8-719-901-33	1SS133
D21	8-719-901-33	1SS133
D22	8-719-901-33	1SS133
D23	8-719-101-97	1SS97
D24	8-719-815-80	1S1587
D25	8-719-901-33	1SS133
D26	8-719-901-33	1SS133
D27	8-719-901-33	1SS133

NOTES:

1. **The shaded and ⚠-marked components are critical to safety.**
   Replace only with same components as specified.

2. Parts printed in **Bold-Face type** are normally stocked for replacement purposes. The remaining parts shown in this manual are not normally required for routine service work. Orders for parts not shown in Bold-Face type will be processed, but allow for additional delivery time.

Ref.No.	Parts No.	Description
D28	8-719-162-07	RD6.2E-B
D29	8-719-901-33	1SS133
D30	8-719-162-07	RD6.2E-B
D33	8-719-901-33	1SS133
D50	8-719-815-80	1S1587
IC1	8-759-900-74	SN74LS74AN(TI)
IC1B	8-759-902-74	SN74LS423N(TI)
IC1C	8-759-900-74	SN74LS74AN(TI)
IC1D	8-759-900-00	SN74LS00N(TI)
IC1E	8-759-900-11	SN74LS11N(TI)
IC1F	8-759-900-58	HA1-4905-5(HARRIS)
IC1GA	8-759-906-01	TL601CP(TI)
IC1GB	8-759-906-01	TL601CP(TI)
IC1HA	8-759-906-01	TL601CP(TI)
IC1HB	8-759-906-01	TL601CP(TI)
IC1I	8-759-901-23	SN74LS123N(TI)
IC1J	8-759-974-06	SN7406N(TI)
IC1K	8-759-103-19	uPC319C(NEC)
IC1L	8-759-900-74	SN74LS74AN(TI)
IC1M	8-759-900-00	SN74LS00N(TI)
IC1N	8-759-900-11	SN74LS11N(TI)
IC1P	8-759-900-58	HA1-4905-5(HARRIS)
IC2RA	8-759-906-01	TL601CP(TI)
IC2RB	8-759-906-01	TL601CP(TI)
IC2SA	8-759-906-01	TL601CP(TI)
IC2SB	8-759-906-01	TL601CP(TI)
IC1T	8-757-731-00	CX773A(SONY)
IC1U	8-759-300-25	HD10125(HITACHI)
IC1V	8-759-900-00	SN74LS00N(TI)
IC1X	8-757-903-00	CX7903(SONY)
IC1Y	8-759-103-19	uPC319C(NEC)
IC2A	8-759-301-24	HD10124(HITACHI)
IC2B	8-759-902-21	SN74LS221N(TI)
IC2C	8-759-901-63	SN74LS163AN(TI)
IC2D	8-759-902-21	SN74LS221N(TI)
IC2E	8-759-901-12	SN74LS112AN(TI)
IC2G	8-759-990-82	TL082CP(TI)
IC2H	8-759-990-84	TL084CN(TI)
IC2J	8-759-301-24	HD10124(HITACHI)
IC2K	8-759-902-21	SN74LS221N(TI)
IC2L	8-759-901-63	SN74LS163AN(TI)
IC2M	8-759-902-21	SN74LS221N(TI)
IC2N	8-759-901-12	SN74LS112AN(TI)
IC2R	8-759-990-82	TL082CP(TI)
IC2S	8-759-990-84	TL084CN(TI)

Ref.No.	Parts No.	Description
IC2T	8-759-943-65	SN74365AN(TI)
IC2U	8-759-974-04	SN7404N(TI)
IC2V	8-759-952-07	SN75207BN(TI)
IC2W	8-759-974-06	SN7406N(TI)
IC3A	8-759-001-98	MC10198L(MOTOROLA)
IC3B	8-759-901-63	SN74LS163AN(TI)
IC3C	7-759-914-00	SN7400N(TI)
IC3D	8-759-901-64	SN74LS164N(TI)
IC3E	8-759-900-08	SN74LS08N(TI)
IC3F	8-759-900-59	HI1-201-5(HARRIS)
IC3G	8-749-938-10	BX381(SONY)
IC3H	8-759-900-59	HI1-201-5(HARRIS)
IC3J	8-759-001-98	MC10198L(MOTOROLA)
IC3K	8-759-901-63	SN74LS163AN(TI)
IC3L	8-759-914-00	SN7400N(TI)
IC3M	8-759-901-64	SN74LS164N(TI)
IC3N	8-759-900-08	SN74LS08N(TI)
IC3P	8-759-900-59	HI1-201-5(HARRIS)
IC3R	8-749-938-10	BX381(SONY)
IC3S	8-759-900-59	HI1-201-5(HARRIS)
IC3T	8-759-901-64	SN74LS164N(TI)
IC3U	8-759-901-64	SN74LS164N(TI)
IC3V	8-759-902-21	SN74LS221N(TI)
IC3W	8-759-942-65	SN74265N(TI)
IC3X	8-749-938-10	BX381(SONY)
IC4A	8-759-001-98	MC10198L(MOTOROLA)
IC4B	8-759-911-63	SN74S163N(TI)
IC4C	8-759-900-74	SN74LS74AN(TI)
IC4D	8-759-901-23	SN74LS123N(TI)
IC4E	8-759-900-04	SN74LS04N(TI)
IC4F	8-759-145-57	uPC4557C(NEC)
IC4G	8-759-745-60	NJM4560D(JRC)
IC4H	8-759-952-07	SN75207BN(TI)
IC4J	8-759-001-98	MC10198L(MOTOROLA)
IC4K	8-759-911-63	SN74S163N(TI)
IC4L	8-759-900-74	SN74LS74AN(TI)
IC4M	8-759-901-23	SN74LS123N(TI)
IC4N	8-759-900-04	SN74LS04N(TI)
IC4P	8-759-145-57	uPC4557C(NEC)
IC4R	8-759-745-60	NJM4560D(JRC)
IC4S	8-759-952-07	SN75207BN(TI)
IC4T	8-759-901-64	SN74LS164N(TI)
IC4U	8-759-900-00	SN74LS00N(TI)
IC4V	8-759-974-04	SN7404N(TI)
IC4W	8-759-901-63	SN74LS163AN(TI)

NOTES:

1. **The shaded and ⚠-marked components are critical to safety. Replace only with same components as specified.**
2. Parts printed in **Bold-Face type** are normally stocked for replacement purposes. The remaining parts shown in this manual are not normally required for routine service work. Orders for parts not shown in Bold-Face type will be processed, but allow for additional delivery time.

Ref.No.	Parts No.	Description
IC4Z	8-759-901-64	SN74LS164N(TI)
IC5A	8-759-300-25	HD10125(HITACHI)
IC5B	8-759-941-91	SN74191N(TI)
IC5C	8-759-901-74	SN74LS174N(TI)
IC5D	8-759-910-51	SN74S51N(TI)
IC5E	8-759-902-21	SN74LS221N(TI)
IC5F	8-759-902-21	SN74LS221N(TI)
IC5G	8-759-954-52	SN75452BP(TI)
IC5H	8-759-103-19	uPC319C(NEC)
IC5J	8-759-300-25	HD10125(HITACHI)
IC5K	8-759-941-91	SN74191N(TI)
IC5L	8-759-901-74	SN74LS174N(TI)
IC5M	8-759-910-51	SN74S51N(TI)
IC5N	8-759-902-21	SN74LS221N(TI)
IC5P	8-759-902-21	SN74LS221N(TI)
IC5R	8-759-954-52	SN75452BP(TI)
IC5S	8-759-103-19	uPC319C(NEC)
IC5T	8-759-901-64	SN74LS164N(TI)
IC5U	8-759-910-51	SN74S51N(TI)
IC5V	8-759-902-21	SN74LS221N(TI)
IC5W	8-759-901-63	SN74LS163AN(TI)
IC5X	8-759-911-63	SN74S163N(TI)
IC5Z	8-759-902-21	SN74LS221N(TI)
JP	1-560-733-00	PIN,SHORT
	1-561-832-00	SOCKET,SHORT
L1	1-408-409-00	MICRO 10
L2	1-408-409-00	MICRO 10
L3	1-421-329-00	10
L4	1-421-329-00	10
L5	1-421-329-00	10
L6	1-421-329-00	10
L7	1-408-409-00	MICRO 10
L8	1-408-409-00	MICRO 10
L9	1-408-409-00	MICRO 10
L10	1-408-409-00	MICRO 10
L11	1-408-409-00	MICRO 10
L12	1-408-409-00	MICRO 10
L13	1-421-329-00	10
L14	1-421-329-00	10
L15	1-408-409-00	MICRO 10
L16	1-407-932-00	MICRO 10
L18	1-408-409-00	MICRO 10
L19	1-408-409-00	MICRO 10
L20	1-408-409-00	MICRO 10
L21	1-408-409-00	MICRO 10

Ref.No.	Parts No.	Description
L22	1-408-409-00	MICRO 10
L24	1-407-923-00	MICRO 47
L27	1-421-329-00	10
L28	1-421-329-00	10
L29	1-408-409-00	MICRO 10
Q1	8-729-117-54	2SA1175
Q2	8-729-117-54	2SA1175
Q3	8-769-195-00	2SK43-5
Q4	8-729-117-54	2SA1175
Q5	8-729-672-43	2SC2724
Q6	8-729-117-54	2SA1175
Q7	8-724-375-01	2SC403C
Q8	8-724-375-01	2SC403C
Q9	8-724-375-01	2SC403C
RB1	1-231-521-00	3.3Kx4
RB2	1-231-521-00	3.3Kx4
RV1	1-228-293-00	VAR,5K
RV2	1-228-294-00	VAR,10K
RV3	1-228-292-00	VAR,2K
RV5	1-228-291-00	VAR,1K
RV6	1-228-294-00	VAR,10K
RV7	1-228-293-00	VAR,5K
RV8	1-228-293-00	VAR,5K
RV9	1-228-292-00	VAR,2K
RV12	1-228-294-00	VAR,10K
RV13	1-224-940-00	VAR,10K
RV14	1-228-293-00	VAR,5K
RV20	1-224-940-00	VAR,METAL 10K
VCO1W	1-527-729-00	VCO,14.1875MHz
VCO4X	1-567-088-00	VCO,11.25MHz

CL-7 BOARD

1-608-052-00 PRINTED CIRCUIT BOARD,CL-7

NOTES:

1. **The shaded and ⚠-marked components are critical to safety. Replace only with same components as specified.**
2. Parts printed in **Bold-Face type** are normally stocked for replacement purposes. The remaining parts shown in this manual are not normally required for routine service work. Orders for parts not shown in Bold-Face type will be processed, but allow for additional delivery time.

Ref.No.	Parts No.	Description
CP-52 BOARD		
	A-6728-526-A	MOUNTED CIRCUIT BOARD,CP-52
C5	**1-108-603-00**	**MYLAR 0.1 5% 50V**
Q1	**8-729-663-47**	**2SC1364**
Q2	**8-729-805-13**	**2SC1475**
Q3	**8-729-805-13**	**2SC1475**
R10	**1-207-912-00**	**WIREWOUND 39 3W 10%**
R11	**1-207-912-00**	**WIREWOUND 39 3W 10%**
R12	**1-207-912-00**	**WIREWOUND 39 3W 10%**
R17	**1-244-865-00**	**CARBON 470 1/2W 5%**
R21	**1-244-865-00**	**CARBON 470 1/2W 5%**
T1	**1-427-284-00**	**OUTPUT**
T2	**1-427-284-00**	**OUTPUT**
CP-56 BOARD		
	A-6728-588-A	MOUNTED CIRCUIT BOARD,CP-56
CN301	1-560-210-00	30P
CN302	1-560-190-00	20P
DE-11 BOARD		
	1-608-051-00	PRINTED CIRCUIT BOARD,DE-11
DM1	**8-745-211-00**	**DM211**
DM2	**8-745-211-00**	**DM211**
DE-12 BOARD		
	A-6715-158-A	MOUNTED CIRCUIT BOARD,DE-12
IC1	**8-759-145-58**	**uPC4558C (NEC)**
IC2	**8-759-145-58**	**uPC4558C (NEC)**

Ref.No.	Parts No.	Description
EN-20 BOARD		
	A-6711-412-B	MOUNTED CIRCUIT BOARD,EN-20 WITH DU-33,DU-45,DU-48 BOARD
	DU-33 BOARD	
	1-609-652-00	PRINTED CIRCUIT BOARD,DU-33
CN601	1-560-035-00	5P
D603	**8-719-815-55**	**1S1555**
Q609	**8-724-375-01**	**2SC403C**
Q610	**8-724-375-01**	**2SC403C**
	DU-45 BOARD	
	A-6710-452-A	MOUNTED CIRCUIT BOARD,DU-45
C1	**1-127-447-00**	**ELECT 0.1 10% 25V**
C2	**1-127-447-00**	**ELECT 0.1 10% 25V**
C5	**1-107-208-00**	**MICA 18PF 5% 500V**
CN1	1-560-469-00	6P
CN2	1-560-469-00	6P
IC1	**8-759-902-21**	**SN74LS221N(TI)**
IC2	**8-759-902-21**	**SN74LS221N(TI)**
IC3	**8-759-900-74**	**SN74LS74AN(TI)**
IC4	**8-759-900-02**	**SN74LS02N(TI)**
IC5	**8-759-907-60**	**uA760HC(FSC)**
IC6	**8-759-103-19**	**uPC319C(NEC)**
IC7	**8-759-900-74**	**SN74LS74AN(TI)**
RV1	**1-228-473-00**	**VAR,5K**
RV2	**1-228-473-00**	**VAR,5K**
RV4	**1-228-473-00**	**VAR,5K**
	DU-48 BOARD	
	1-610-460-00	PRINTED CIRCUIT BOARD,DU-48
IC1	**8-759-902-21**	**SN74LS221N(TI)**
RV1	**1-228-459-00**	**VAR,10K**

NOTES:

1. **The shaded and ⚠-marked components are critical to safety. Replace only with same components as specified.**
2. Parts printed in **Bold-Face type** are normally stocked for replacement purposes. The remaining parts shown in this manual are not normally required for routine service work. Orders for parts not shown in Bold-Face type will be processed, but allow for additional delivery time.

Ref.No.	Parts No.	Description
	EN-20 BOARD	
C210	1-107-159-00	MICA 33PF 5% 500V
C214	1-107-209-00	MICA 20PF 5% 500V
C224	1-107-203-00	MICA 11PF 5% 500V
C239	1-107-159-00	MICA 33PF 5% 500V
C241	1-107-209-00	MICA 20PF 5% 500V
C247	1-108-555-00	MYLAR 0.001 5% 50V
C254	1-108-555-00	MYLAR 0.001 5% 50V
C401	1-107-211-00	MICA 24PF 5% 500V
C414	1-130-491-00	FILM 0.047 5% 50V
C421	1-107-202-00	MICA 10PF 5% 500V
C427	1-107-202-00	MICA 10PF 5% 500V
C432	1-131-341-00	TANTALUM 0.1 10% 35V
C445	1-130-483-00	FILM 0.01 5% 50V
C446	1-130-483-00	FILM 0.01 5% 50V
C447	1-130-483-00	FILM 0.01 5% 50V
C448	1-130-483-00	FILM 0.01 5% 50V
C518	1-107-207-00	MICA 16PF 5% 500V
C524	1-107-209-00	MICA 20PF 5% 500V
C616	1-123-311-00	ELECT 1000 20% 10V
C624	1-107-209-00	MICA 20PF 5% 500V
C635	1-107-157-00	MICA 27PF 5% 500V
C649	1-108-555-00	MYLAR 0.001 5% 50V
C710	1-107-159-00	MICA 33PF 5% 500V
C739	1-107-159-00	MICA 33PF 5% 500V
C747	1-108-555-00	MYLAR 0.001 5% 50V
CV601	1-141-240-00	TRIMMER 20PF
D201	8-719-162-07	RD6.2E-B
D202	8-719-162-07	RD6.2E-B
D401	8-719-162-07	RD6.2E-B
D601	8-719-709-25	1S1925-P
D602	8-719-709-25	1S1925-P
D701	8-719-162-07	RD6.2E-B
D702	8-719-162-07	RD6.2E-B
DL501	1-415-184-00	100nS
DL601	1-415-096-00	0.3uS
FL601	1-231-578-00	LPF

Ref.No.	Parts No.	Description
IC201	8-749-936-51	BX365A(SONY)
IC202	8-759-906-01	TL601CP(TI)
IC203	8-759-145-57	uPC4557C(NEC)
IC204	8-759-930-54	CA3054(RCA)
IC205	8-759-907-93	uA796HC-B(FSC)
IC206	8-749-936-51	BX365A(SONY)
IC207	8-759-906-01	TL601CP(TI)
IC208	8-759-145-57	uPC4557C(NEC)
IC209	8-759-930-54	CA3054(RCA)
IC210	8-759-907-93	uA796HC-B(FSC)
IC211	8-759-902-21	SN74LS221N(TI)
IC212	8-759-951-10	SN75110AN(TI)
IC213	8-759-902-21	SN74LS221N(TI)
IC214	8-759-240-53	TC4053BP(TOSHIBA)
IC215	8-759-145-57	uPC4557C(NEC)
IC401	8-759-907-60	uA760HC(FSC)
IC402	8-759-900-10	SN74LS10N(TI)
IC403	8-749-938-10	BX381(SONY)
IC404	8-759-906-01	TL601CP(TI)
IC405	8-759-974-06	SN7406N(TI)
IC406	8-759-907-60	uA760HC(FSC)
IC407	8-759-901-63	SN74LS163AN(TI)
IC408	8-759-990-82	TL082CP(TI)
IC409	8-759-901-23	SN74LS123N(TI)
IC410	8-759-301-24	MC10124L(MOTOROLA)
IC411	8-759-301-31	HD10131(HITACHI)
IC412	8-759-001-13	MC10113L(MOTOROLA)
IC501	8-749-938-80	BX388(SONY)
IC502	8-749-936-61	BX366A(SONY)
IC503	8-749-936-61	BX366A(SONY)
IC504	8-759-220-04	TC40H004P(TOSHIBA)
IC505	8-759-974-06	SN7406N(TI)
IC506	8-749-936-51	BX365A(SONY)
IC601	8-749-936-61	BX366A(SONY)
IC602	8-749-936-51	BX365A(SONY)
IC603	8-749-936-61	BX366A(SONY)
IC605	8-749-936-61	BX366A(SONY)
IC607	8-749-936-61	BX366A(SONY)
IC608	8-759-906-07	TL607CP(TI)
IC609	8-759-906-07	TL607CP(TI)
IC610	8-759-906-07	TL607CP(TI)
IC611	8-741-109-90	BX1099(SONY)
IC612	8-749-938-80	BX388(SONY)
IC613	8-741-105-60	BX1056(SONY)
IC614	8-749-938-90	BX389(SONY)

NOTES:

1. **The shaded and ⚠ -marked components are critical to safety. Replace only with same components as specified.**

2. Parts printed in **Bold-Face type** are normally stocked for replacement purposes. The remaining parts shown in this manual are not normally required for routine service work. Orders for parts not shown in Bold-Face type will be processed, but allow for additional delivery time.

Ref.No.	Parts No.	Description
IC615	8-759-200-60	TA7060AP(TOSHIBA)
IC616	8-759-278-09	TA78L009AP(TOSHIBA)
IC617	8-759-208-94	CX894(SONY)
IC618	8-759-902-21	SN74LS221N(TI)
IC619	8-759-902-21	SN74LS221N(TI)
IC620	8-749-936-51	BX365A(SONY)
IC701	8-749-936-51	BX365A(SONY)
IC702	8-759-906-01	TL601CP(TI)
IC703	8-759-145-57	uPC4557C(NEC)
IC704	8-759-930-54	CA3054(RCA)
IC706	8-749-936-51	BX365A(SONY)
IC707	8-759-906-01	TL601CP(TI)
IC708	8-759-145-57	uPC4557C(NEC)
IC709	8-759-930-54	CA3054(RCA)
IC711	8-759-902-21	SN74LS221N(TI)
LV501	1-407-574-00	VAR,68
LV601	1-407-573-00	VAR,47
Q201	8-724-375-01	2SC403C
Q202	8-724-375-01	2SC403C
Q203	8-724-375-01	2SC403C
Q204	8-724-375-01	2SC403C
Q205	8-729-602-67	2SA1026-7
Q206	8-724-375-01	2SC403C
Q501	8-724-375-01	2SC403C
Q503	8-729-384-47	2SA844
Q504	8-761-622-00	2SC1636
Q505	8-761-622-00	2SC1636
Q506	8-761-622-00	2SC1636
Q507	8-729-384-47	2SA844
Q508	8-724-375-01	2SC403C
Q601	8-729-612-77	2SA1027R
Q602	8-729-612-77	2SA1027R
Q603	8-724-375-01	2SC403C
Q604	8-724-375-01	2SC403C
Q605	8-724-375-01	2SC403C
Q606	8-724-375-01	2SC403C
Q607	8-724-375-01	2SC403C
Q608	8-724-375-01	2SC403C
Q701	8-724-375-01	2SC403C
Q703	8-724-375-01	2SC403C

Ref.No.	Parts No.	Description
RV201	1-228-294-00	VAR,10K
RV202	1-228-294-00	VAR,10K
RV203	1-228-294-00	VAR,10K
RV204	1-228-290-00	VAR,500
RV205	1-228-294-00	VAR,10K
RV206	1-228-293-00	VAR,5K
RV207	1-228-293-00	VAR,5K
RV208	1-228-292-00	VAR,2K
RV209	1-228-293-00	VAR,5K
RV210	1-228-293-00	VAR,5K
RV401	1-228-291-00	VAR,1K
RV402	1-228-292-00	VAR,2K
RV403	1-228-297-00	VAR,100K
RV501	1-228-291-00	VAR,1K
RV502	1-228-291-00	VAR,1K
RV503	1-228-293-00	VAR,5K
RV504	1-228-291-00	VAR,1K
RV601	1-228-293-00	VAR,5K
RV602	1-228-291-00	VAR,1K
RV603	1-228-291-00	VAR,1K
RV604	1-228-291-00	VAR,1K
RV605	1-228-291-00	VAR,1K
RV606	1-228-290-00	VAR,500
RV607	1-228-289-00	VAR,200
RV608	1-228-293-00	VAR,5K
RV609	1-228-294-00	VAR,10K
RV610	1-228-293-00	VAR,5K
RV611	1-228-458-00	VAR,5K
RV701	1-228-294-00	VAR,10K
RV703	1-228-294-00	VAR,10K
RV706	1-228-293-00	VAR,5K
SW501	1-552-509-00	SLIDE
SW502	1-552-509-00	SLIDE
X401	1-527-585-00	VCO 17.734475MHz
X601	1-527-374-00	5.357422MHz

EX-30 BOARD

	A-6725-308-A	EXTENSION BOARD,EX-30
	1-560-919-21	CONNECTOR,60P

NOTES:

1. **The shaded and ⚠-marked components are critical to safety. Replace only with same components as specified.**
2. Parts printed in **Bold-Face type** are normally stocked for replacement purposes. The remaining parts shown in this manual are not normally required for routine service work. Orders for parts not shown in Bold-Face type will be processed, but allow for additional delivery time.

Ref.No.	Parts No.	Description
EX-31 BOARD		
	A-6725-309-B	**EXTENSION BOARD,EX-31**
	1-560-919-21	CONNECTOR,60P
HE-5 BOARD		
	1-608-056-00	PRINTED CIRCUIT BOARD,HE-5
R2	**1-217-074-00**	**WIREWOUND,47 5W 10%**
HP-7 BOARD		
	1-608-062-00	PRINTED CIRCUIT BOARD,HP-7
J1	**1-507-553-00**	**JACK "HEADPHONES"**
KY-32 BOARD		
	A-6728-530-A	MOUNTED CIRCUIT BOARD,KY-32 WITH DP-30
	DP-30 BOARD	
	1-607-973-00	PRINTED CIRCUIT BOARD,DP-30
D15	**8-719-803-21**	**LED,7-SEG TLR321**
D16	**8-719-803-21**	**LED,7-SEG TLR321**
D17	**8-719-803-21**	**LED,7-SEG TLR321**
D18	**8-719-803-21**	**LED,7-SEG TLR321**
S9	**1-552-539-00**	**KEY "RESET"**
	KY-32 BOARD	
CN1	1-560-902-00	16P
CN3	1-560-538-00	6P

Ref.No.	Parts No.	Description
D1	**8-719-815-55**	**1S1555**
D2	**8-719-815-55**	**1S1555**
D3	**8-719-815-55**	**1S1555**
D4	**8-719-815-55**	**1S1555**
D5	**8-719-815-55**	**1S1555**
D6	**8-719-815-55**	**1S1555**
D7	**8-719-815-55**	**1S1555**
D8	**8-719-815-55**	**1S1555**
D9	**8-719-815-55**	**1S1555**
D10	**8-719-815-55**	**1S1555**
D11	**8-719-815-55**	**1S1555**
D12	**8-719-904-55**	**LED,GL-5HD5**
D13	**8-719-904-55**	**LED,GL-5HD5**
D14	**8-719-904-55**	**LED,GL-5HD5**
D19	**8-719-815-55**	**1S1555**
IC1	**8-759-145-84**	**uPD4584BC(NEC)**
IC2	**8-759-145-84**	**uPD4584BC(NEC)**
IC3	**8-759-145-19**	**uPD4519BC(NEC)**
IC4	**8-759-240-81**	**TC4081BP(TOSHIBA)**
IC5	**8-759-240-13**	**TC4013BP(TOSHIBA)**
IC6	**8-759-900-37**	**SN74LS37N(TI)**
IC7	**8-759-245-16**	**TC4516BP(TOSHIBA)**
IC8	**8-759-240-21**	**TC4021BP(TOSHIBA)**
IC9	**8-759-645-17**	**M54517P(MITSUBISHI)**
IC10	**8-759-940-94**	**MSM4094RS(OKI)**
IC11	**8-759-645-17**	**M54517P(MITSUBISHI)**
IC12	**8-759-940-94**	**MSM4094RS(OKI)**
IC13	**8-759-240-21**	**TC4021BP(TOSHIBA)**
IC14	**8-759-984-70**	**MB84070B(FUJITSU)**
IC15	**8-759-245-43**	**TC4543BP(TOSHIBA)**
IC16	**8-759-245-16**	**TC4516BP(TOSHIBA)**
IC17	**8-759-645-17**	**M54517P(MITSUBISHI)**
IC18	**8-759-200-18**	**TC40H042P(TOSHIBA)**
IC19	**8-759-240-50**	**TC4050BP(TOSHIBA)**
PL1	**1-518-386-00**	**5V,30mA**
PL2	**1-518-386-00**	**5V,30mA**
PL3	**1-518-386-00**	**5V,30mA**
Q1	**8-729-374-02**	**2SB740**
Q2	**8-729-374-02**	**2SB740**
Q3	**8-729-374-02**	**2SB740**
Q4	**8-729-374-02**	**2SB740**
Q5	**8-729-374-02**	**2SB740**

NOTES:

1. **The shaded and ⚠-marked components are critical to safety. Replace only with same components as specified.**

2. Parts printed in **Bold-Face type** are normally stocked for replacement purposes. The remaining parts shown in this manual are not normally required for routine service work. Orders for parts not shown in Bold-Face type will be processed, but allow for additional delivery time.

Ref.No.	Parts No.	Description
Q6	8-729-374-02	2SB740
Q7	8-729-374-02	2SB740
Q8	8-729-374-02	2SB740
RB1	1-231-407-00	2.2Kx8
RB2	1-231-407-00	2.2Kx8
RB3	1-231-410-00	10Kx8
RB4	1-231-410-00	10Kx8
S1	1-553-550-31	KEY,12 SQUARE "EJECT"
	1-518-450-11	PILOT LAMP 5V 60mA
	3-706-480-21	KEY TOP(BLUE)
S2	1-553-550-11	KEY,12 SQUARE "STANDBY"
	1-518-450-11	PILOT LAMP 5V 60mA
	3-706-480-01	KEY TOP(WHITE)
S3	1-553-551-11	KEY,17 SQUARE "REW"
	1-518-450-21	PILOT LAMP 5V 60mA
	3-706-481-01	KEY TOP(WHITE)
S4	1-553-551-11	KEY,17 SQUARE "PLAY"
	1-518-450-21	PILOT LAMP 5V 60mA
	3-706-481-01	KEY TOP(WHITE)
S5	1-553-551-11	KEY,17 SQUARE "F FWD"
	1-518-450-21	PILOT LAMP 5V 60mA
	3-706-481-01	KEY TOP(WHITE)
S6	1-553-551-32	KEY,17 SQUARE "STOP"
	1-518-450-21	PILOT LAMP 5V 60mA
	3-706-481-21	KEY TOP(BLUE)
S7	1-553-550-11	KEY,12 SQUARE "SEARCH"
	1-518-450-11	PILOT LAMP 5V 60mA
	3-706-480-01	KEY TOP(WHITE)
S8	1-516-994-00	SLIDE "COUNTER SELECT"

LA-4 BOARD

	1-608-057-00	PRINTED CIRCUIT BOARD,LA-4
D1	8-719-812-44	LED,TLO124 "AUTO OFF"

LE-19 BOARD

	1-608-053-00	PRINTED CIRCUIT BOARD,LE-19
D1	8-719-103-01	LED,SE301A

Ref.No.	Parts No.	Description

LM-4 BOARD

	1-585-913-00	PRINTED CIRCUIT BOARD,LM-4
L1	1-407-696-00	MICRO,18 10%
L2	1-407-696-00	MICRO,18 10%

MB-41 BOARD

	A-6275-295-A	MOUNTED CIRCUIT BOARD,MB-41
CN1 to CN12	1-560-919-31	60P
CN115	1-555-700-21	FLAT CABLE ASS'Y,34P
CN116	1-560-564-00	6P
	1-561-219-00	SOCKET
	1-561-254-00	CONTACT
CN117	1-560-034-00	6P
	1-561-219-00	SOCKET
	1-561-254-00	CONTACT
CN118	1-560-034-00	6P
	1-561-219-00	SOCKET
	1-561-254-00	CONTACT
CN119	1-556-459-00	FLAT CABLE ASS'Y,50P
CN126	1-560-466-00	3P
CN130	1-560-902-00	HEADER,16P

MB-42 BOARD

	A-6725-296-A	MOUNTED CIRCUIT BOARD,MB-42
CN1 to CN6	1-560-919-31	60P
CN207	1-560-564-00	6P
	1-561-219-00	SOCKET
	1-561-254-00	CONTACT
CN208	1-560-034-00	6P
	1-561-219-00	SOCKET
	1-561-254-00	CONTACT
CN209	1-560-034-00	6P
	1-561-219-00	SOCKET
	1-561-254-00	CONTACT
CN210	1-560-918-00	HEADER,50P

NOTES:

1. **The shaded and ⚠-marked components are critical to safety. Replace only with same components as specified.**
2. Parts printed in **Bold-Face type** are normally stocked for replacement purposes. The remaining parts shown in this manual are not normally required for routine service work. Orders for parts not shown in Bold-Face type will be processed, but allow for additional delivery time.

Ref.No.	Parts No.	Description
MY-17 BOARD		
	A-6711-416-A	MOUNTED CIRCUIT BOARD,MY-17
C5	1-130-474-00	FILM 0.0018 5% 50V
C6	1-130-483-00	FILM 0.01 5% 50V
C27	1-130-471-00	FILM 0.001 5% 50V
C28	1-107-207-00	MICA 16PF 5% 500V
C29	1-107-207-00	MICA 16PF 5% 500V
C36	1-130-474-00	FILM 0.0018 5% 50V
C49	1-130-471-00	FILM 0.001 5% 50V
C50	1-130-471-00	FILM 0.001 5% 50V
IC1A	8-759-901-64	SN74LS164N(TI)
IC1B	8-759-901-64	SN74LS164N(TI)
IC1C	8-759-901-64	SN74LS164N(TI)
IC1D	8-759-901-66	SN74LS166AN(TI)
IC1E	8-759-903-74	SN74LS374N(TI)
IC1F	8-759-901-64	SN74LS164N(TI)
IC1G	8-759-901-66	SN74LS166AN(TI)
IC1H	8-759-901-61	SN74LS161AN(TI)
IC1J	8-759-901-61	SN74LS161AN(TI)
IC1M	8-759-974-08	SN7408N(TI)
IC2A	8-759-903-74	SN74LS374N(TI)
IC2B	8-759-903-74	SN74LS374N(TI)
IC2C	8-759-901-64	SN74LS164N(TI)
IC2D	8-759-901-28	MSM5128-12RS(OKI)
IC2E	8-759-901-64	SN74LS164N(TI)
IC2F	8-759-901-66	SN74LS166AN(TI)
IC2G	8-759-901-28	MSM5128-12RS(OKI)
IC2H	8-759-901-57	SN74LS157N(TI)
IC2J	8-759-901-61	SN74LS161AN(TI)
IC2K	8-759-901-61	SN74LS161AN(TI)
IC2L	8-759-902-21	SN74LS221N(TI)
IC2M	8-759-901-64	SN74LS164N(TI)
IC2N	8-759-901-64	SN74LS164N(TI)
IC3A	8-759-901-66	SN74LS166AN(TI)
IC3B	8-759-901-66	SN74LS166AN(TI)
IC3C	8-759-901-64	SN74LS164N(TI)
IC3E	8-759-901-64	SN74LS164N(TI)
IC3F	8-759-903-74	SN74LS374N(TI)
IC3H	8-759-901-57	SN74LS157N(TI)
IC3J	8-759-901-75	SN74LS175N(TI)
IC3K	8-759-901-75	SN74LS175N(TI)
IC3L	8-759-901-61	SN74LS161AN(TI)
IC3M	8-759-900-74	SN74LS74AN(TI)
IC3N	8-759-900-74	SN74LS74AN(TI)
IC4A	8-759-901-66	SN74LS166AN(TI)
IC4B	8-759-901-66	SN74LS166AN(TI)
IC4C	8-759-903-74	SN74LS374N(TI)
IC4D	8-759-901-28	MSM5128-12RS(OKI)
IC4E	8-759-903-74	SN74LS374N(TI)
IC4F	8-759-901-66	SN74LS166AN(TI)
IC4G	8-759-901-28	MSM5128-12RS(OKI)
IC4H	8-759-901-57	SN74LS157N(TI)
IC4J	8-759-901-75	SN74LS175N(TI)
IC4K	8-759-901-63	SN74LS163AN(TI)
IC4L	8-759-901-51	SN74LS151N(TI)
IC4M	8-759-900-30	SN74LS30N(TI)
IC4N	8-759-900-74	SN74LS74AN(TI)
IC5A	8-759-901-66	SN74LS166AN(TI)
IC5B	8-759-901-66	SN74LS166AN(TI)
IC5C	8-759-903-74	SN74LS374N(TI)
IC5D	8-759-901-28	MSM5128-12RS(OKI)
IC5E	8-759-901-64	SN74LS164N(TI)
IC5F	8-759-903-74	SN74LS374N(TI)
IC5G	8-759-901-28	MSM5128-12RS(OKI)
IC5H	8-759-901-57	SN74LS157N(TI)
IC5J	8-759-901-63	SN74LS163AN(TI)
IC5K	8-759-900-85	SN74LS85N(TI)
IC5L	8-759-903-93	SN74LS393N(TI)
IC5M	8-759-900-04	SN74LS04N(TI)
IC5N	8-759-900-04	SN74LS04N(TI)
IC6A	8-759-901-66	SN74LS166AN(TI)
IC6B	8-759-901-66	SN74LS166AN(TI)
IC6C	8-759-901-64	SN74LS164N(TI)
IC6E	8-759-901-64	SN74LS164N(TI)
IC6F	8-759-901-64	SN74LS164N(TI)
IC6H	8-759-901-61	SN74LS161AN(TI)
IC6J	8-759-901-61	SN74LS161AN(TI)
IC6K	8-759-901-91	SN74LS191N(TI)
IC6L	8-759-900-00	SN74LS00N(TI)
IC6M	8-759-900-74	SN74LS74AN(TI)
IC6P	8-759-900-00	SN74LS00N(TI)
IC7A	8-759-901-66	SN74LS166AN(TI)
IC7B	8-759-901-66	SN74LS166AN(TI)
IC7C	8-759-901-64	SN74LS164N(TI)
IC7D	8-759-901-28	MSM5128-12RS(OKI)
IC7E	8-759-901-66	SN74LS166AN(TI)
IC7F	8-759-901-66	SN74LS166AN(TI)
IC7G	8-759-901-28	MSM5128-12RS(OKI)
IC7H	8-759-901-57	SN74LS157N(TI)
IC7J	8-759-901-57	SN74LS157N(TI)

NOTES:

1. **The shaded and ⚠-marked components are critical to safety.**
   Replace only with same components as specified.

2. Parts printed in **Bold-Face type** are normally stocked for replacement purposes. The remaining parts shown in this manual are not normally required for routine service work. Orders for parts not shown in Bold-Face type will be processed, but allow for additional delivery time.

Ref.No.	Parts No.	Description
IC7K	8-759-901-61	SN74LS161AN(TI)
IC7L	8-759-900-08	SN74LS08N(TI)
IC7M	8-759-902-21	SN74LS221N(TI)
IC7N	8-759-901-23	SN74LS123N(TI)
IC7P	8-759-901-64	SN74LS164N(TI)
IC8A	8-759-901-66	SN74LS166AN(TI)
IC8B	8-759-901-66	SN74LS166AN(TI)
IC8C	8-759-903-74	SN74LS374N(TI)
IC8E	8-759-903-74	SN74LS374N(TI)
IC8F	8-759-901-64	SN74LS164N(TI)
IC8H	8-759-901-57	SN74LS157N(TI)
IC8J	8-759-901-57	SN74LS157N(TI)
IC8K	8-759-901-61	SN74LS161AN(TI)
IC8L	8-759-901-91	SN74LS191N(TI)
IC8M	8-759-900-00	SN74LS00N(TI)
IC8N	8-759-974-04	SN7404N(TI)
IC8P	8-759-974-04	SN7404N(TI)
IC9A	8-759-901-66	SN74LS166AN(TI)
IC9B	8-759-901-66	SN74LS166AN(TI)
IC9C	8-759-901-64	SN74LS164N(TI)
IC9D	8-759-901-28	MSM5128-12RS(OKI)
IC9E	8-759-901-66	SN74LS166AN(TI)
IC9F	8-759-901-64	SN74LS164N(TI)
IC9G	8-759-901-28	MSM5128-12RS(OKI)
IC9H	8-759-901-63	SN74LS163AN(TI)
IC9J	8-759-904-96	MBM2149L-55(FUJITSU)
IC9K	8-759-901-23	SN74LS123N(TI)
IC9L	8-759-901-61	SN74LS161AN(TI)
IC9M	8-759-900-04	SN74LS04N(TI)
IC9N	8-759-901-61	SN74LS161AN(TI)
IC9P	8-759-900-00	SN74LS00N(TI)
IC10A	8-759-901-66	SN74LS166AN(TI)
IC10B	8-759-901-66	SN74LS166AN(TI)
IC10C	8-759-903-74	SN74LS374N(TI)
IC10D	8-759-901-28	MSM5128-12RS(OKI)
IC10E	8-759-901-66	SN74LS166AN(TI)
IC10F	8-759-903-74	SN74LS374N(TI)
IC10G	8-759-901-28	MSM5128-12RS(OKI)
IC10H	8-759-901-63	SN74LS163AN(TI)
IC10J	8-759-904-96	MBM2149L-55(FUJITSU)
IC10L	8-759-900-74	SN74LS74AN(TI)
IC10M	8-759-914-00	SN7400N(TI)
IC10N	8-759-901-61	SN74LS161AN(TI)
IC10P	8-759-901-61	SN74LS161AN(TI)
IC11A	8-759-901-66	SN74LS166AN(TI)

Ref.No.	Parts No.	Description
IC11B	8-759-901-66	SN74LS166AN(TI)
IC11C	8-759-903-74	SN74LS374N(TI)
IC11E	8-759-903-74	SN74LS374N(TI)
IC11F	8-759-903-74	SN74LS374N(TI)
IC11H	8-759-901-63	SN74LS163AN(TI)
IC11J	8-759-903-74	SN74LS374N(TI)
IC11K	8-759-900-02	SN74LS02N(TI)
IC11L	8-759-903-74	SN74LS374N(TI)
IC11M	8-759-903-74	SN74LS374N(TI)
IC11N	8-759-900-04	SN74LS04N(TI)
IC12A	8-759-903-74	SN4LS374N(TI)
IC12B	8-759-903-74	SN4LS374N(TI)
IC12C	8-759-901-64	SN74LS164N(TI)
IC12D	8-759-901-28	MSM5128-12RS(OKI)
IC12E	8-759-942-73	SN74273N(TI)
IC12F	8-759-900-04	SN74LS04N(TI)
IC12G	8-759-901-64	SN74LS164N(TI)
IC12H	8-759-974-04	SN7404N(TI)
IC12J	8-759-900-74	SN74LS74AN(TI)
IC12K	8-759-900-04	SN74LS04N(TI)
IC12N	8-759-900-04	SN74LS04N(TI)
L1	1-421-329-00	5.6
RB1	1-231-450-00	3.3Kx8
RB2	1-231-450-00	3.3Kx8

PB-8 BOARD

Do not replace Mounted Circuit Board,PB-8.
Replace the entire DRUM ASS'Y,UPPER A-6762 -103-A.

PC-9 BOARD

	1-604-351-00	PRINTED CIRCUIT BOARD,PC-9
C1	1-131-379-00	TANTALUM 22 10% 10V
IC1	8-759-133-90	uPC339C (NEC)
IC2	8-719-104-42	PS4005-L (NEC)
IC3	8-719-104-42	PS4005-L (NEC)
IC4	8-719-104-42	PS4005-L (NEC)

NOTES:

1. **The shaded and ⚠-marked components are critical to safety.**
   Replace only with same components as specified.

2. Parts printed in **Bold-Face type** are normally stocked for replacement purposes. The remaining parts shown in this manual are not normally required for routine service work. Orders for parts not shown in Bold-Face type will be processed, but allow for additional delivery time.

Ref.No.	Parts No.	Description
PC-14 BOARD		
	1-604-353-00	PRINTED CIRCUIT BOARD,PC-14
IC1	**8-719-104-42**	**PS4005-L (NEC)**
PC-17 BOARD		
	1-608-070-00	PRINTED CIRCUIT BOARD,PC-17
PH1	**8-719-104-42**	**PS4005-L (NEC)**
PC-18 BOARD		
	1-608-071-00	PRINTED CIRCUIT BOARD,PC-18
PH1	**8-719-104-42**	**PS4005-L (NEC)**
PD-20 BOARD		
	1-608-069-00	PRINTED CIRCUIT BOARD,PD-20
PH-16 BOARD		
	1-608-054-00	PRINTED CIRCUIT BOARD,PH-16
Q1	**8-729-206-01**	**PHOTO, TPS601**

Ref.No.	Parts No.	Description
PR-48 BOARD		
	A-6711-431-A	MOUNTED CIRCUIT BOARD,PR-41
C7	**1-109-530-00**	**DIPPED MICA 62PF 5% 100V**
C10	**1-130-475-00**	**FILM 0.0022 5% 50V**
C11	**1-131-371-00**	**TANTALUM 10 10% 16V**
C12	**1-131-371-00**	**TANTALUM 10 10% 16V**
C13	**1-131-371-00**	**TANTALUM 10 10% 16V**
C14	**1-131-371-00**	**TANTALUM 10 10% 16V**
C21	**1-130-487-00**	**FILM 0.022 5% 50V**
C22	**1-107-206-00**	**MICA 15PF 5% 500V**
C40	**1-107-048-00**	**MICA 6.8PF 500V**
C56	**1-130-483-00**	**FILM 0.01 5% 50V**
C57	**1-130-487-00**	**FILM 0.022 5% 50V**
C58	**1-131-371-00**	**TANTALUM 10 10% 16V**
C59	**1-131-371-00**	**TANTALUM 10 10% 16V**
C62	**1-109-530-00**	**DIPPED MICA 62PF 5% 100V**
C73	**1-130-471-00**	**FILM 0.001 5% 50V**
C74	**1-107-206-00**	**MICA 15PF 5% 500V**
C75	**1-131-374-00**	**TANTALUM 33 10% 16V**
C85	**1-109-535-00**	**DIPPED MICA 100PF 5% 100V**
C94	**1-107-048-00**	**MICA 6.8PF 500V**
C99	**1-131-374-00**	**TANTALUM 33 10% 16V**
C100	**1-109-527-00**	**DIPPED MICA 47PF 5% 100V**
C101	**1-109-542-00**	**DIPPED MICA 220PF 5% 100V**
C106	**1-109-527-00**	**DIPPED MICA 47PF 5% 100V**
C107	**1-109-542-00**	**DIPPED MICA 220PF 5% 100V**
C109	**1-121-651-00**	**ELECT 10 16V**
C111	**1-121-651-00**	**ELECT 10 16V**
C112	**1-130-479-00**	**FILM 0.0047 5% 50V**
C115	**1-109-525-00**	**DIPPED MICA 39PF 5% 100V**
C118	**1-107-159-00**	**MICA 33PF 5% 500V**
C119	**1-109-527-00**	**DIPPED MICA 47PF 5% 100V**
C122	**1-131-345-00**	**TANTALUM 0.47 10% 35V**
C128	**1-109-547-00**	**DIPPED MICA 330PF 5% 100V**
C129	**1-131-345-00**	**TANTALUM 0.47 10% 35V**
C137	**1-130-479-00**	**FILM 0.0047 5% 50V**
C139	**1-131-349-00**	**TANTALUM 2.2 10% 35V**
C140	**1-130-483-00**	**FILM 0.01 5% 50V**
C141	**1-130-483-00**	**FILM 0.01 5% 50V**
C142	**1-109-547-00**	**DIPPED MICA 330PF 5% 100V**
C145	**1-109-547-00**	**DIPPED MICA 330PF 5% 100V**
C147	**1-109-535-00**	**DIPPED MICA 100PF 5% 100V**
C148	**1-109-547-00**	**DIPPED MICA 330PF 5% 100V**
C154	**1-131-349-00**	**TANTALUM 2.2 10% 35V**
C155	**1-130-479-00**	**FILM 0.0047 5% 50V**
C160	**1-109-548-00**	**DIPPED MICA 360PF 5% 100V**
C165	**1-109-537-00**	**DIPPED MICA 120PF 5% 100V**

NOTES:

1. **The shaded and ⚠-marked components are critical to safety.**
   Replace only with same components as specified.

2. Parts printed in **Bold-Face type** are normally stocked for replacement purposes. The remaining parts shown in this manual are not normally required for routine service work. Orders for parts not shown in Bold-Face type will be processed, but allow for additional delivery time.

Ref.No.	Parts No.	Description
C167	1-109-535-00	DIPPED MICA 100PF 5% 100V
C168	1-109-548-00	DIPPED MICA 360PF 5% 100V
C169	1-130-475-00	FILM 0.0022 5% 50V
C170	1-109-533-00	DIPPED MICA 82PF 5% 100V
C174	1-130-479-00	FILM 0.0047 5% 50V
C176	1-109-530-00	DIPPED MICA 62PF 5% 100V
C178	1-107-202-00	MICA 10PF 5% 500V
C181	1-109-530-00	DIPPED MICA 62PF 5% 100V
C186	1-109-530-00	DIPPED MICA 62PF 5% 100V
C203	1-131-349-00	TANTALUM 2.2 10% 35V
C208	1-107-211-00	MICA 24PF 5% 500V
C209	1-107-211-00	MICA 24PF 5% 500V
C210	1-107-211-00	MICA 24PF 5% 500V
C211	1-107-211-00	MICA 24PF 5% 500V
C212	1-107-211-00	MICA 24PF 5% 500V
C213	1-107-211-00	MICA 24PF 5% 500V
C214	1-107-211-00	MICA 24PF 5% 500V
C215	1-107-211-00	MICA 24PF 5% 500V
C217	1-107-211-00	MICA 24PF 5% 500V
C219	1-107-211-00	MICA 24PF 5% 500V
C220	1-107-211-00	MICA 24PF 5% 500V
C221	1-107-211-00	MICA 24PF 5% 500V
C222	1-107-211-00	MICA 24PF 5% 500V
C223	1-107-211-00	MICA 24PF 5% 500V
C224	1-107-211-00	MICA 24PF 5% 500V
C225	1-107-211-00	MICA 24PF 5% 500V
C226	1-107-211-00	MICA 24PF 5% 500V
C231	1-107-211-00	MICA 24PF 5% 500V
C232	1-107-211-00	MICA 24PF 5% 500V
C233	1-107-211-00	MICA 24PF 5% 500V
C234	1-107-211-00	MICA 24PF 5% 500V
C235	1-107-211-00	MICA 24PF 5% 500V
C236	1-107-211-00	MICA 24PF 5% 500V
C237	1-107-211-00	MICA 24PF 5% 500V
C238	1-107-211-00	MICA 24PF 5% 500V
C239	1-107-211-00	MICA 24PF 5% 500V
C246	1-131-349-00	TANTALUM 2.2 10% 35V
C247	1-131-349-00	TANTALUM 2.2 10% 35V
C248	1-107-048-00	MICA 6.8PF 500V
C249	1-107-211-00	MICA 24PF 5% 500V
C250	1-130-475-00	FILM 0.0022 5% 50V
C252	1-107-048-00	MICA 6.8PF 500V
C253	1-130-475-00	FILM 0.0022 5% 50V
C257	1-131-349-00	TANTALUM 2.2 10% 35V
C258	1-131-349-00	TANTALUM 2.2 10% 35V
C275	1-121-651-00	ELECT 10 16V
C501	1-109-555-00	DIPPED MICA 560PF 5% 100V

Ref.No.	Parts No.	Description
D1	8-719-815-55	1S1555
D2, D3, D4, D5	8-719-908-10	QSCH-1754(4PCS)
D6	8-719-815-80	1S1587
D7	8-719-815-80	1S1587
D8	8-719-102-51	1SZ51
D9	8-719-815-55	1S1555
D10, D11, D13, D14	8-719-908-10	QSCH-1754(4PCS)
D15	8-719-815-80	1S1587
D16	8-719-815-80	1S1587
D17	8-719-815-55	1S1555
D18	8-719-815-55	1S1555
D19	8-719-815-55	1S1555
D20	8-719-815-55	1S1555
D21	8-719-815-55	1S1555
D22	8-719-815-55	1S1555
D23	8-719-815-55	1S1555
D24	8-719-815-55	1S1555
D25	8-719-815-55	1S1555
D26	8-719-815-55	1S1555
D27	8-719-100-58	RD10EB3
D28	8-719-815-55	1S1555
DL1	1-415-168-00	200nS
DL2	1-415-173-00	50nS
DL1	1-415-173-00	50nS
FB1	1-535-178-00	
FB2	1-535-178-00	
FB3	1-535-178-00	
FB4	1-535-178-00	
IC1	8-749-936-51	BX365A(SONY)
IC2	8-759-900-59	HI1-201-5(HARRIS)
IC3	8-759-990-82	TL082CP(TI)
IC4	8-752-005-20	CX20052(SONY)
IC5	8-759-301-05	HD10105(HITACHI)
IC7	8-759-300-25	HD10125(HITACHI)
IC8	8-759-300-25	HD10125(HITACHI)
IC9	8-759-145-57	uPC4557C(NEC)
IC10	8-749-936-51	BX365A(SONY)
IC11	8-759-990-82	TL082CP(TI)

NOTES:

1. **The shaded and ⚠-marked components are critical to safety.**
   Replace only with same components as specified.

2. Parts printed in **Bold-Face type** are normally stocked for replacement purposes. The remaining parts shown in this manual are not normally required for routine service work. Orders for parts not shown in Bold-Face type will be processed, but allow for additional delivery time.

Ref.No.	Parts No.	Description
IC12	8-759-900-59	HI1-201-5(HARRIS)
IC13	8-759-990-82	TL082CP(TI)
IC14	8-752-005-20	CX20052(SONY)
IC15	8-759-301-05	HD10105(HITACHI)
IC17	8-759-300-25	HD10125(HITACHI)
IC18	8-759-300-25	HD10125(HITACHI)
IC19	8-749-936-51	BX365A(SONY)
IC20	8-759-103-19	uPC319C(NEC)
IC21	8-749-936-51	BX365A(SONY)
IC22	8-759-103-19	uPC319C(NEC)
IC23	8-759-900-58	HA1-4905-5(HARRIS)
IC24	8-759-990-84	TL084CN(TI)
IC25	8-759-900-59	HI1-201-5(HARRIS)
IC26	8-759-901-23	SN74LS123N(TI)
IC27	8-759-900-59	HI1-201-5(HARRIS)
IC28	8-759-902-21	SN74LS221N(TI)
IC29	8-759-954-54	SN75454BP(TI)
IC30	8-759-900-58	HA1-4905-5(HARRIS)
IC31	8-759-990-84	TL084CN(TI)
IC32	8-759-900-58	HA1-4905-5(HARRIS)
IC33	8-759-900-59	HI1-201-5(HARRIS)
IC34	8-759-900-00	SN74LS00N(TI)
IC35	8-759-902-74	SN74LS74AN(TI)
IC36	8-759-902-21	SN74LS221N(TI)
IC37	8-759-900-20	SN74LS20N(TI)
IC38	8-759-245-28	TC4528BP(TOSHIBA)
IC39	8-759-902-21	SN74LS221N(TI)
IC40	8-759-240-22	TC4022BP(TOSHIBA)
IC41	8-749-936-51	BX365A(SONY)
IC42	8-749-936-51	BX365A(SONY)
IC43	8-749-936-51	BX365A(SONY)
IC44	8-752-005-11	CX20051(SONY)
IC45	8-752-005-11	CX20051(SONY)
IC46	8-752-005-11	CX20051(SONY)
IC47	8-759-145-57	uPC4557C(NEC)
IC48	8-759-990-82	TL082CP(TI)
IC49	8-759-906-07	TL607CP(TI)
IC50	8-759-906-07	TL607CP(TI)
IC51	8-759-990-82	TL082CP(TI)
IC52	8-759-145-57	uPC4557C(NEC)
IC53	8-759-001-98	MC10198L(MOTOROLA)
IC54	8-759-910-32	SN74S32N(TI)
IC55	8-759-901-63	SN74LS163AN(TI)
IC56	8-759-942-73	SN74273N(TI)
IC57	8-759-904-96	MBM2149L-55(FUJITSU)
IC58	8-759-904-96	MBM2149L-55(FUJITSU)
IC59	8-759-904-96	MBM2149L-55(FUJITSU)
IC60	8-759-904-96	MBM2149L-55(FUJITSU)
IC61	8-759-942-73	SN74273N(TI)
IC62	8-759-900-04	SN74LS04N(TI)
IC63	8-759-900-13	SN74LS113AN(TI)
IC64	8-759-903-74	SN74LS374N(TI)
IC65	8-759-901-63	SN74LS163AN(TI)
IC66	8-759-902-73	SN74LS273N(TI)
IC67	8-759-902-73	SN74LS273N(TI)
IC68	8-759-902-73	SN74LS273N(TI)
IC69	8-759-903-74	SN74LS374N(TI)
IC72	8-759-179-05	uPC7905H(NEC)
L1	1-421-329-00	5.6
L2	1-421-329-00	5.6
L3	1-408-422-00	120 5%
L4	1-408-422-00	120 5%
L5	1-408-424-00	180 5%
L7	1-421-329-00	5.6
L8	1-421-329-00	5.6
L9	1-421-329-00	5.6
LPF1	1-235-177-00	LPF
LPF2	1-235-177-00	LPF
LPF3	1-235-178-00	LPF
LPF4	1-235-179-00	LPF
LPF5	1-235-179-00	LPF
Q1	8-729-672-43	2SC2724
Q2	8-729-368-90	2SC689H
Q3	8-729-672-43	2SC2724
Q4	8-769-193-09	2SK43-3
Q5	8-769-193-09	2SK43-3
Q6	8-729-353-00	2SA530H
Q7	8-729-368-90	2SC689H
Q8	8-729-368-90	2SC689H
Q9	8-729-100-87	2SC1275
Q10	8-729-100-87	2SC1275
Q11	8-729-672-43	2SC2724
Q12	8-729-113-32	2SB733
Q13	8-729-368-90	2SC689H
Q14	8-729-672-43	2SC2724
Q15	8-769-193-09	2SK43-3

NOTES:

1. **The shaded and ⚠-marked components are critical to safety. Replace only with same components as specified.**

2. Parts printed in **Bold-Face type** are normally stocked for replacement purposes. The remaining parts shown in this manual are not normally required for routine service work. Orders for parts not shown in Bold-Face type will be processed, but allow for additional delivery time.

Ref.No.	Parts No.	Description
Q16	8-769-193-09	2SK43-3
Q17	8-729-353-00	2SA530H
Q18	8-729-368-90	2SC689H
Q19	8-729-368-90	2SC689H
Q20	8-729-100-87	2SC1275
Q6	8-729-353-00	2SA530H
Q7	8-729-368-90	2SC689H
Q8	8-729-368-90	2SC689H
Q9	8-729-100-87	2SC1275
Q10	8-729-100-87	2SC1275
Q11	8-729-672-43	2SC2724
Q12	8-729-113-32	2SB733
Q13	8-729-368-90	2SC689H
Q14	8-729-672-43	2SC2724
Q15	8-769-193-09	2SK43-3
Q16	8-769-193-09	2SK43-3
Q17	8-729-353-00	2SA530H
Q18	8-729-368-90	2SC689H
Q19	8-729-368-90	2SC689H
Q20	8-729-100-87	2SC1275
Q21	8-729-100-87	2SC1275
Q22	8-729-672-43	2SC2724
Q23	8-729-672-43	2SC2724
Q24	8-729-612-77	2SA1027R
Q25	8-729-672-43	2SC2724
Q26	8-729-672-43	2SC2724
Q27	8-729-612-77	2SA1027R
Q28	8-729-110-53	2SA1005
Q29	8-729-110-53	2SA1005
Q30	8-729-110-53	2SA1005
Q501	8-724-375-01	2SC403C
R342	1-217-066-00	WIREWOUND 10 5W 10%
R501	1-212-364-00	METAL 2.2 1W 5%
RB1	1-231-502-00	510
RB2	1-231-405-00	1K
RB3	1-231-502-00	510
RB4	1-231-405-00	1K
RB5	1-235-128-00	1.5K
RB6	1-231-450-00	3.3K
RB7	1-235-128-00	1.5K
RB8	1-231-450-00	3.3K
RB9	1-235-128-00	1.5K
RB10	1-231-450-00	3.3Kx8
RB11	1-231-450-00	3.3Kx8
RB12	1-231-450-00	3.3Kx8

Ref.No.	Parts No.	Description
RV1	1-228-291-00	VAR,1K
RV2	1-228-295-00	VAR,20K
RV3	1-228-291-00	VAR,1K
RV4	1-228-291-00	VAR,1K
RV5	1-228-295-00	VAR,20K
RV6	1-228-295-00	VAR,20K
RV7	1-228-295-00	VAR,20K
RV8	1-228-292-00	VAR,2K
RV9	1-228-294-00	VAR,10K
T1	1-446-330-00	PULSE
T2	1-446-330-00	PULSE
PS-16	BOARD	
	A-6723-198-A	MOUNTED CIRCUIT BOARD,PS-16
C11	1-130-471-00	FILM 0.001 5% 50V
C17	1-130-471-00	FILM 0.001 5% 50V
C102	1-130-471-00	FILM 0.001 5% 50V
C105	1-130-477-00	FILM 0.0033 5% 50V
C108	1-131-342-00	TANTALUM 0.15 10% 35V
C110	1-130-477-00	FILM 0.0033 5% 50V
C113	1-131-342-00	TANTALUM 0.15 10% 35V
D1	8-719-100-28	RD4.7E-B3
D2	8-719-100-28	RD4.7E-B3
D3	8-719-100-28	RD4.7E-B3
D4	8-719-815-55	1S1555
D5	8-719-100-28	RD4.7E-B3
D6	8-719-200-02	10E-2
D8	8-719-200-02	10E-2
D101	8-719-815-55	1S1555
D102	8-719-815-55	1S1555
D103	8-719-815-55	1S1555
D104	8-719-815-55	1S1555
IC1	8-759-135-80	uPC358C(NEC)
IC2	8-759-135-80	uPC358C(NEC)
IC101	8-743-430-00	BX343(SONY)
IC102	8-743-420-00	BX342(SONY)
IC103	8-743-420-00	BX342(SONY)

NOTES:

1. **The shaded and ⚠-marked components are critical to safety. Replace only with same components as specified.**
2. Parts printed in **Bold-Face type** are normally stocked for replacement purposes. The remaining parts shown in this manual are not normally required for routine service work. Orders for parts not shown in Bold-Face type will be processed, but allow for additional delivery time.

Ref.No.	Parts No.	Description
IC104	8-759-600-34	M54532P(MITSUBISHI)
IC105	8-759-240-49	TC4049BP(TOSHIBA)
IC106	8-759-240-49	TC4049BP(TOSHIBA)
IC107	8-759-645-23	M54523P(MITSUBISHI)
IC108	8-759-645-23	M54523P(MITSUBISHI)
Q1	8-729-331-53	2SC2315
Q2	8-729-331-53	2SC2315
Q3	8-729-850-73	2SB507HP-E
Q4	8-729-374-02	2SB740
Q5	8-729-313-42	2SD1134
Q6	8-729-177-43	2SD774
Q7	8-729-313-42	2SD1134
Q8	8-729-374-02	2SB740
Q9	8-729-313-42	2SD1134
Q10	8-729-313-42	2SD1134
Q11	8-729-177-43	2SD774
Q12	8-729-313-42	2SD1134
Q13	8-729-374-02	2SB740
Q14	8-729-313-42	2SD1134
Q15	8-729-177-43	2SD774
R26	1-217-059-00	WIREWOUND 2.7 6W 10%
R27	1-207-620-00	WIREWOUND 1.0 3W 10%
R31	1-207-679-00	WIREWOUND 15 6W 10%
R32	1-207-620-00	WIREWOUND 1.0 3W 10%
RV1	1-228-291-00	VAR,1K
RV2	1-228-291-00	VAR,1K
RV3	1-228-293-00	VAR,5K
RV101	1-228-298-00	VAR,200K
RV102	1-228-298-00	VAR,200K

RE-6 BOARD

	1-608-063-00	PRINTED CIRCUIT BOARD,RE-6
CN331	1-560-546-00	34P
CN332	1-561-028-00	RECEPTACLE,36P "REMOTE-2"
CN333	1-561-655-00	RECEPTACLE,9P "REMOTE-1"

Ref.No.	Parts No.	Description

SR-18 BOARD

	1-608-132-00	PRINTED CIRCUIT BOARD,SR-18

SS-8 BOARD

	1-586-946-00	PRINTED CIRCUIT BOARD,SS-8
L1	1-459-051-00	HEAD,SENSING

ST-22 BOARD

	1-608-067-00	PRINTED CIRCUIT BOARD,ST-22
RV1	1-228-770-00	VAR,CARBON 5K "VIDEO"
RV2	1-228-770-00	VAR,CARBON 5K "CHROMA"
RV3	1-228-770-00	VAR,CARBON 5K "SET UP"
RV4	1-228-770-00	VAR,CARBON 5K "Y/C DELAY"
RV6	1-228-770-00	VAR,CARBON 5K "SYSTEM SYNC PHASE"
RV7	1-228-770-00	VAR,CARBON 5K "SYSTEM SC PHASE"
S1	1-516-226-00	SLIDE "VIDEO"
S2	1-516-226-00	SLIDE "CHROMA"
S3	1-516-226-00	SLIDE "SET UP"
S4	1-516-226-00	SLIDE "Y/C DELAY"
S6	1-516-226-00	SLIDE "AUDIO NR"

NOTES:

1. **The shaded and ⚠ -marked components are critical to safety.**
   Replace only with same components as specified.
2. Parts printed in **Bold-Face type** are normally stocked for replacement purposes. The remaining parts shown in this manual are not normally required for routine service work. Orders for parts not shown in Bold-Face type will be processed, but allow for additional delivery time.

Ref.No.	Parts No.	Description
SV-51 BOARD		
	A-6715-182-A	MOUNTED CIRCUIT BOARD,SV-51 WITH DU-44 BOARD
	DU-44 BOARD	
	1-610-458-00	PRINTED CIRCUIT BOARD,DU-44
C1	**1-108-563-00**	**MYLAR 0.0022 5% 50V**
C2	**1-131-347-00**	**TANTALUM 1 10% 35V**
C3	**1-131-369-00**	**TANTALUM 4.7 10% 16V**
C4	**1-108-563-00**	**MYLAR 0.0022 5% 50V**
D1	**8-719-911-19**	**1SS119**
IC1	**8-759-345-38**	**HD14538BP(HITACHI)**
IC2	**8-759-240-11**	**TC4011BP(TOSHIBA)**
Q1	**8-761-622-00**	**2SC1636**
RV1	**1-228-462-00**	**VAR,100K**
	SV-51 BOARD	
C5	**1-108-579-00**	**MYLAR 0.01 5% 50V**
C6	**1-131-341-00**	**TANTALUM 0.1 10% 35V**
C8	**1-131-341-00**	**TANTALUM 0.1 10% 35V**
C13	**1-131-341-00**	**TANTALUM 0.1 10% 35V**
C15	**1-108-599-00**	**MYLAR 0.068 5% 50V**
C17	**1-108-555-00**	**MYLAR 0.001 5% 50V**
C18	**1-108-555-00**	**MYLAR 0.001 5% 50V**
C20	**1-108-599-00**	**MYLAR 0.068 5% 50V**
C22	**1-131-345-00**	**TANTALUM 0.47 10% 35V**
C23	**1-131-345-00**	**TANTALUM 0.47 10% 35V**
C24	**1-131-345-00**	**TANTALUM 0.47 10% 35V**
C25	**1-108-579-00**	**MYLAR 0.01 5% 50V**
C26	**1-108-595-00**	**MYLAR 0.047 5% 50V**
C27	**1-108-595-00**	**MYLAR 0.047 5% 50V**
C28	**1-108-595-00**	**MYLAR 0.047 5% 50V**
C31	**1-131-381-00**	**TANTALUM 47 10% 10V**
C32	**1-131-341-00**	**TANTALUM 0.1 10% 35V**
C33	**1-130-224-00**	**FILM 0.015 5% 50V**
C34	**1-108-599-00**	**MYLAR 0.068 5% 50V**
C35	**1-131-385-00**	**TANTALUM 22 10% 6.3V**
C39	**1-108-573-00**	**MYLAR 0.0056 5% 50V**
C40	**1-108-569-00**	**MYLAR 0.0039 5% 50V**
C41	**1-108-569-00**	**MYLAR 0.0039 5% 50V**
C45	**1-108-609-00**	**MYLAR 0.18 5% 50V**
C52	**1-108-599-00**	**MYLAR 0.068 5% 50V**
C55	**1-131-343-00**	**TANTALUM 0.22 10% 35V**
C56	**1-108-555-00**	**MYLAR 0.001 5% 50V**
C57	**1-108-555-00**	**MYLAR 0.001 5% 50V**
C58	**1-108-555-00**	**MYLAR 0.001 5% 50V**
C59	**1-108-555-00**	**MYLAR 0.001 5% 50V**
C62	**1-131-371-00**	**TANTALUM 10 10% 16V**
C201	**1-131-341-00**	**TANTALUM 0.1 10% 35V**
C202	**1-108-593-00**	**MYLAR 0.039 5% 50V**
C203	**1-108-569-00**	**MYLAR 0.0039 5% 50V**
C204	**1-108-579-00**	**MYLAR 0.01 5% 50V**
C205	**1-108-555-00**	**MYLAR 0.001 5% 50V**
C207	**1-131-369-00**	**TANTALUM 4.7 10% 16V**
C208	**1-108-591-00**	**MYLAR 0.033 5% 50V**
C209	**1-107-163-00**	**MICA 47PF 5% 500V**
C210	**1-108-603-00**	**MYLAR 0.1 5% 50V**
C212	**1-108-571-00**	**MYLAR 0.0047 5% 50V**
C215	**1-131-368-00**	**TANTALUM 3.3 10% 16V**
C216	**1-131-368-00**	**TANTALUM 3.3 10% 16V**
C217	**1-131-347-00**	**TANTALUM 1 10% 35V**
C218	**1-131-355-00**	**TANTALUM 2.2 10% 25V**
C317	**1-108-579-00**	**MYLAR 0.01 5% 50V**
C318	**1-131-498-00**	**TANTALUM 1.0 10% 25V**
C319	**1-108-557-00**	**MYLAR 0.0012 5% 50V**
C320	**1-108-579-00**	**MYLAR 0.01 5% 50V**
C325	**1-108-579-00**	**MYLAR 0.01 5% 50V**
C326	**1-108-555-00**	**MYLAR 0.001 5% 50V**
C327	**1-108-555-00**	**MYLAR 0.001 5% 50V**
C502	**1-131-341-00**	**TANTALUM 0.1 10% 35V**
C503	**1-131-347-00**	**TANTALUM 1.0 10% 35V**
C506	**1-108-579-00**	**MYLAR 0.01 5% 50V**
C507	**1-131-413-00**	**TANTALUM 1.0 20% 20V**
C508	**1-131-345-00**	**TANTALUM 0.47 10% 35V**
C512	**1-108-555-00**	**MYLAR 0.001 5% 50V**
C513	**1-107-210-00**	**MICA 22PF 5% 500V**
C516	**1-108-555-00**	**MYLAR 0.001 5% 50V**
C517	**1-107-210-00**	**MICA 22PF 5% 500V**
C518	**1-108-555-00**	**MYLAR 0.001 5% 50V**
C519	**1-107-210-00**	**MICA 22PF 5% 500V**
C520	**1-108-555-00**	**MYLAR 0.001 5% 50V**
C521	**1-107-210-00**	**MICA 22PF 5% 500V**

NOTES:

1. **The shaded and ⚠-marked components are critical to safety.**
   Replace only with same components as specified.

2. Parts printed in **Bold-Face type** are normally stocked for replacement purposes. The remaining parts shown in this manual are not normally required for routine service work. Orders for parts not shown in Bold-Face type will be processed, but allow for additional delivery time.

Ref.No.	Parts No.	Description
C522	1-107-177-00	MICA 220PF 5% 500V
C523	1-107-177-00	MICA 220PF 5% 500V
C524	1-108-595-00	MYLAR 0.047 5% 50V
C525	1-131-372-00	TANTALUM 15 10% 16V
C526	1-108-555-00	MYLAR 0.001 5% 50V
C527	1-108-555-00	MYLAR 0.001 5% 50V
C528	1-108-555-00	MYLAR 0.001 5% 50V
C529	1-108-555-00	MYLAR 0.001 5% 50V
C541	1-131-408-00	TANTALUM 1.0 20% 35V
C542	1-131-408-00	TANTALUM 1.0 20% 35V
C543	1-108-579-00	MYLAR 0.01 5% 50V
C544	1-108-579-00	MYLAR 0.01 5% 50V
C546	1-131-369-00	TANTALUM 4.7 10% 16V
C547	1-108-579-00	MYLAR 0.01 5% 50V
C548	1-108-579-00	MYLAR 0.01 5% 50V
C549	1-131-369-00	TANTALUM 4.7 10% 16V
C550	1-108-579-00	MYLAR 0.01 5% 50V
C552	1-131-345-00	TANTALUM 0.47 10% 35V
C553	1-131-385-00	TANTALUM 22 10% 6.3V
C554	1-108-579-00	MYLAR 0.01 5% 50V
C555	1-108-579-00	MYLAR 0.01 5% 50V
D1	8-719-911-19	1SS119
D2	8-719-911-19	1SS119
D3	8-719-911-19	1SS119
D4	8-719-911-19	1SS119
D5	8-719-911-19	1SS119
D6	8-719-982-04	ERB81-004
D7	8-719-982-04	ERB81-004
D8	8-719-982-04	ERB81-004
D9	8-719-982-04	ERB81-004
D10	8-719-911-19	1SS119
D11	8-719-911-19	1SS119
D12	8-719-911-19	1SS119
D13	8-719-911-19	1SS119
D14	8-719-911-19	1SS119
D17	8-719-911-19	1SS119
D18	8-719-911-19	1SS119
D19	8-719-911-19	1SS119
D20	8-719-911-19	1SS119
D21	8-719-911-19	1SS119
D22	8-719-911-19	1SS119
D23	8-719-911-19	1SS119
D101	8-719-911-19	1SS119
D201	8-719-911-19	1SS119
D202	8-719-911-19	1SS119
D203	8-719-911-19	1SS119

Ref.No.	Parts No.	Description
D204	8-719-911-19	1SS119
D205	8-719-101-36	RD3.3ELl
D206	8-719-709-25	1S1925-P
D208	8-719-911-19	1SS119
D209	8-719-911-19	1SS119
D210	8-719-911-19	1SS119
D211	8-719-911-19	1SS119
D301	8-719-911-19	1SS119
D302	8-719-911-19	1SS119
D303	8-719-911-19	1SS119
D304	8-719-911-19	1SS119
D305	8-719-911-19	1SS119
D306	8-719-911-19	1SS119
D307	8-719-911-19	1SS119
D308	8-719-911-19	1SS119
D501	8-719-911-19	1SS119
D504	8-719-911-19	1SS119
D505	8-719-911-19	1SS119
D506	8-719-911-19	1SS119
D507	8-719-911-19	1SS119
D508	8-719-911-19	1SS119
D509	8-719-911-19	1SS119
D510	8-719-911-19	1SS119
D511	8-719-911-19	1SS119
D512	8-719-911-19	1SS119
D513	8-719-911-19	1SS119
D514	8-719-911-19	1SS119
D515	8-719-911-19	1SS119
D516	8-719-911-19	1SS119
IC1	8-759-240-81	TC4081BP(TOSHIBA)
IC2	8-759-240-81	TC4081BP(TOSHIBA)
IC3	8-759-345-38	HD14538BP(HITACHI
IC4	8-759-240-30	TC4030BP(TOSHIBA)
IC5	8-759-240-69	TC4069UBP(TOSHIBA
IC6	8-759-240-75	TC4075BP(TOSHIBA)
IC7	8-759-940-94	MSM4094RS(OKI)
IC8	8-759-240-21	TC4021BP(TOSHIBA)
IC9	8-759-240-71	TC4071BP(TOSHIBA)
IC10	8-759-240-30	TC4030BP(TOSHIBA)
IC11	8-759-240-01	TC4001BP(TOSHIBA)
IC12	8-759-240-53	TC4053BP(TOSHIBA)
IC13	8-759-240-73	TC4073BP(TOSHIBA)
IC14	8-759-245-16	TC4516BP(TOSHIBA)
IC15	8-759-240-30	TC4030BP(TOSHIBA)

NOTES:

1. **The shaded and ⚠-marked components are critical to safety.**
   Replace only with same components as specified.

2. *Parts printed in* ***Bold-Face type*** *are normally stocked for replacement purposes. The remaining parts shown in this manual are not normally required for routine service work. Orders for parts not shown in Bold-Face type will be processed, but allow for additional delivery time.*

Ref.No.	Parts No.	Description
IC16	8-759-135-80	uPC358C(NEC)
IC17	8-759-145-58	uPC4558C(NEC)
IC18	8-759-245-32	TC4532BP(TOSHIBA)
IC19	8-759-245-32	TC4532BP(TOSHIBA)
IC20	8-759-240-81	TC4081BP(TOSHIBA)
IC21	8-759-240-73	TC4073BP(TOSHIBA)
IC22	8-759-240-81	TC4081BP(TOSHIBA)
IC23	8-759-345-38	HD14538BP(HITACHI)
IC24	8-759-240-71	TC4071BP(TOSHIBA)
IC25	8-759-940-94	MSM4094RS(OKI)
IC27	8-759-240-49	TC4049BP(TOSHIBA)
IC28	8-759-240-01	TC4001BP(TOSHIBA)
IC29	8-759-240-53	TC4053BP(TOSHIBA)
IC30	8-759-240-49	TC4049BP(TOSHIBA)
IC31	8-759-240-01	TC4001BP(TOSHIBA)
IC32	8-759-245-16	TC4516BP(TOSHIBA)
IC33	8-759-240-81	TC4081BP(TOSHIBA)
IC34	8-759-729-03	NJM2903D(JRC)
IC35	8-759-729-03	NJM2903D(JRC)
IC36	8-759-240-51	TC4051BP(TOSHIBA)
IC37	8-759-240-51	TC4051BP(TOSHIBA)
IC38	8-759-240-53	TC4053BP(TOSHIBA)
IC39	8-759-345-38	HD14538BP(HITACHI)
IC40	8-759-240-30	TC4030BP(TOSHIBA)
IC41	8-759-240-13	TC4013BP(TOSHIBA)
IC42	8-759-345-38	HD14538BP(HITACHI)
IC43	8-759-240-49	TC4049BP(TOSHIBA)
IC44	8-759-345-38	HD14538BP(HITACHI)
IC45	8-759-240-49	TC4049BP(TOSHIBA)
IC46	8-759-345-38	HD14538BP(HITACHI)
IC47	8-759-240-50	TC4050BP(TOSHIBA)
IC48	8-759-729-03	NJM2903D(JRC)
IC49	8-759-240-66	TC4066BP(TOSHIBA)
IC50	8-759-240-49	TC4049BP(TOSHIBA)
IC51	8-749-909-15	BX3915A(SONY)
IC52	8-759-250-67	TC5067BP(TOSHIBA)
IC53	8-759-135-80	uPC358C(NEC)
IC54	8-759-135-80	uPC358C(NEC)
IC55	8-759-133-90	uPC339C(NEC)
IC56	8-759-240-13	TC4013BP(TOSHIBA)
IC57	8-759-145-58	uPC4558C(NEC)
IC58	8-759-145-58	uPC4558C(NEC)
IC59	8-759-745-50	NJM4558D-D(JRC)
IC60	8-751-941-03	CX194B(SONY)
IC61	8-759-700-58	NJM4558D-FA(JRC)
IC62	8-749-911-54	BX1154(SONY)
IC63	8-749-911-55	BX1155(SONY)
IC65	8-759-133-90	uPC339C(NEC)
IC66	8-759-135-80	uPC358C(NEC)
IC67	8-759-132-40	uPC324C(NEC)
IC68	8-759-729-03	NJM2903D(JRC)
IC69	8-759-145-58	uPC4558C(NEC)
IC70	8-759-145-58	uPC4558C(NEC)
IC74	8-759-708-05	NJM78L05A(JRC)
IC75	8-759-145-58	uPC4558C(NEC)
IC76	8-759-345-38	HD14538BP(HITACHI)
IC77	8-759-345-38	HD14538BP(HITACHI)
IC78	8-759-240-53	TC4053BP(TOSHIBA)
IC79	8-759-240-66	TC4066BP(TOSHIBA)
L1	1-459-155-00	45
L2	1-408-298-00	2mH
L3	1-459-155-00	45
L4	1-408-298-00	2mH
Q1	8-729-631-02	2SC1310
Q2	8-729-188-23	2SD882
Q3	8-729-288-02	2SD880
Q4	8-729-631-02	2SC1310
Q6	8-729-631-02	2SC1310
Q8	8-729-631-02	2SC1310
Q9	8-729-384-46	2SA844
Q10	8-729-631-02	2SC1310
Q201	8-761-622-00	2SC1636
Q202	8-729-631-02	2SC1310
Q203	8-729-631-02	2SC1310
Q204	8-761-622-00	2SC1636
Q205	8-769-193-09	2SK43-3
Q206	8-729-631-02	2SC1310
Q207	8-729-631-02	2SC1310
Q209	8-729-631-02	2SC1310
Q301	8-761-622-00	2SC1636
Q502	8-729-606-32	2SC2603
Q503	8-729-606-32	2SC2603
Q505	8-761-622-00	2SC1636
Q506	8-761-622-00	2SC1636
Q507	8-761-622-00	2SC1636
Q508	8-761-622-00	2SC1636
Q509	8-729-606-32	2SC2603
Q510	8-729-606-32	2SC2603

NOTES:

1. **The shaded and ⚠-marked components are critical to safety. Replace only with same components as specified.**

2. Parts printed in **Bold-Face type** are normally stocked for replacement purposes. The remaining parts shown in this manual are not normally required for routine service work. Orders for parts not shown in Bold-Face type will be processed, but allow for additional delivery time.

Ref.No.	Parts No.	Description
R54	1-207-621-00	WIREWOUND 1.5 3W 10%
R55	1-212-360-00	METAL 1 1W 5%
R99	1-207-636-00	WIREWOUND 100 3W 10%
R323	1-210-817-00	CARBON 1.5M 1/4W 5%
R326	1-210-817-00	CARBON 1.5M 1/4W 5%
R327	1-210-817-00	CARBON 1.5M 1/4W 5%
R502	1-212-708-00	METAL 180K 1/2W 1%
R504	1-212-715-00	METAL 360K 1/2W 1%
R505	1-212-715-00	METAL 360K 1/2W 1%
RB101	1-231-411-00	100Kx8
RB102	1-231-411-00	100Kx8
RV1	1-228-297-00	VAR,100K
RV2	1-228-297-00	VAR,100K
RV3	1-228-297-00	VAR,100K
RV4	1-228-296-00	VAR,50K
RV5	1-228-295-00	VAR,20K
RV6	1-228-296-00	VAR,50K
RV7	1-228-298-00	VAR,20K
RV8	1-228-295-00	VAR,20K
RV201	1-228-293-00	VAR,5K
RV202	1-228-293-00	VAR,5K
RV203	1-228-293-00	VAR,5K
RV204	1-228-295-00	VAR,20K
RV205	1-228-293-00	VAR,5K
RV206	1-228-293-00	VAR,5K
RV501	1-228-294-00	VAR,10K
RV502	1-228-294-00	VAR,10K
RV503	1-228-293-00	VAR,5K
RV504	1-228-293-00	VAR,5K
RV505	1-228-294-00	VAR,10K
RV506	1-228-294-00	VAR,10K
RV507	1-228-294-00	VAR,10K
RV508	1-228-294-00	VAR,10K
RV509	1-228-290-00	VAR,500
RV510	1-228-290-00	VAR,500
RV511	1-228-292-00	VAR,2K
RV513	1-228-290-00	VAR,500
RV515	1-228-293-00	VAR,5K
RV516	1-228-293-00	VAR,5K
RV517	1-228-290-00	VAR,500
RV519	1-228-292-00	VAR,2K
RV520	1-228-289-00	VAR,200
X1	1-527-980-00	4.433619MHz

Ref.No.	Parts No.	Description
SW-85 BOARD		
	1-608-050-00	PRINTED CIRCUIT BOARD,SW-85
S1	1-516-963-00	SLIDE "AUDIO MONITOR"
S2	1-516-995-00	SLIDE "REMOTE SELECT"
SW-86 BOARD		
	1-608-064-00	PRINTED CIRCUIT BOARD,SW-86
S1	1-514-448-00	SLIDE "75ohm ON/OFF"
SY-91 BOARD		
	A-6717-281-A	MOUNTED CIRCUIT BOARD,SY-91
C26	1-107-158-00	MICA 30PF 5% 500V
C27	1-107-158-00	MICA 30PF 5% 500V
C63	1-131-345-00	TANTALUM 0.47 10% 35V
C65	1-131-345-00	TANTALUM 0.47 10% 35V
C66	1-108-583-00	MYLAR 0.015 5% 50V
C68	1-131-371-00	TANTALUM 10 10% 16V
C82	1-108-587-00	MYLAR 0.022 5% 50V
C95	1-131-348-00	TANTALUM 1.5 10% 35V
D1	8-719-815-55	1S1555
D2	8-719-815-55	1S1555
D3	8-719-815-55	1S1555
D4	8-719-815-55	1S1555
D5	8-719-815-55	1S1555
IC1	8-759-200-39	TC40H240P(TOSHIBA)
IC2	8-759-200-39	TC40H240P(TOSHIBA)
IC3	8-759-200-43	TC40H244P(TOSHIBA)
IC4	8-759-200-43	TC40H244P(TOSHIBA)
IC5	8-759-200-39	TC40H240P(TOSHIBA)

NOTES:

1. **The shaded and ⚠-marked components are critical to safety.**
   Replace only with same components as specified.

2. Parts printed in **Bold-Face type** are normally stocked for replacement purposes. The remaining parts shown in this manual are not normally required for routine service work. Orders for parts not shown in Bold-Face type will be processed, but allow for additional delivery time.

Ref.No.	Parts No.	Description
IC6	8-759-200-43	TC40H244P(TOSHIBA)
IC7	8-759-200-43	TC40H244P(TOSHIBA)
IC8	8-759-200-43	TC40H244P(TOSHIBA)
IC9	8-759-200-43	TC40H244P(TOSHIBA)
IC10	8-759-200-43	TC40H244P(TOSHIBA)
IC11	8-759-200-22	TC40H138P(TOSHIBA)
IC12	8-759-906-80	LH0080(SHARP)
IC13	8-759-200-44	TC40H245P(TOSHIBA)
IC14	8-759-200-43	TC40H244P(TOSHIBA)
IC15	8-759-200-43	TC40H244P(TOSHIBA)
IC16	8-759-200-22	TC40H138P(TOSHIBA)
IC17	8-759-220-32	TC40H032P(TOSHIBA)
IC18	8-759-220-04	TC40H004P(TOSHIBA)
IC19	8-759-220-32	TC40H032P(TOSHIBA)
IC20	8-759-200-23	TC40H139P(TOSHIBA)
IC21	8-759-223-68	TC40H368P(TOSHIBA)
IC22	8-759-240-20	TC4020BP(TOSHIBA)
IC23	8-759-220-74	TC40H074P(TOSHIBA)
IC24	8-759-223-68	TC40H368P(TOSHIBA)
IC25	8-759-200-46	TC40H273P(TOSHIBA)
IC26	8-759-200-46	TC40H273P(TOSHIBA)
IC27	8-759-200-46	TC40H273P(TOSHIBA)
IC28	8-759-200-46	TC40H273P(TOSHIBA)
IC29	8-759-200-46	TC40H273P(TOSHIBA)
IC30	8-759-200-46	TC40H273P(TOSHIBA)
IC31	8-759-200-46	TC40H273P(TOSHIBA)
IC32	8-759-200-46	TC40H273P(TOSHIBA)
IC33	8-759-200-22	TC40H138P(TOSHIBA)
IC34	8-759-200-43	TC40H244P(TOSHIBA)
IC35	8-759-200-22	TC40H138P(TOSHIBA)
IC36	8-759-921-28	MSM2128-1AS(OKI)
IC39, IC40, IC41	X-3675-838-3	ROM ASS'Y
IC42	8-759-906-84	LH0084(SHARP)
IC43	8-759-916-82	LH0082A(SHARP)
IC44	8-759-916-82	LH0082A(SHARP)
IC45	8-759-200-14	TC40H011P(TOSHIBA)
IC46	8-759-240-50	TC4050BP(TOSHIBA)
IC47	8-759-240-50	TC4050BP(TOSHIBA)
IC48	8-759-645-29	M54529P(MITSUBISHI)
IC49	8-759-900-05	SN74LS05N(TI)
IC50	8-759-240-21	TC4021BP(TOSHIBA)
IC51	8-759-240-21	TC4021BP(TOSHIBA)
IC52	8-759-240-21	TC4021BP(TOSHIBA)

Ref.No.	Parts No.	Description
IC53	8-759-240-21	TC4021BP(TOSHIBA)
IC54	8-759-240-50	TC4050BP(TOSHIBA)
IC55	8-759-926-31	AM26LS31PC(AMD)
IC56	8-759-645-29	M54529P(MITSUBISHI)
IC57	8-759-240-11	TC4011BP(TOSHIBA)
IC58	8-759-240-71	TC4071BP(TOSHIBA)
IC59	8-759-240-81	TC4081BP(TOSHIBA)
IC61	8-759-240-81	TC4081BP(TOSHIBA)
IC62	8-759-240-69	TC4069UBP(TOSHIBA)
IC63	8-759-345-38	HD14538BP(HITACHI)
IC64	8-759-240-93	TC4093BP(TOSHIBA)
IC65	8-759-940-94	MSM4094RS(OKI)
IC66	8-759-940-94	MSM4094RS(OKI)
IC67	8-759-940-94	MSM4094RS(OKI)
IC68	8-759-940-94	MSM4094RS(OKI)
IC69	8-759-145-84	uPD4584BC(NEC)
IC70	8-759-926-32	AM26LS32PC(AMD)
IC71	8-759-240-01	TC4001BP(TOSHIBA)
IC72	8-759-240-81	TC4081BP(TOSHIBA)
IC73	8-759-645-29	M54529P(MITSUBISHI)
IC74	8-759-345-38	HD14538BP(HITACHI)
IC75	8-759-240-81	TC4081BP(TOSHIBA)
IC76	8-759-240-50	TC4050BP(TOSHIBA)
IC77	8-759-223-68	TC40H368P(TOSHIBA)
IC78	8-759-900-37	SN74LS37N(TI)
IC79	8-759-645-29	M54529P(MITSUBISHI)
IC80	8-759-240-24	TC4024BP(TOSHIBA)
L1	1-459-155-00	45
R21	1-244-762-00	CARBON 5.1M 1/4W 5%
RB1	1-231-411-00	100Kx8
RB2	1-231-411-00	100Kx8
RB3	1-231-407-00	2.2Kx8
RB4	1-231-407-00	2.2Kx8
RB5	1-231-407-00	2.2Kx8
RB6	1-231-407-00	2.2Kx8
RB7	1-231-407-00	2.2Kx8
RB8	1-235-005-00	47Kx8
RB9	1-231-407-00	2.2Kx8
RB10	1-231-411-00	100Kx8
RB11	1-231-410-00	10Kx8
RB12	1-231-405-00	1Kx8
RB13	1-231-407-00	2.2Kx8
RB14	1-231-411-00	100Kx8

NOTES:

1. **The shaded and ⚠-marked components are critical to safety.**
   Replace only with same components as specified.

2. Parts printed in **Bold-Face type** are normally stocked for replacement purposes. The remaining parts shown in this manual are not normally required for routine service work. Orders for parts not shown in Bold-Face type will be processed, but allow for additional delivery time.

Ref.No.	Parts No.	Description
RV1	1-226-095-00	VAR,200K
S1	1-552-509-00	DIP
S2	1-552-509-00	DIP
S3	1-552-509-00	DIP
S4	1-516-925-21	DIP
X1	1-527-827-00	4.9152MHz
TC-25 BOARD		
	A-6715-170-A	MOUNTED CIRCUIT BOARD,TC-25
C1	1-131-349-00	TANTALUM 2.2 10% 35V
C2	1-108-555-00	MYLAR 0.001 5% 50V
C3	1-107-207-00	MICA 16PF 5% 500V
C4	1-131-347-00	TANTALUM 1.0 10% 35V
C5	1-131-349-00	TANTALUM 2.2 10% 35V
C107	1-108-569-00	MYLAR 0.0039 5% 50V
C118	1-131-344-00	TANTALUM 0.33 10% 35V
C128	1-131-344-00	TANTALUM 0.33 10% 35V
C129	1-131-344-00	TANTALUM 0.33 10% 35V
C301	1-131-350-00	TANTALUM 3.3 10% 35V
C302	1-131-350-00	TANTALUM 3.3 10% 35V
C303	1-131-350-00	TANTALUM 3.3 10% 35V
C304	1-131-350-00	TANTALUM 3.3 10% 35V
D1	8-719-200-02	10E-2
D100	8-719-815-55	1S1555
D101	8-719-815-55	1S1555
D103	8-719-815-55	1S1555
D104	8-719-815-55	1S1555
D105	8-719-815-55	1S1555
D200	8-719-400-35	LED,LN35BP
D201	8-719-400-35	LED,LN35BP
D202	8-719-400-35	LED,LN35BP
D203	8-719-400-35	LED,LN35BP
D204	8-719-400-25	LED,LN25RP
D205	8-719-400-25	LED,LN25RP
D206	8-719-400-25	LED,LN25RP
D301	8-719-815-55	1S1555
D302	8-719-815-55	1S1555

Ref.No.	Parts No.	Description
D303	8-719-815-55	1S1555
D304	8-719-815-55	1S1555
D305	8-719-200-02	10E-2
D306	8-719-200-02	10E-2
D307	8-719-200-02	10E-2
D308	8-719-200-02	10E-2
D309	8-719-200-02	10E-2
D310	8-719-200-02	10E-2
D311	8-719-200-02	10E-2
D312	8-719-200-02	10E-2
IC1	8-759-979-22	CX7912(SONY)
IC2	8-759-151-11	uPD5101LC-1(NEC)
IC3	8-759-151-11	uPD5101LC-1(NEC)
IC4	8-759-145-19	uPD4519BC(NEC)
IC5	8-759-240-53	TC4053BP(TOSHIBA)
IC6	8-759-240-13	TC4013BP(TOSHIBA)
IC7	8-759-729-03	NJM2903D(JRC)
IC8	8-759-240-30	TC4030BP(TOSHIBA)
IC9	8-759-240-81	TC4081BP(TOSHIBA)
IC10	8-759-240-81	TC4081BP(TOSHIBA)
IC11	8-759-240-11	TC4011BP(TOSHIBA)
IC12	8-759-240-69	TC4069UBP(TOSHIBA)
IC13	8-759-240-69	TC4069UBP(TOSHIBA)
IC100	8-759-705-62	NJM4562D-D(JRC)
IC200	8-759-645-17	M54517P(MITSUBISHI)
IC201	8-759-729-03	NJM2903D(JRC)
IC202	8-759-345-38	HD14538BP(HITACHI)
IC203	8-759-345-38	HD14538BP(HITACHI)
IC204	8-759-729-03	NJM2903D(JRC)
IC205	8-759-240-81	TC4081BP(TOSHIBA)
IC301	8-759-645-23	M54523P(MITSUBISHI)
IC302	8-759-240-71	TC4071BP(TOSHIBA)
IC303	8-759-645-23	M54523P(MITSUBISHI)
IC304	8-759-600-24	M54543L(MITSUBISHI)
IC305	8-759-600-24	M54543L(MITSUBISHI)
Q1	8-729-663-47	2SC1364
Q100	8-729-663-47	2SC1364
Q101	8-729-663-47	2SC1364
Q102	8-729-663-47	2SC1364
Q103	8-729-663-47	2SC1364
Q104	8-729-663-47	2SC1364
Q105	8-729-663-47	2SC1364
Q106	8-729-663-47	2SC1364
Q107	8-729-663-47	2SC1364
Q108	8-729-663-47	2SC1364

NOTES:

1. **The shaded and ⚠-marked components are critical to safety.**
   Replace only with same components as specified.

2. Parts printed in **Bold-Face type** are normally stocked for replacement purposes. The remaining parts shown in this manual are not normally required for routine service work. Orders for parts not shown in Bold-Face type will be processed, but allow for additional delivery time.

Ref.No.	Parts No.	Description
Q109	8-729-663-47	2SC1364
Q110	8-729-663-47	2SC1364
R103	1-212-717-00	METAL 430K 1/2W 1%
RB1	1-231-410-00	10Kx8
RV101	1-228-292-00	VAR,2K
RV102	1-228-294-00	VAR,10K
RV103	1-228-296-00	VAR,50K
RV104	1-228-294-00	VAR,10K
S1	1-552-782-00	DIP
X1	1-527-827-00	4.9152MHz
TE-2 BOARD		
	1-608-060-00	PRINTED CIRCUIT BOARD,TE-2
PH1	8-719-104-42	PS4005-L (NEC)
TR-14 BOARD		
	1-608-055-00	PRINTED CIRCUIT BOARD,TR-14
RM1	8-745-208-00	DM208
VR-8 BOARD		
	1-608-294-00	PRINTED CIRCUIT BOARD,VR-8
RV1	1-228-218-00	VAR,CARBON 500/500 "HEADPHONES"

Ref.No.	Parts No.	Description
YD-15 BOARD		
	A-6711-424-A	MOUNTED CIRCUIT BOARD,YD-15
C1	1-107-208-00	MICA 18PF 5% 500V
C7	1-107-210-00	MICA 22PF 5% 500V
C9	1-107-159-00	MICA 33PF 5% 500V
C11	1-107-208-00	MICA 18PF 5% 500V
C19	1-107-159-00	MICA 33PF 5% 500V
C30	1-107-211-00	MICA 24PF 5% 500V
C31	1-107-202-00	MICA 10PF 5% 500V
C42	1-130-471-00	FILM 0.001 5% 50V
C44	1-130-471-00	FILM 0.001 5% 50V
C60	1-127-460-00	ELECT 1.0 20% 25V
C61	1-127-460-00	ELECT 1.0 20% 25V
C62	1-127-460-00	ELECT 1.0 20% 25V
C63	1-127-460-00	ELECT 1.0 20% 25V
C64	1-127-460-00	ELECT 1.0 20% 25V
C70	1-109-692-00	DIPPED MICA 620PF 1% 500V
C73	1-107-047-00	MICA 5.6PF 500V
C75	1-109-680-00	DIPPED MICA 200PF 1% 500V
C80	1-109-673-00	DIPPED MICA 100PF 1% 500V
C81	1-109-681-00	DIPPED MICA 220PF 1% 500V
C86	1-127-460-00	ELECT 1.0 20% 25V
C104	1-107-157-00	MICA 27PF 5% 500V
C130	1-107-043-00	MICA 2.7PF 5% 500V
C131	1-107-211-00	MICA 24PF 5% 500V
C132	1-107-211-00	MICA 24PF 5% 500V
C142	1-107-047-00	MICA 5.6PF 500V
D1	8-719-151-07	RD5.1E-B
D2	8-719-815-55	1S1555
D3	8-719-162-07	RD6.2E-B
D4	8-719-191-07	RD9.1E-B
D5	8-719-815-55	1S1555
D6	8-719-815-55	1S1555
D7	8-719-815-55	1S1555
DL1	1-415-154-00	1MHz 35nS
DL2	1-415-154-00	1MHz 35nS
FL1	1-235-190-00	LPF

NOTES:

1. **The shaded and ⚠-marked components are critical to safety. Replace only with same components as specified.**
2. Parts printed in **Bold-Face type** are normally stocked for replacement purposes. The remaining parts shown in this manual are not normally required for routine service work. Orders for parts not shown in Bold-Face type will be processed, but allow for additional delivery time.

Ref.No.	Parts No.	Description
IC1	8-751-340-00	CX134A(SONY)
IC2	8-741-114-00	BX1140(SONY)
IC3	8-759-208-94	CX894(SONY)
IC4	8-759-951-07	SN75107AN(TI)
IC5	8-741-110-10	BX1101(SONY)
IC7	8-749-938-90	BX389(SONY)
IC8	8-749-938-90	BX389(SONY)
IC9	8-759-200-60	TA7060AP(TOSHIBA)
IC10	8-759-200-60	TA7060AP(TOSHIBA)
IC11	8-749-936-61	BX366A(SONY)
IC12	8-759-700-14	NJM78M09A(JRC)
LV1	1-407-568-00	VAR,6.8
LV2	1-407-568-00	VAR,6.8
LV11	1-407-568-00	VAR,6.8
LV12	1-407-568-00	VAR,6.8
Q1	8-724-375-01	2SC403C
Q2	8-724-375-01	2SC403C
Q3	8-724-375-01	2SC403C
Q4	8-724-375-01	2SC403C
Q5	8-724-375-01	2SC403C
Q6	8-761-622-00	2SC1636
Q7	8-724-375-01	2SC403C
Q8	8-729-384-48	2SA844
Q10	8-724-375-01	2SC403C
Q11	8-724-375-01	2SC403C
Q12	8-724-375-01	2SC403C
Q13	8-729-663-47	2SC1364
Q14	8-724-375-01	2SC403C
Q15	8-729-374-02	2SB740
Q16	8-724-375-01	2SC403C
Q18	8-729-663-47	2SC1364
Q20	8-724-375-01	2SC403C
Q21	8-724-375-01	2SC403C
Q22	8-724-375-01	2SC403C
Q24	8-761-622-00	2SC1636
Q23	8-724-375-01	2SC403C
Q25	8-729-190-12	2SC2901
Q26	8-724-375-01	2SC403C
RV1	1-228-292-00	VAR,2K
RV2	1-228-292-00	VAR,2K
RV3	1-228-292-00	VAR,2K
RV4	1-228-291-00	VAR,1K
RV5	1-228-295-00	VAR,20K

Ref.No.	Parts No.	Description
RV6	1-228-295-00	VAR,20K
RV11	1-228-292-00	VAR,2K
RV12	1-228-292-00	VAR,2K
RV70	1-228-291-00	VAR,1K
RV71	1-228-290-00	VAR,500
RV72	1-228-291-00	VAR,1K
RV73	1-228-288-00	VAR,100
RV74	1-228-288-00	VAR,100
RV75	1-228-291-00	VAR,1K
RV76	1-228-290-00	VAR,500
RV77	1-228-457-00	VAR,2K

FRAME

⚠	1-413-119-00	SWITCHING REGULATOR,UR-06
⚠	1-413-120-00	SWITCHING REGULATOR,UR-07
	1-556-458-00	FLAT CABLE ASS'Y,16P KY-32 to MB-41
	1-586-633-00	CONDENSATION SENSOR
CN310	1-562-160-00	RECEPTACLE,12P "DUB/COMPONENT OUT"
CN311	1-561-045-00	RECEPTACLE,7P "DUB OUT"
CN312	1-509-095-00	RECEPTACLE,8P "MONITOR"
CN313	1-561-781-21	RECEPTACLE,BNC "VIDEO OUT-1"
CN314	1-561-781-21	RECEPTACLE,BNC "VIDEO OUT-2"
CN315	1-561-781-21	RECEPTACLE,BNC "REF VIDEO IN-1"
CN316	1-561-781-21	RECEPTACLE,BNC "REF VIDEO IN-1"
CN317	1-509-176-00	RECEPTACLE,XLR,MALE "AUDIO OUT MONITOR"
CN318	1-509-176-00	RECEPTACLE,XLR,MALE "AUDIO OUT CH-2"
CN319	1-509-176-00	RECEPTACLE,XLR,MALE "AUDIO OUT CH-1"
CN320	1-561-781-21	RECEPTACLE,BNC "TIME CODE OUT"
⚠ CN901	1-509-546-00	RECEPTACLE "AC IN"

NOTES:

1. **The shaded and ⚠-marked components are critical to safety.**
   Replace only with same components as specified.
2. Parts printed in **Bold-Face type** are normally stocked for replacement purposes. The remaining parts shown in this manual are not normally required for routine service work. Orders for parts not shown in Bold-Face type will be processed, but allow for additional delivery time.

Ref.No.	Parts No.	Description
H901	8-825-554-71	PP244-21 "CTL"
H902	8-825-554-51	PP240-2103 "AUDIO/TIME CODE"
M301	1-541-209-00	DC,FAN
M302	1-541-209-00	DC,FAN
M801	1-541-163-00	DC "CASSETTE UP"
M901	8-838-047-02	DC,BHF-1905B "CAPSTAN"
M902	1-541-163-00	DC "THREADING"
M903	A-6737-113-A	MOTOR ASS'Y "S-REEL"
M904	A-6737-113-A	MOTOR ASS'Y "T-REEL"
ME401	1-520-455-21	"RF"
ME402	1-520-439-00	"AUDIO CH-1"
ME403	1-520-439-00	"AUDIO CH-2"
PL401	1-518-461-00	14V 50mA "RF METER"
PL402	1-518-461-00	14V 50mA "RF METER"
PL403	1-518-461-00	14V 50mA "AUDIO CH-1 METER"
PL404	1-518-461-00	14V 50mA "AUDIO CH-1 METER"
PL405	1-518-461-00	14V 50mA "AUDIO CH-2 METER"
PL406	1-518-461-00	14V 50mA "AUDIO CH-2 METER"
PL801	1-518-508-00	12V 60mA "CASSETTE LAMP"
PL802	1-518-508-00	12V 60mA "CASSETTE LAMP"
PM901	1-454-338-00	"PINCH"
PM902	1-454-336-00	"T-BRAKE"
PM903	1-454-336-00	"S-BRAKE"
PM904	1-454-337-00	"MAIN BRAKE"
RV401	1-224-694-XX	VAR,CARBON 20K "AUDIO LEVEL CH-1"
RV402	1-224-694-XX	VAR,CARBON 20K "AUDIO LEVEL CH-2"
RV403	1-226-616-00	VAR,CARBON 100K "TRACKING"
⚠ S901	1-554-256-00	ROCKER "POWER"
TM901	1-548-100-11	"HOURS METER"

19-4. PACKING MATERIAL AND ACCESSORY (SUPPLIED)

Ref.No.	Parts No.	Description
⚠	1-534-698-XX	CORD,POWER
	3-677-775-00	INDIVIDUAL CARTON
	3-677-776-00	CUSHION,LOWER
	3-677-777-00	CUSHION,UPPER
	3-701-633-00	BAR,POLY(FOR MANUAL)
	3-701-649-00	BAG,POLY(FOR BVW-10P)
	STANDARD PRODUCTS	9PIN REMOTE CONTROL CABLE(RCC-5G)
	1-560-651-00	PLUG,9P,MALE
	1-561-749-00	SHELL

NOTES:

1. **The shaded and ⚠-marked components are critical to safety. Replace only with same components as specified.**
2. Parts printed in **Bold-Face type** are normally stocked for replacement purposes. The remaining parts shown in this manual are not normally required for routine service work. Orders for parts not shown in Bold-Face type will be processed, but allow for additional delivery time.

BVW-10P (AEP)
3-677-772-11

Sony Corporation

Printed in Japan ©
1983. 6 1104-1

SONY®

VIDEOCASSETTE PLAYER

BVW-10P

SUPPLEMENT-2

(For the 1st Edition, 1st Edition Revised-1, 2nd Edition, 2nd Edition Revised-1)

SUBJECT: TABLE OF CONTENTS

MECHANICAL ALIGNMENT

Section 6. REPLACEMENT OF MAJOR PARTS

Section 7. LINK AND DRIVE SYSTEM ALIGNMENT

Section 8. TORQUE AND BACK TENSION ALIGNMENT

Section 9. TAPE RUN ALIGNMENT

Please file this SUPPLEMENT-2 to your own manual, and replace the TABLE OF CONTENTS with attached one.

BETACAM

OPERATION AND MAINTENANCE MANUAL

9-966-726-11

Sony Corporation

Printed in Japan ©
1983. 8 1107.4-1

ご注意

このマニュアルに記載されている事柄の著作権は当社にあり，説明内容は機器購入者の使用を目的としています。
従って，当社の許可なしに無断で複写したり，説明内容(操作，保守等)と異なる目的で本マニュアルを使用することを禁止します。

CONFIDENTIAL

The material contained in this manual consists of information that is the property of Sony Corporation and is intended solely for use by the purchasers of the equipment described in this manual.
Sony Corporation expressly prohibits the duplication of any portion of this manual or the use thereof for any purpose other than the operation or maintenance of the equipment described in this manual without the express written permission of Sony Corporation.

CONFIDENTIEL

Le matériel contenu dans ce manuel consiste en informations qui sont la propriété de Sony Corporation et sont destinées exclusivement à l'usage des acquéreurs de l'équipement décrit dans ce manuel.
Sony Corporation interdit formellement la copie de quelque partie que ce soit de ce manuel ou son emploi pour tout autre but que des opérations ou entretiens de l'équipement à moins d'une permission écrite de Sony Corporation.

VERTRAULICH

Das in dieser Anleitung enthaltene Material besteht aus Informationen, die Eigentum der Sony Corporation sind, und ausschließlich zum Gebrauch durch den Käufer der in dieser Anleitung beschriebenen Ausrüstung bestimmt sind.
Die Sony Corporation untersagt ausdrücklich die Vervielfältigung jeglicher Teile dieser Anleitung oder den Gebrauch derselben für irgendeinen anderen Zweck als die Bedienung oder Wartung der in dieser Anleitung beschriebenen Ausrüstung ohne ausdrückliche schriftliche Erlaubnis der Sony Corporation.

TABLE OF CONTENTS
INHALTSVERZEICHNIS

1. OPERATION

1-1. Features . . . . . 1-1 (E)
1-2. Location and Function of Controls . . . . 1-2 (E)
1-2-1. Control Panel . . . . . 1-2 (E)
1-2-2. Connector Panel . . . . . 1-4 (E)
1-2-3. Sub Control Panel . . . . . 1-6 (E)
1-3. Connections . . . . . 1-8 (E)
1-3-1. Playback . . . . . 1-8 (E)
1-3-2. Editing with Two VTRs . . . . . 1-9 (E)
1-3-3. Editing with a Control Unit . . . . . 1-11(E)
1-4. Cassette Insertion and Removal . . . . . 1-13(E)
1-5. Playback . . . . . 1-14(E)
1-5-1. Preparation . . . . . 1-14(E)
1-5-2. Operation . . . . . 1-14(E)
1-5-3. Adjustments . . . . . 1-15(E)
1-5-4. Tape Protection Devices . . . . . 1-15(E)
1-6. Check Routines . . . . . 1-16(E)
1-7. Head Cleaning . . . . . 1-19(E)
1-8. Specifications . . . . . 1-19(E)
1-9. Repacking for Shipment . . . . . 1-22(E)

1. BETRIEB

1-1. Besondere Merkmale . . . . . 1-1 (G)
1-2. Lage und Funktion der Bedienungselemente 1-2 (G)
1-2-1. Bedienungsfeld . . . . . 1-2 (G)
1-2-2. Anschlußfeld . . . . . 1-4 (G)
1-2-3. Hilfsbedienungsfeld . . . . . 1-6 (G)
1-3. Anschlüsse . . . . . 1-8 (G)
1-3-1. Wiedergabe . . . . . 1-8 (G)
1-3-2. Schneiden mit zwei Videorecordern . . 1-9 (G)
1-3-3. Schneiden mit einer Steuereinheit . . . . 1-11(G)
1-4. Einlegen und Herausnehmen der Cassette . . 1-13(G)
1-5. Wiedergabe . . . . . 1-14(G)
1-5-1. Vorbereitung . . . . . 1-14(G)
1-5-2. Betrieb . . . . . 1-14(G)
1-5-3. Einstellungen . . . . . 1-15(G)
1-5-4. Bandschutzeinrichtungen . . . . . 1-15(G)
1-6. Überprüfungen . . . . . 1-16(G)
1-7. Reinigung der Köpfe . . . . . 1-19(G)
1-8. Technische Daten . . . . . 1-19(G)
1-9. Wiederverpackung zum Transport . . . . . 1-22(G)

2. INSTALLATION

2-1. Operational Environment 2-1
2-2. Installation Space 2-1
2-3. Operating Voltage 2-2
2-4. Connectors for Optional Connection 2-2
2-5. Input/Output Signal of the Connector . . . 2-2
2-6. Select Switch Setting 2-4
2-7. Rack Mounting 2-5
2-8. Supplied Accessory 2-6
2-9. Optional Accessory 2-6

3. TECHNICAL INFORMATION

3-1. Specifications 3-1
3-2. Location of the Printed Circuit Board 3-3
3-3. Location of the Mechanical Main Parts/Components 3-6
3-4. Printed Circuit Boards 3-7

4. PERIODIC CHECK AND MAINTENANCE

4-1. System Control Operation Check 4-1
4-2. Maintenance Time Table 4-3
4-3. Hours Meter 4-4
4-4. Cleaning Procedure 4-4
4-4-1. Video Head 4-4
4-4-2. Stationary Heads 4-4
4-4-3. Tape Movement Areas 4-4
4-5. Maintenance after Repairs 4-4

5. SERVICE INFORMATION

5-1. Removal of Cabinet 5-1
5-2. Removal of Cassette-up Compartment 5-2
5-3. Note for Check and Maintenance of Printed Circuit Board 5-2
5-4. Module Extender 5-2
5-5. Spare Parts 5-2
5-6. To Operate the Machine without Installing Cassette Tape 5-2
5-7. Maintenance of KY or DE Board 5-3
5-8. Cassette Removal Procedure when the Tape is Slacken in the Machine 5-3
5-9. Alignment Fixture 5-4

6. REPLACEMENT OF MAJOR PARTS

6-1 Replacement of Reel Motor 6-1
6-2. Replacement of Reel Table 6-1
6-2-1. Replacement of Supply Reel Table . . 6-1
6-2-2. Replacement of Take-up Reel Table . . 6-2
6-3. Replacement of Upper Drum 6-2
6-4. Replacement of Drum Assembly 6-4
6-5. Replacement of Capstan Motor 6-5
6-6. Replacement of CTL Head 6-6
6-7. Replacement of Audio/Time Code Head . . . 6-7
6-8. Replacement of Tension Regulator 6-8
6-8-1. Replacement of Tension Regulator Block 6-8
6-8-2. Replacement of Tension Regulator Arm 6-8
6-9. Replacement of Tension Regulator Block DME 6-9
6-10. Replacement of Rotation Detector Block 6-10
6-11. Replacement of Threading Motor 6-11
6-12. Replacement of Threading Ring 6-11
6-13. Adjustment Item Table Main Parts Replacement 6-12

7. LINK AND DRIVE SYSTEM ALIGNMENT

Alignment Information 7-1
7-1. Reel Table Adjustment 7-3
7-1-1. Reel Motor Shaft Slantness Adjustment 7-3
7-1-2. Reel Table Height Adjustment 7-4
7-1-3. Reel Table Rotation Detector Block Position Adjustment 7-5
7-2. Brake System Adjustment 7-6
7-2-1. Main Brake Clearance Adjustment . . . 7-6
7-2-2. Supply Soft Brake Adjustment 7-7
7-2-3. Take-up Pause Brake Adjustment 7-8
7-3. Threading Ring System Adjustment 7-9
7-3-1. Threading Ring Rotation Adjustment 7-9
7-3-2. Gear Box Position Adjustment 7-10
7-3-3. Ring Arm Position Adjustment 7-11
7-3-4. TE-2 Block Position Adjustment 7-12
7-3-5. TE-3 Block Position Adjustment 7-13
7-4. Pinch Press Mechanism Block Adjustment 7-14
7-4-1. Pinch Roller Pressure Adjustment . . . 7-14
7-4-2. Pinch Press Mechanism Block Position Adjustment 7-15
7-5. Tension Regulator System Adjustment . . . 7-16
7-5-1. Tension Regulator Arm Slantness Adjustment 7-16
7-5-2. Tension Regulator Hook Arm Release Adjustment 7-17
7-5-3. Hook Adjusting Plate Position Adjustment 7-17
7-5-4. Tension Regulator Arm Position Adjustment 7-18
7-6. Cassette Up Compartment Adjustment . . . 7-20
7-6-1. Lid Opener Lever Position Adjustment 7-20
7-6-2. Lid Opener Lever Block Position Adjustment 7-21
7-6-3. Motor Block Position Adjustment . . . 7-22
7-6-4. Cassette in Switch Position Adjustment 7-23
7-6-5. Cassette Down Switch Position Adjustment 7-24
7-7. End Sensor Position Adjustment 7-25
7-8. Pinch Release Arm Position Adjustment 7-26

8. TORQUE AND BACK TENSION ALIGNMENT

Alignment Information 8-1
8-1. S Soft Brake Torque Adjustment 8-3
8-2. Reel Motor Torque Adjustment 8-4
8-3. Tension Sensor Impressed Voltage Adjustment 8-4
8-4. FWD Back Tension Adjustment 8-5
8-5. REV Tension Adjustment 8-6

9. TAPE RUN ALIGNMENT

Alignment Information 9-1
9-1. Tape Run Adjustment 9-5
9-2. Video Tracking Adjustment 9-6
9-3. Video Head Dihedral Adjustment 9-9
9-4. CTL Polarity Check 9-10
9-5. CTL Head Position Adjustment 9-11
9-6. TC Head Position Adjustment 9-12
9-7. Switching Position Adjustment 9-13
9-8. CTL Head Azimuth/Zenith Adjustment . . 9-14
9-9. CTL Head Height Adjustment 9-15
9-10. AUDIO/TC Head Zenith Adjustment 9-16
9-11. Audio Head Height Adjustment 9-17
9-12. Audio Head Tape-to-Head Contact Adjustment 9-18
9-13. Audio Head Phase Adjustment 9-19
9-14. Pinch Roller Pressure Timing Adjustment 9-20
9-15. Slip-Ring and Brush Position Adjustment 9-20

17. SEMICONDUCTOR ELECTRODES

Semiconductor Electrodes 17-1

18. PRINTED WIRING BOARD AND SCHEMATIC DIAGRAM

VIDEO
PB-8 18-2
YD-15 18-5
CD-25 18-11
CF-12 18-17
CK-14 18-22
MY-17 18-40
PR-48 18-58
EN-20 18-76
AUDIO
AU-37 18-94
SERVO
SV-51 18-101
SYSTEM CONTROL
SY-91 18-128
TIME CODE
TC-25 18-146
POWER SUPPLY/DRIVER
PS-16 18-151
CONTROL/CONNECTOR PANEL
CP-52, SW-85, VR-8, HP-7, LA-4 18-155
CP-56, SW-86 18-159
ST-22 18-163
KY-32, DP-30 18-167
PC-9, PC-14 18-171
RE-6 18-173
FRAME
DE-12, DE-11, SS-8 18-175
HE-5, PH-16, LE-19, SS-8 18-179
CL-7, PC-17, PC-18 18-181
LM-4 18-183
PD-20 18-184
TE-2 18-185
TR-14 18-186
AC-40 18-187
MB-41 18-189
MB-42 18-197
FRAME 18-203

19. SPARE PARTS AND FIXTURE

19-1. Parts Information 19-1
19-2. Exploded View 19-1
Take-up Side Reel Chassis 19-5
Supply Side Reel Chassis 19-7
Head Drum, Stationary Heads and Tape Guides Block 19-9
Threading Ring Block 19-11
Pinch Press Mechanism Block 19-13
Supply Tension Regulator Block 19-14
Gear Box Block 19-16
Level Control Chassis Block 19-17
Function Control Chassis Block 19-19
Connector Panel Block 19-21
TBC Control Block 19-23
Chassis Block (1) 19-24
Switching Regulator, Switching Regulator (UR-06), Switching Regulator (UR-07) 19-26
Cassette-up Compartment 19-29
Ornamental Panel Block (1) 19-31
Ornamental Panel Block (2) 19-33
Printed Circuit Board Block (1) 19-35
Printed Circuit Board Block (2) 19-37
Extension Board Block 19-39
19-3. Electrical Parts List 19-41
19-4. Packing Material and Accessory (Supplied) 19-74

17. SEMICONDUCTOR ELECTRODES

Semiconductor Electrodes 17-1

18. PRINTED WIRING BOARD AND SCHEMATIC DIAGRAM

VIDEO
PB-5 18-2
YD-15 18-5
CD-25 18-11
CP-12 18-17
CK-14 18-22
MY-17 18-40
PR-48 18-58
BN-20 18-76
AUDIO
AU-37 18-94
SERVO
SV-51 18-101
SYSTEM CONTROL
SY-51 18-128
TIME CODE
TC-25 18-146
POWER SUPPLY/DRIVER
PS-16 18-151
CONTROL/CONNECTOR PANEL
CP-52
SW-85
VR-8 18-153
HP-7
LA-4
CP-56
SW-86 18-159
ST-22 18-163
KY-32
DP-30 18-167
PC-9
PC-14 18-171
RB-6 18-173
FRAME
DF-12
DF-11 18-175
SS-4
HE-5
PH-16
LE-19 18-179
SS-8
CL-7
PC-17 18-181
PC-18
LM-4 18-183
PD-20 18-184
TE-2 18-185
TR-14 18-186
AC-40 18-187
MR-41 18-189
MR-42 18-197
FRAME 18-203

19. SPARE PARTS AND FIXTURE

19-1. Parts Information 19-1
19-2. Exploded View 19-1
Take-up Side Reel Chassis 19-5
Supply Side Reel Chassis 19-7
Head Drum, Stationary Heads and Tape Guides Block 19-9
Threading Ring Block 19-11
Pinch Press Mechanism Block 19-13
Supply Tension Regulator Block 19-14
Gear Box Block 19-16
Level Control Chassis Block 19-17
Function Control Chassis Block 19-19
Connector Panel Block 19-21
TBC Control Block 19-23
Chassis Block (1) 19-24
Switching Regulator
Switching Regulator (UR-06)
Switching Regulator (UR-07) 19-26
Cassette-up Compartment 19-29
Ornamental Panel Block (1) 19-31
Ornamental Panel Block (2) 19-33
Printed Circuit Board Block (1) 19-35
Printed Circuit Board Block (2) 19-37
Extension Board Block 19-39
19-3. Electrical Parts List 19-41
19-4. Packing Material and Accessory (Supplied) 19-74

SECTION 6
REPLACEMENT OF MAJOR PARTS

6-1. REPLACEMENT OF REEL MOTOR

Mode: Unthreading end

Tool: Allen wrench (each edge has 1.5mm)

Replacement procedure:

(1) Remove the reel table. (See sec. 6-2)

(2) Disconnect the connector of the reel motor.

(3) Remove the mounting screws of the reel motor on the front of the chassis.

(4) Place the connector of the reel motor in the direction as shown in figure, and install the reel motor.

(5) Insert a poly-slider-washer on the reel shaft.

(6) Perform the adjustment as sec 6-13.

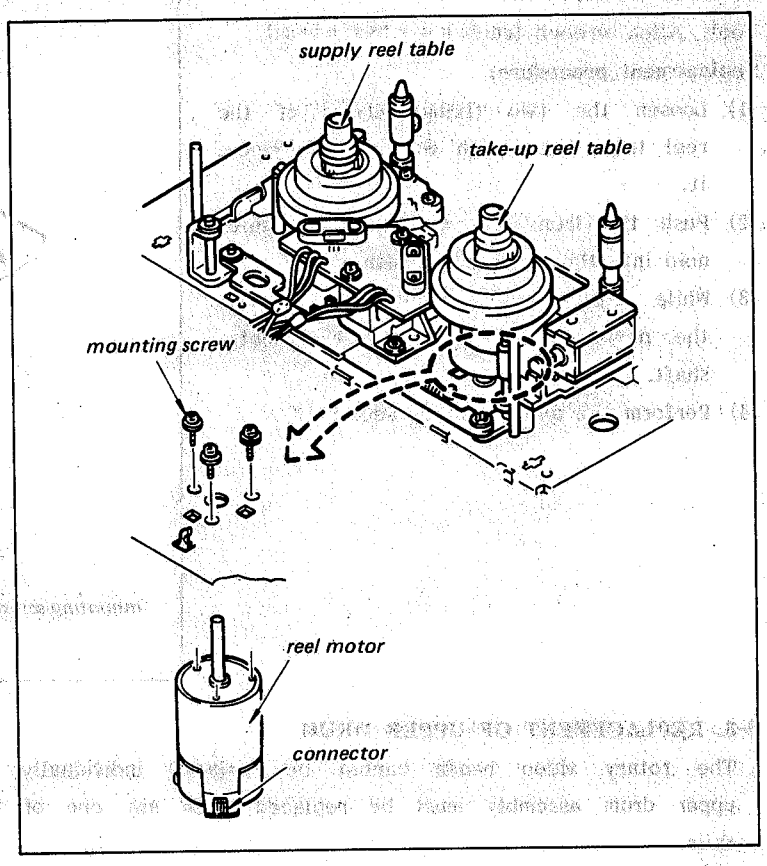

6-2. REPLACEMENT OF REEL TABLE

6-2-1. Replacement of Supply Reel Table

Mode: Unthreading end

Tool: Allen wrench (each edge has 1.5mm)

Replacement procedure:

(1) Loosen the two fixing screws of the reel table with allen wrench and remove it.

(2) Push the iron core of the brake solenoid into the energized position.
Push the iron core of the S brake solenoid into the energized position.

(3) While pushing the iron cores of the two solenoids, install the new reel table to the reel motor shaft.

(4) Perform the adjustment as sec 6-13.

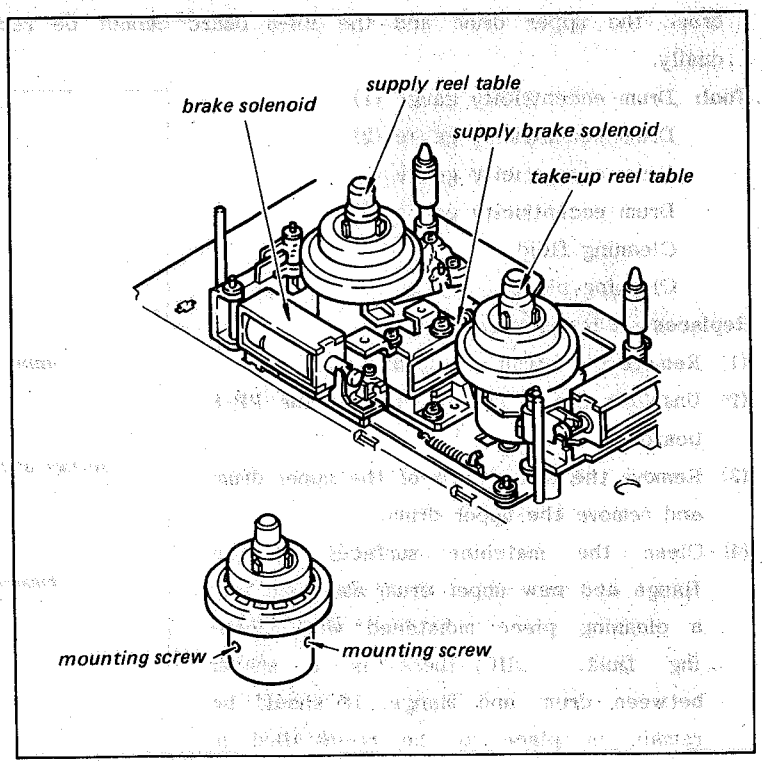

6-2-2. Replacement of Take-up Reel Table

Mode: Unthreading end

Tool: Allen wrench (each edge has 1.5mm)

Replacement procedure:

(1) Loosen the two fixing screws of the reel table with allen wrench and remove it.

(2) Push the iron core of the brake solenoid into the energized position.

(3) While pushing the iron core, install the new reel table to the reel motor shaft.

(4) Perform the adjustment as sec. 6-13.

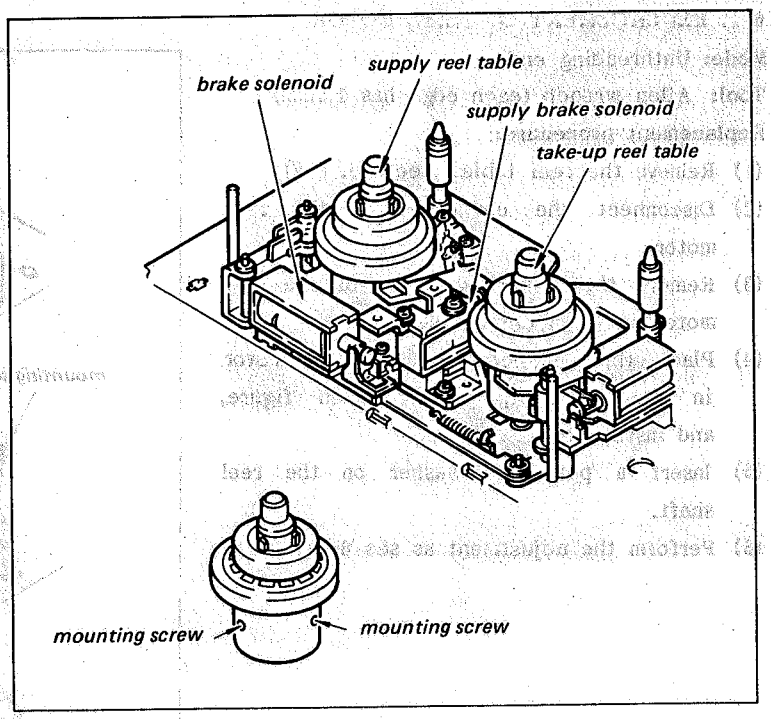

6-3. REPLACEMENT OF UPPER DRUM

. The rotary video heads cannot be replaced individually, the whole upper drum assembly must be replaced when any one of these heads fails.

. Since the PB-8 board is mounted on the repair parts of the upper drum, the upper drum and the PB-8 board cannot be replaced individually.

Tool: Drum eccentricity gauge (1)
Drum eccentricity gauge (2)
Drum eccentricity gauge (3)
Drum eccentricity gauge (5)
Cleaning fluid
Cleaning piece

Replacement procedure:

(1) Remove the brush of the slip ring.

(2) Unsolder the eleven leads from the PB-8 board.

(3) Remove the two screws of the upper drum and remove the upper drum.

(4) Clean the matchine surfaces of the flange and new upper drum assembly with a cleaning piece moistened with cleaning fluid. (If there is a spacer between drum and flange, it should be remain in place, or be re-installed in the same place with the new upper drum

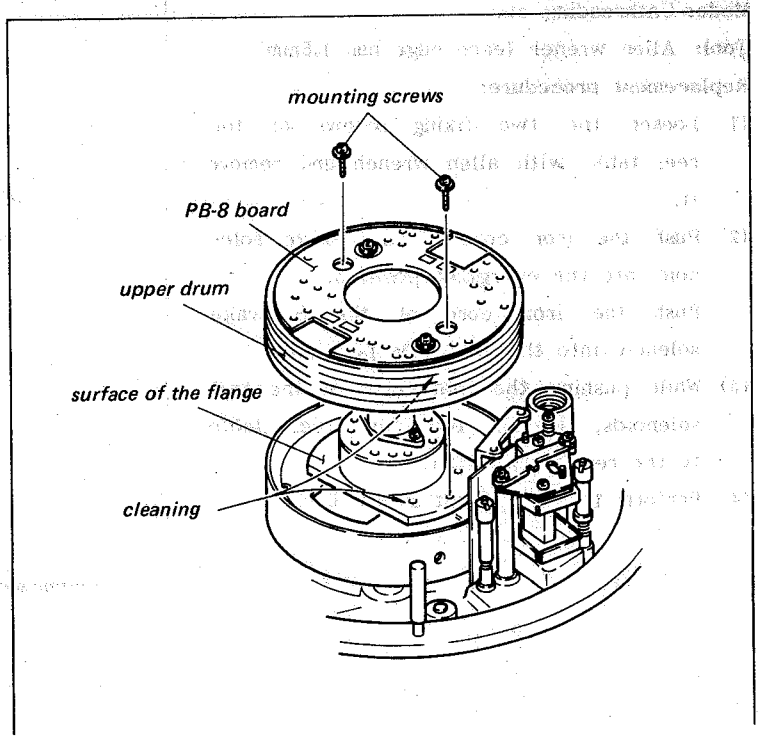

assembly. The spacer is 0.01mm, 0.03mm, 0.05mm or 0.1mm thick.)

(5) Place the upper drum assembly so that the marked A of the PB-8 board is closest to the marked A of the printed circuit board and thread snugly with two screws but do not tighten.

Adjustment procedure:

(1) Remove the pinch release arm.

(2) Assemble the drum eccentricity gauges (1), (2), (3) and (5) as shown in figure. Mount the assembled gauges on the hole as shown in figure so that the tip probe positions at the point about 5mm apart from the top edge of the upper drum.

(3) Turn the upper drum slowly clockwise direction and confirm the pointer deflection of the gauge is within 5 micron during one complete turn of the upper drum. If this specification is satisfied, proceed to step (5). If it is not, perform then continue with remaining steps.

(4) Tap the upper side of the upper drum with a nylon hammer or a screwdriver handle so that the gauge deflection remains within 5 micron.

(5) After the adjustment, tighten the two screws that are securing the upper drum, alternately and gradually using a tightening torque: 8Kg.cm

(6) After the screws are tightened, check again that the eccentricity of the upper drum is within 5 micron.

(7) Solder the eleven leads to the PB-8 board.

(8) Install the brush and the pinch release arm.

(9) Perform the adjustment as sec. 6-13.

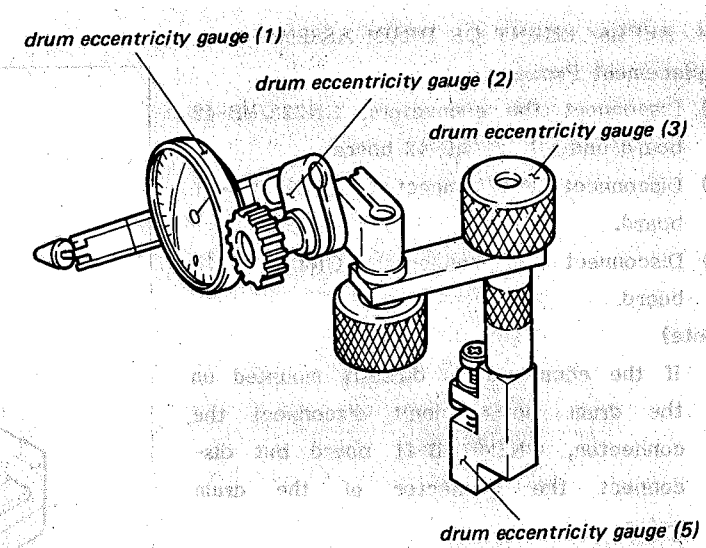

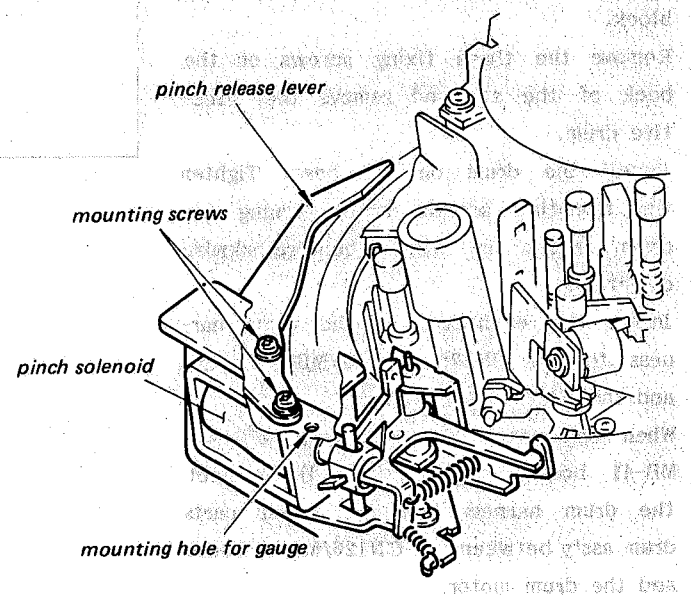

6-4. REPLACEMENT OF DRUM ASSEMBLY

Replacement Procedure:

(1) Disconnect the connectors, CN222/MB-42 board and CN221/MB-42 board.

(2) Disconnect the connector, CN125/MB-41 board.

(3) Disconnect the connector, CN126/MB-41 board.

(Note)

If the connector is directly mounted on the drum motor, don't disconnect the connector, CN126/MB-41 board but disconnect the connector of the drum motor.

(4) Remove the brush of the slip ring block.

(5) Remove the three fixing screws on the back of the set and remove the difective drum.

(6) Install the drum on the base. Tighten the mounting screws while turning the drum ass'y in the counterclockwise direction.

(7) Insert the connector of the drum harness to the CN222, CN221/MB-42 board and the CN125/MB-41 board.

(8) When disconnect the connector, CN126/MB-41 board in the step (3), connect the drum harness into the repair parts drum ass'y between the CN126/MB-41 board and the drum motor.

When disconnect the connector of the drum harness in the step (3), connect this connector to the new drum motor.

(9) After the brush is installed, perform the adjustment as sec. 6-13.

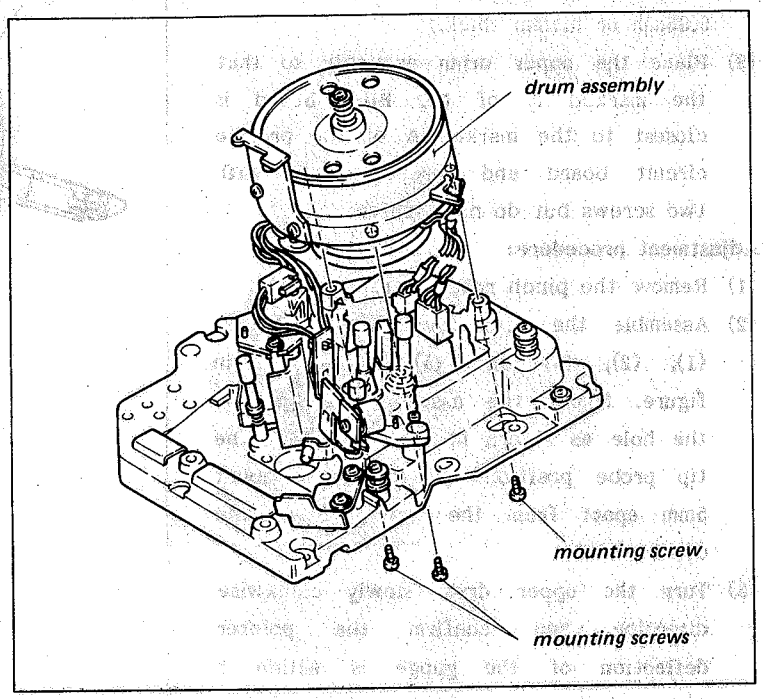

6-5. REPLACEMENT OF CAPSTAN MOTOR

Replacement procedure:

(1) Disconnect the connector of the capstan motor.

(2) Remove the three screws as shown in figure and remove the capstan motor.

(3) Install the capstan motor. Tighten the fixing screws while turning the capstan motor in the clockwise direction viewing from top of the set.

(4) Perform the adjustment as sec. 6-13.

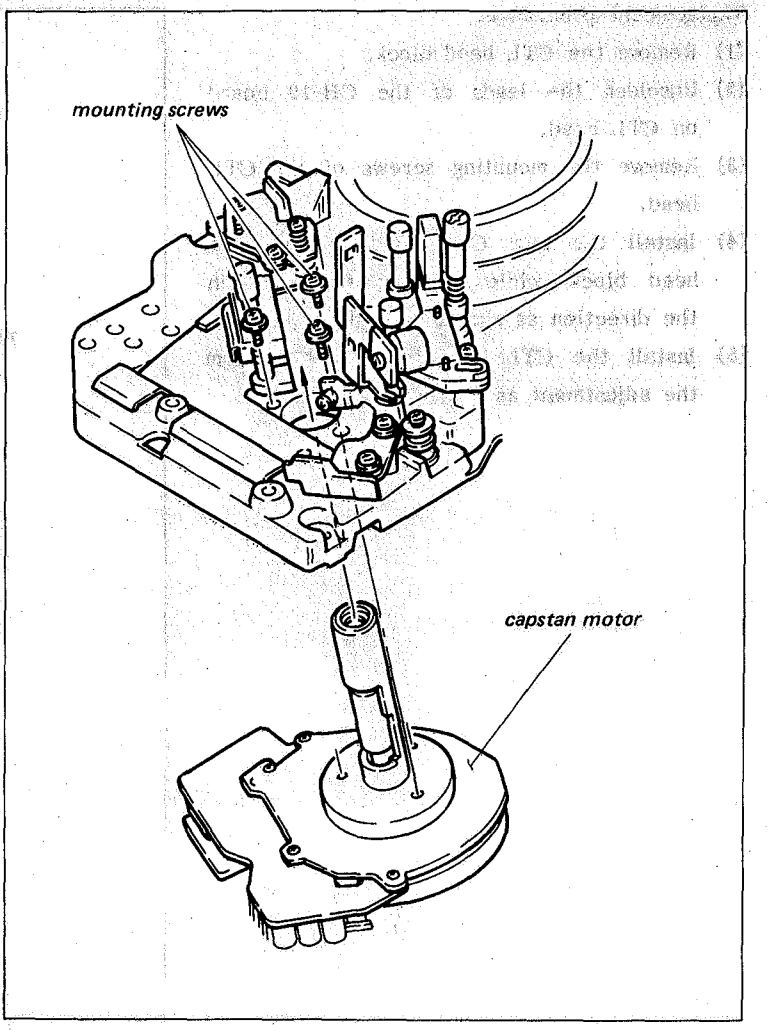

6-6. REPLACEMENT OF CTL HEAD

Replacement procedure:

(1) Remove the CTL head block.

(2) Unsolder the leads of the CH-10 board on CTL head.

(3) Remove the mounting screws of the CTL head.

(4) Install the new CTL head to the CTL head block while pressing the head in the direction as shown in figure.

(5) Install the CTL head block and perform the adjustment as sec. 6-13.

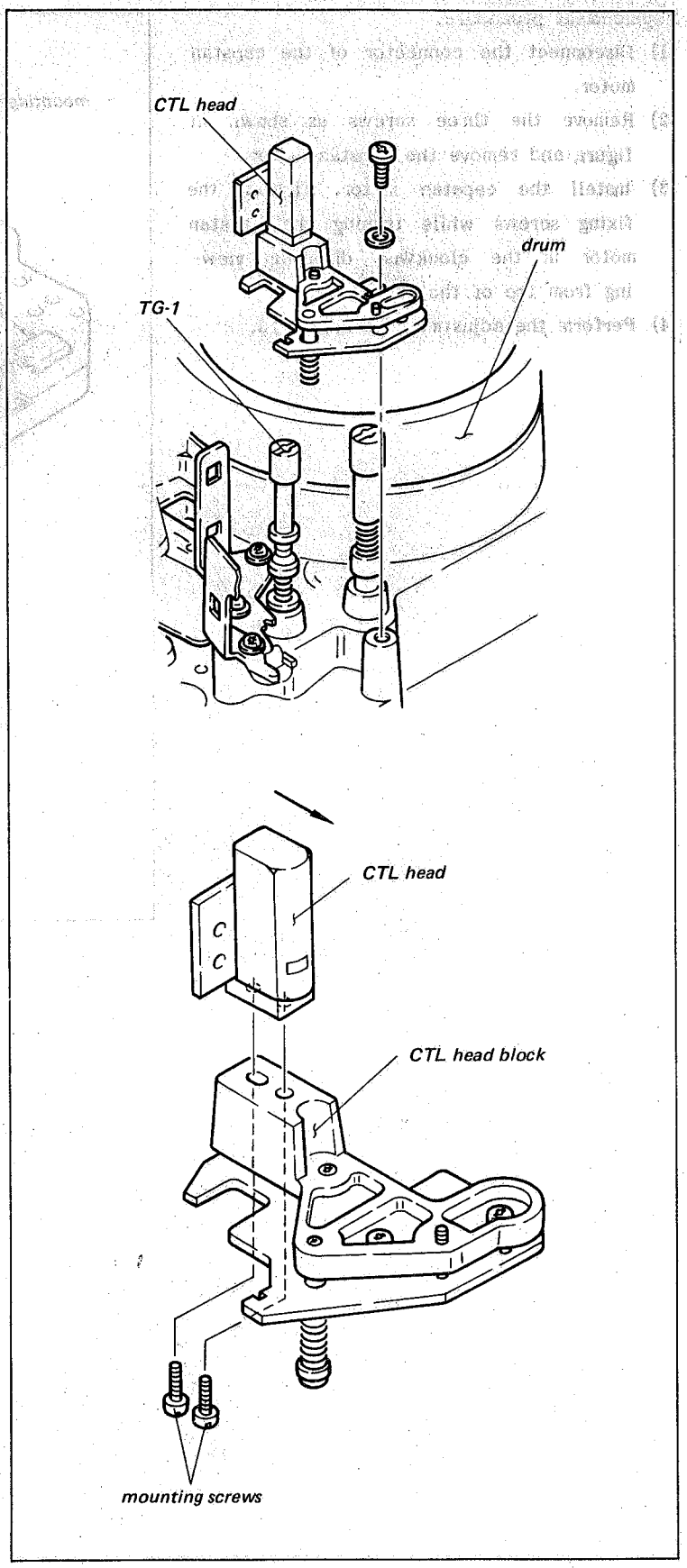

6-7. REPLACEMENT OF AUDIO/TIME CODE HEAD

Replacement procedure:

(1) Remove the audio/time code head block.

(2) Remove the shield case (2).

(3) Unsolder the six leads of AH-9 board.

(4) Replace the audio/time code head to the new one and solder the leads that is unsoldered in step (3).

tube color	lead color	AH-9 board
black	white	TY
	red	TX
blue	white	2Y
	red	2X
red	red	1X
	white	1Y

(5) Install the shield case while pressing in the direction of the arrow.

(6) Perform the adjustment as sec. 6-13.

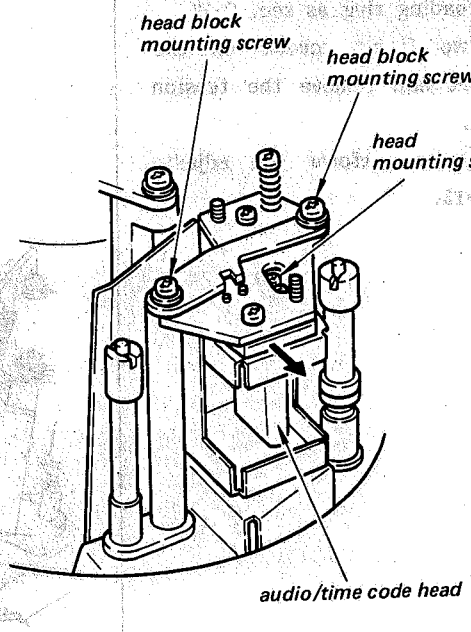

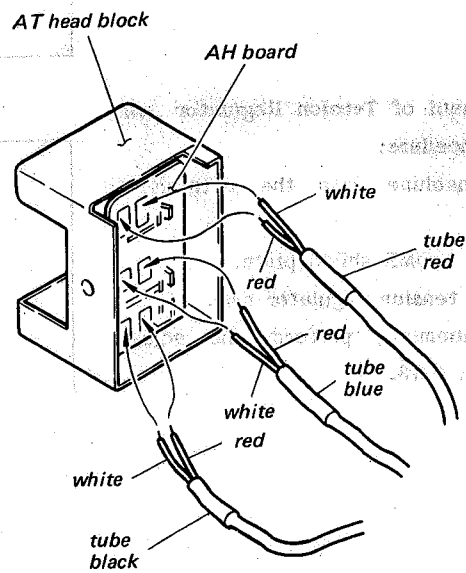

6-8. REPLACEMENT OF TENSION REGULATOR

6-8-1. Replacement of Tension Regulator Block

Replacement procedure:

(1) Remove the threading ring as sec. 6-12.

(2) Remove the two fixing screws on the back of the set and remove the tension regulator block.

(3) After replacement, perform the adjustment as sec. 6-13.

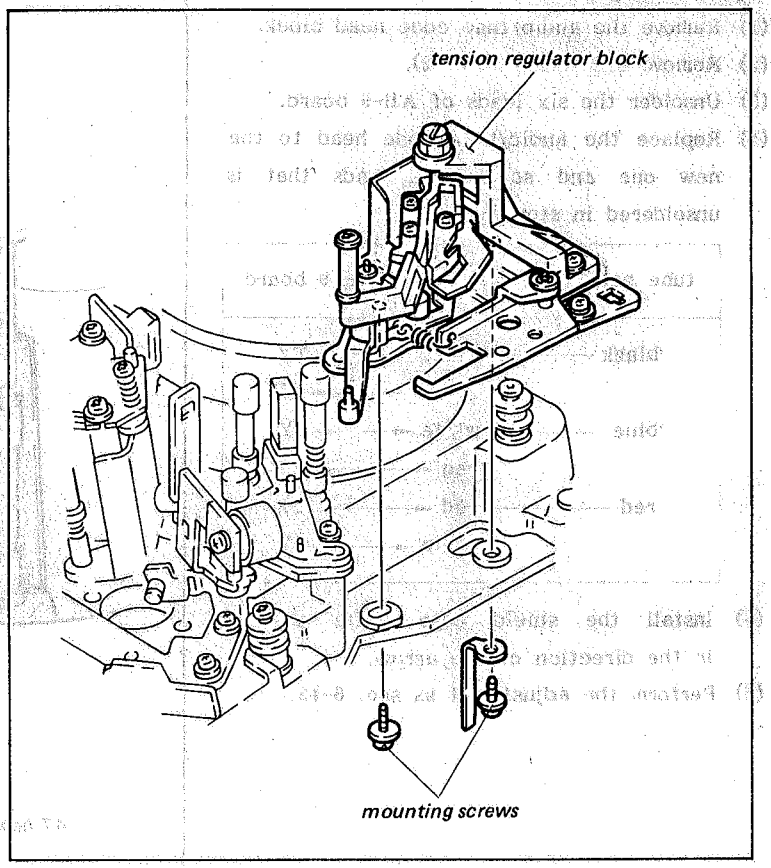

6-8-2. Replacement of Tension Regulator Arm

Replacement procedure:

(1) Put the machine into the unthreading end mode.

(2) Remove the T.DME shield plate.

(3) Remove the tension regulator arm.

(4) After replacement, perform the adjustment as sec. 6-13.

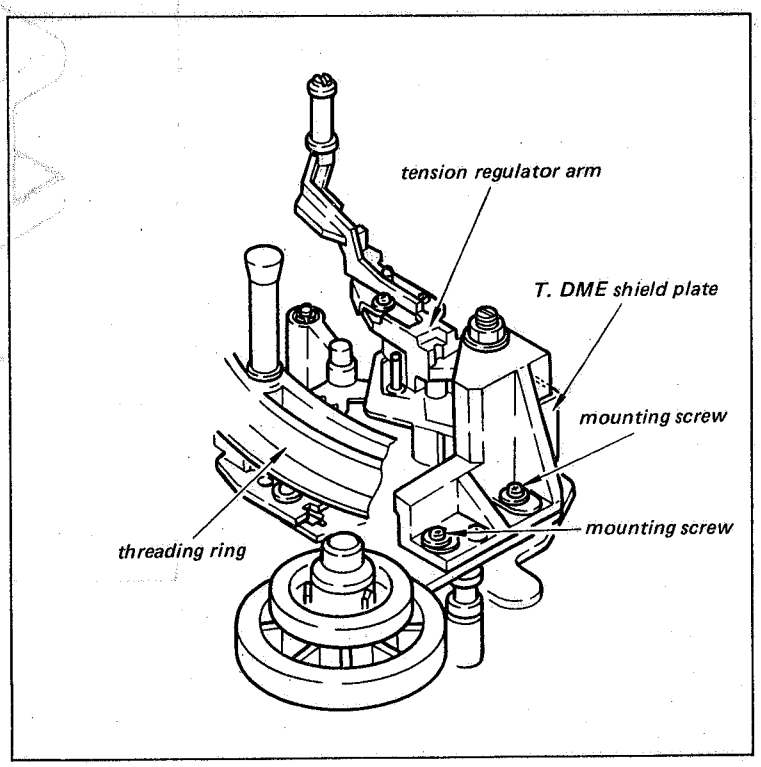

6-9. REPLACEMENT OF TENSION REGULATOR BLOCK. DME

Since the DME of the tension regulator block is pasted with a locking compound to the DME holder, replace the following two parts simultaneously.

DME (DM 208) : 8-745-208-00

DME holder : 3-675-868-00

Replacement procedure:

(1) Disconnect the connector on the TR-14 board on the back of the chassis.
Remove the tension regulator arm as sec. 6-8-2.

(2) Remove the TR-14 board from the tension regulator block.
Remove the DME from the TR-14 board.

(3) Bend the four leads of the DME so that it can be through the hole of the DME holder.

(4) Apply an adhesive compound such as epoxy resin at the DME holder as shwon in figure.

(5) Insert the DME that leads is bent in step (3) to the DME holder. Bend again the four leads of the DME while holding the DME not to make clearance.

(6) Cut the four leads of the DME as specified size.

(7) Solder the DME block on the TR-14 board.

(8) Attach the DME block on the TR-14 board with an adhesive compound such as epoxy resin.
(Never out the adhesive compound from the * marked portion of the DME holder.)

(9) After replacement, perform the adjustment as sec. 6-13.

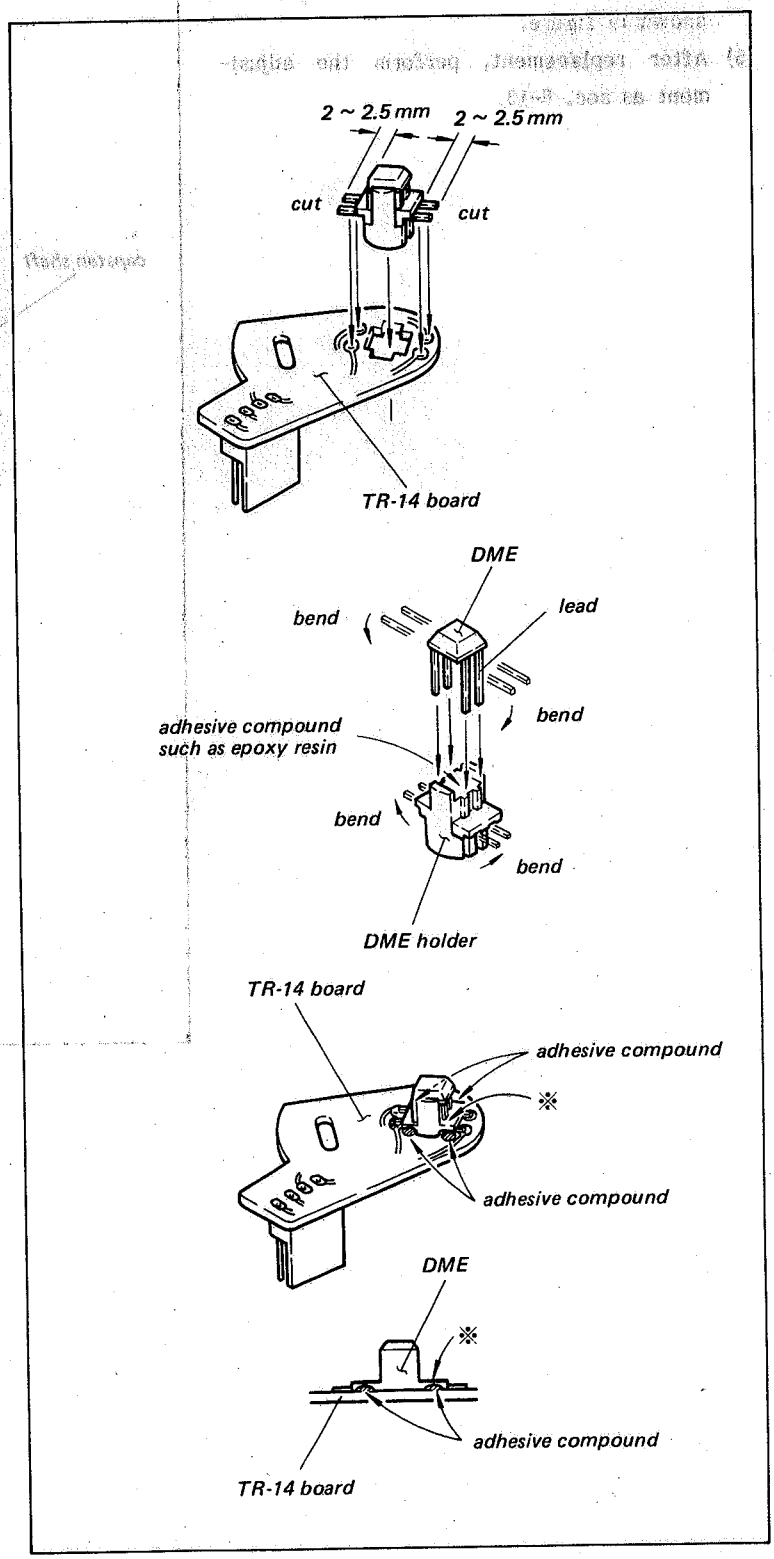

6-10. REPLACEMENT OF ROTATION DETECTOR BLOCK

Replacement procedure:

(1) Remove the threading ring as sec. 6-12.

(2) Remove the rotation detector block.

(3) Replace the defective parts.

(4) Solder the harness on the LE board as shown in figure.

(5) After replacement, perform the adjustment as sec. 6-13.

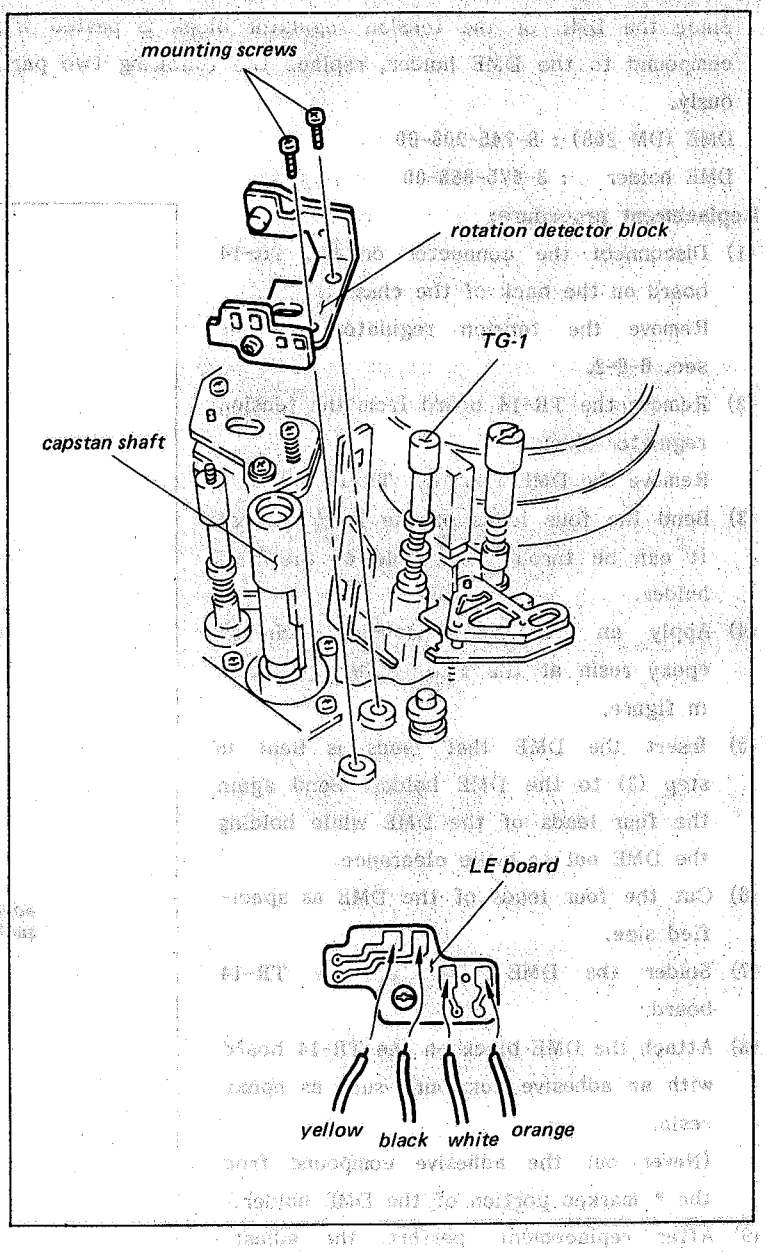

6-11. REPLACEMENT OF THREADING MOTOR

Replacement procedure:

(1) Remove the connector, CN1/LM-4 board of the gear box block on the back of the set.

(2) Remove the gear box.

(3) Remove the LM pulley (2) from the threading motor and install it on the new threading motor so that the clearance between the pulley and the motor meets the required specification.

(4) After replacement, perform the adjustment as sec. 6-13.

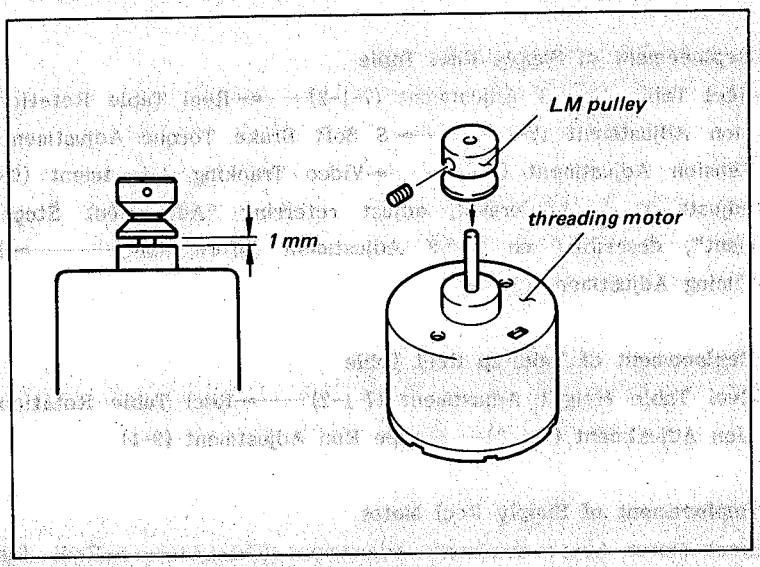

6-12. REPLACEMENT OF THREADING RING

Replacement procedure:

(1) Turn the pulley of the gear box with hand till the threading ring places just before threading completion state.

(2) Loosen the mounting screw of the gear box and disengage the threading ring and the drive gear.

(3) Loosen the mounting screw of the tape beginning sensor and move the tape beginning sensor to the oposite direction of the threading ring.

(4) Loosen the mounting screw of the ring roller (B) ass'y and cancel the holding of the threading ring.

(5) Replace the threading ring.

(6) After replacement, perform the adjustment as sec. 6-13.

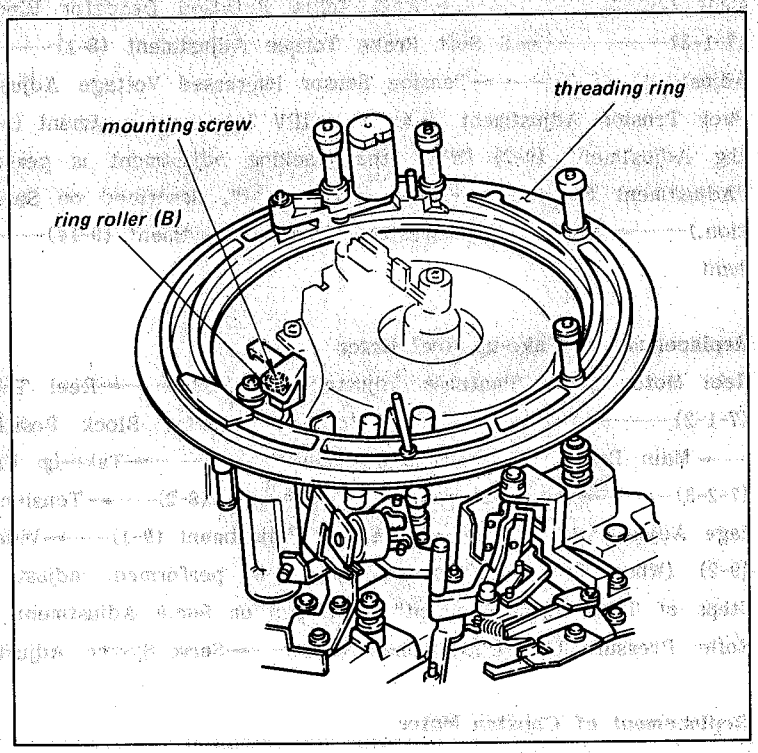

6-13. ADJUSTMENT ITEM TABLE MAIN PARTS REPLACEMENT

Replacement of Supply Reel Table

Reel Table Height Adjustment (7-1-2) ⟶ Reel Table Rotation Detector Block Position Adjustment (7-1-3) ⟶ S Soft Brake Torque Adjustment (8-1) ⟶ FWD Back Tension Adjustment (8-4) ⟶ Video Tracking Adjustment (9-2) (When the tracking adjustment is performed, adjust referring "Adjustment Steps of Tracking Adjustment", described on Sec.9 Adjustment Information.) ⟶ Pinch Roller Pressure Timing Adjustment (9-14)

Replacement of Take-up Reel Table

Reel Table Height Adjustment (7-1-2) ⟶ Reel Table Rotation Detector Block Position Adjustment (7-1-3) ⟶ Tape Run Adjustment (9-1)

Replacement of Supply Reel Motor

Reel Motor Shaft Slantness Adjustment (7-1-1) ⟶ Reel Table Height Adjustment (7-1-2) ⟶ Main Brake Clearance Adjustment (7-2-1) ⟶ Supply Soft Brake Adjustment (7-2-2) ⟶ Reel Table Rotation Detector Block Position Adjustment (7-1-3) ⟶ S Soft Brake Torque Adjustment (8-1) ⟶ Reel Motor Torque Adjustment (8-2) ⟶ Tension Sensor Impressed Voltage Adjustment (8-3) ⟶ FWD Back Tension Adjustment (8-4) ⟶ REV Tension Adjustment (8-5) ⟶ Video Tracking Adjustment (9-2) (When the tracking adjustment is performed, adjust referring "Adjustment Steps of Tracking Adjustment", described on Sec.9 Adjustment Information.) ⟶ Pinch Roller Pressure Timing Adjustment (9-14) ⟶ Servo System Adjustment

Replacement of Take-up Reel Motor

Reel Motor Shaft Slantness Adjustment (7-1-1) ⟶ Reel Table Height Adjustment (7-1-2) ⟶ Reel Table Rotoation Detector Block Position Adjustment (7-1-3) ⟶ Main Brake Clearance Adjustment (7-2-1) ⟶ Take-up Pause Brake Adjustment (7-2-3) ⟶ Reel Motor Torque Adjustment (8-2) ⟶ Tension Sensor Impressed Voltage Adjustment (8-3) ⟶ Tape Run Adjustment (9-1) ⟶ Video Tracking Adjustment (9-2) (When the tracking adjustment is performed, adjust referring "Adjustment Steps of Tracking Adjustment", described on Sec.9 Adjustment Information.) ⟶ Pinch Roller Pressure Timing Adjustment (9-14) ⟶ Servo System Adjustment

Replacement of Capstan Motor

Pinch Press Mechanism Block Position Adjustment (7-4-2) ⟶ Tape Run Adjustment (9-1) ⟶ Video Tracking Adjustment (9-2) (When the tracking adjustment is performed, adjust referring "Adjustment Steps of Tracking Adjustment", described on Sec.9 Adjustment Information.) ⟶ Pinch Roller Pressure Timing Adjustment (9-14) ⟶ Servo System Adjustment

Replacement of Threading Motor

Gear Block Position Adjustment (7-3-2) ⟶ Servo System Adjustment

eplacement of Threading Ring

eplacement of Rotation Detector Block

Threading Ring Rotation Adjustment (7-3-1)——►Gear Box Position Adjustment (7-3-2)——►Ring Arm Position Adjustment (7-3-3)——►TE-2 Block Position Adjustment (7-3-4)——►TE-3 Block Position Adjustment (7-3-5)——►Tension Regulator Hook Arm Release Adjustment (7-5-2)——►Hook Adjustment Plate Position Adjustment (7-5-3)——►END Sensor Position Adjustment (7-7)——►Pinch Release Arm Position Adjustment (7-8)——►Tape Run Adjustment (9-1)——►Video Tracking Adjustment (9-2) (When the tracking adjustment is performed, adjust referring "Adjustment Steps of Tracking Adjustment", described on Sec.9 Adjustment Information.) ——►Pinch Roller Pressure Timing Adjustment (9-14)

eplacement of Tension Regulator

Replacement of Tension Regulator Arm

eplacement of Tension Regulator Arm. DME

ll Adjustments described on Replacement of Threading Ring——►Tension Regulator System Adjustment (7-5)——►FWD Back Tension Adjustment (8-4)——►REV Tension djustment (8-5)——►Video Tracking Adjustment (9-2) (When the tracking adjustment is performed, adjust referring "Adjustment Steps of Tracking Adjustment", described on Sec.9 Adjustment Information.)——►Pinch Roller Pressure Timing djustment (9-14)

Replacement of CTL Head

CTL Porality Check (9-4)——►CTL Head Azimuth/Zenith Adjustment (9-8)——►CTL Head Height Adjustment (9-9)——►Video Tracking Adjustment (9-2) (When the tracking adjustment is performed, adjust referring "Adjustment Steps of Tracking Adjustment", described on Sec.9 Adjustment Information.)——►CTL Head Position Adjustment (9-5)——►TC Head Position Adjustment (9-6)——►Pinch Roller Pressure Timing Adjustment (9-14)——►Servo System Adjustment

Replacement of Audio/TC Head

Audio/TC Head Zenith Adjustment (9-10)——►Audio Head Height Adjustment (9-11) ——►Audio Head Tape-to-Head Contact Adjustment (9-12)——►Audio Head Phase Adjustment (9-13)——►Video Tracking Adjustment (9-2) (When the tracking adjustment is performed, adjust referring "Adjustment Steps of Tracking Adjustment", described on Sec.9 Adjustment Information.)——►TC Head Position Adjustment (9-6) ——►Audio System Adjustment

Replacement of Drum Assembly

Servo System Adjustment——►(When the tracking adjustment is performed, adjust referring "Adjustment Steps of Tracking Adjustment", described on Sec.9 Adjustment Information.)——►Slip-ring Brush Position Adjustment (9-15)——►Video System Adjustment

Replacement of Upper Drum Assembly

Upper Drum Eccentricity Adjustment (6-3)——►Video Tracking Adjustment (9-2)
(When the tracking adjustment is performed, adjust referring "Adjustment Steps of Tracking Adjustment", described on Sec.9 Adjustment Information.)——►Video Head Dihedral Adjustment (9-3)——►CTL Head Position Adjustment (9-5)——►TC Head Position Adjustment (9-6)——►Switching Position Adjustment(9-7)——►Slip-ring Brush Position Adjustment (9-15)——►Pinch Roller Pressure Timing Adjustment (9-14)——►Video System adjustment

SECTION 7
LINK AND DRIVE SYSTEM ALIGNMENT

ALIGNMENT INFORMATION

MODE

- **Unthreading end mode**

  It means EJECT completion mode.
  The tension regulator arm and threading ring are put back at the cassette tape side completely.

- **Threading mode**

  Press the PLAY button. Threading mode means that the threading ring is rotating in counterclockwise direction.

- **Threading end mode**

  Press the PLAY button. The threading ring is rotating in counter-clockwise direction, and then the threading ring rotation is stopped. This state means the threading end mode.

- **PLAY mode without cassette tape**

  Press the PLAY button. The threading ring is rotating in counter-clockwise direction, and the pinch roller is pressed against the capstan shaft after the threading ring rotation is stopped. This state means the PLAY mode without tape.

- **STNADBY OFF mode without tape**

(1) Put the machine into the PLAY mode without tape. (Refer to "PLAY mode without tape".)
(2) Press the STOP button. Then, the pinch roller is disengaged from the capstan shaft.
(3) Press the STANDBY button. Then, the machine put into the STANDBY OFF mode. (The drum rotation is stopped in the STANDBY OFF mode.)

- **REV mode without tape**

(1) Put the machine into the PLAY mode without tape. (Refer to "PLAY mode without tape".)
(2) Turn the SEARCH DIAL in counterclockwise direction. Then, the machine put into the REV mode.

SECTION 7
LINK AND DRIVE SYSTEM ALIGNMENT

ALIGNMENT INFORMATION

MODE

. Unthreading end mode

It means EJECT completion mode.

The tension regulator arm and threading ring are put back at the cassette tape side completely.

. Threading mode

Press the PLAY button. Threading mode means that the threading ring is rotating in counterclockwise direction.

. Threading end mode

Press the PLAY button. The threading ring is rotating in counter-clockwise direction, and then the threading ring rotation is stopped. This state means the threading end mode.

. PLAY mode without cassette tape

Press the PLAY button. The threading ring is rotating in counter-clockwise direction, and the pinch roller is pressed against the capstan shaft after the threading ring rotation is stopped. This state means the PLAY mode without tape.

. STANDBY OFF mode without tape

(1) Put the machine into the PLAY mode without tape. (Refer to "PLAY mode without tape").

(2) Press the STOP button. Then, the pinch roller is disengaged from the capstan shaft.

(3) Press the STANDBY button. Then, the machine put into the STANDBY OFF mode. (The drum rotation is stopped in the STANDBY OFF mode.)

. REV mode without tape

(1) Put the machine into the PLAY mode without tape (Refer to "PLAY mode without tape").

(2) Turn the SEARCH DIAL in counterclockwise direction. Then the machine put into the REV mode.

7-1. REEL TABLE ADJUSTMENT

. Since the reel motor shaft slantness adjustment and the reel table height adjustment functions as the reference in the entire tape run system, it is requested that these adjustments should be attempted carefully, and deliberately.

7-1-1. Reel Motor Shaft Slantness Adjustment

. This adjustment is required only when the reel motor is replaced or removed.

Mode: Unthreading end

Tool: Cassette reference plate
Reel motor shaft slantness check jig

Check procedure:

(1) Remove the reel table from the reel motor shaft.

(2) Put the cassette reference plate at the position for the cassette.

(3) Check that the clearance between the check jig and the shaft meets the required specification, when the reel motor shaft slantness check jig is set on the reel motor shaft from two directions as shown in figure.

Adjustment procedure:

(1) Insert the reel motor spacer at the reel motor mounting screw as shown in figure.

. video head spacer
0.01mm thick : 3-630-035-01
0.02mm thick : 3-630-035-11
0.03mm thick : 3-630-035-21
0.04mm thick : 3-630-035-31

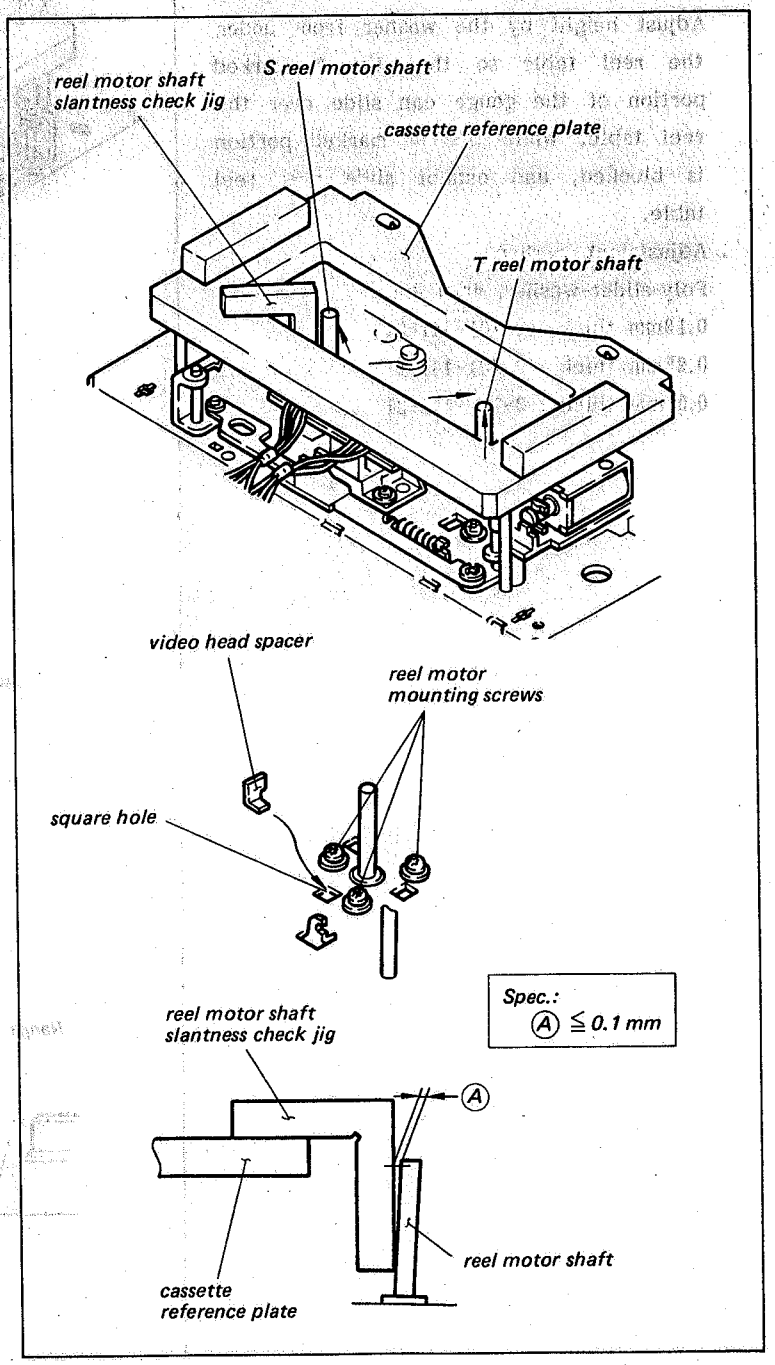

7-1-2. Reel Table Height Adjustment

. This adjustment is required only when the reel motor and reel table replaced or removed.

Mode: Unthreading end

Tool: Cassette reference plate

Allen wrench (each edge has 1.5mm)

Adjustment procedure:

(1) Put the cassette reference plate at the position for the cassette.

(2) Move the gauge as shown in figure. Adjust height by the washer from under the reel table so that the * marked portion of the gauge can slide over the reel table, while the ** marked portion is blocked, and cannot slide over reel table.

. **Adjustment washer**

Poly-slider-washer, 4mm dia.

0.13mm thick : 3-701-441-01

0.25mm thick : 3-701-441-11

0.5 mm thick : 3-701-441-21

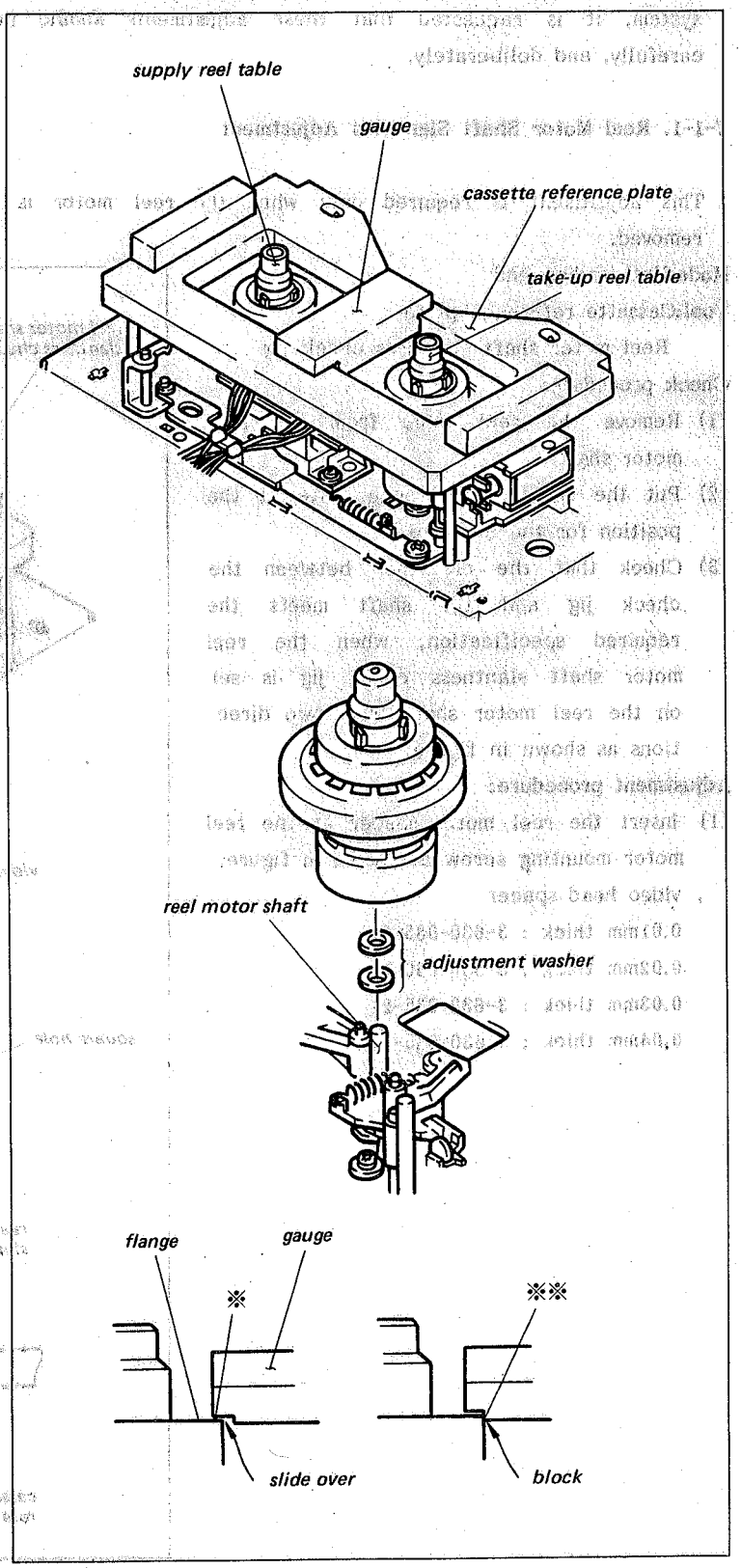

7-1-3. Reel Table Rotation Detector Block Position Adjustment

Mode: Any mode

Tool: Thickness gauge

Check procedure:

(1) Check that the clearances between the supply reel table and the DME on the reel table rotation detector block, and between the take-up reel table and the DME meet the required specification.

Adjustment procedure:

(1) Adjust the position of the reel table rotation detector block to meet the required specification.

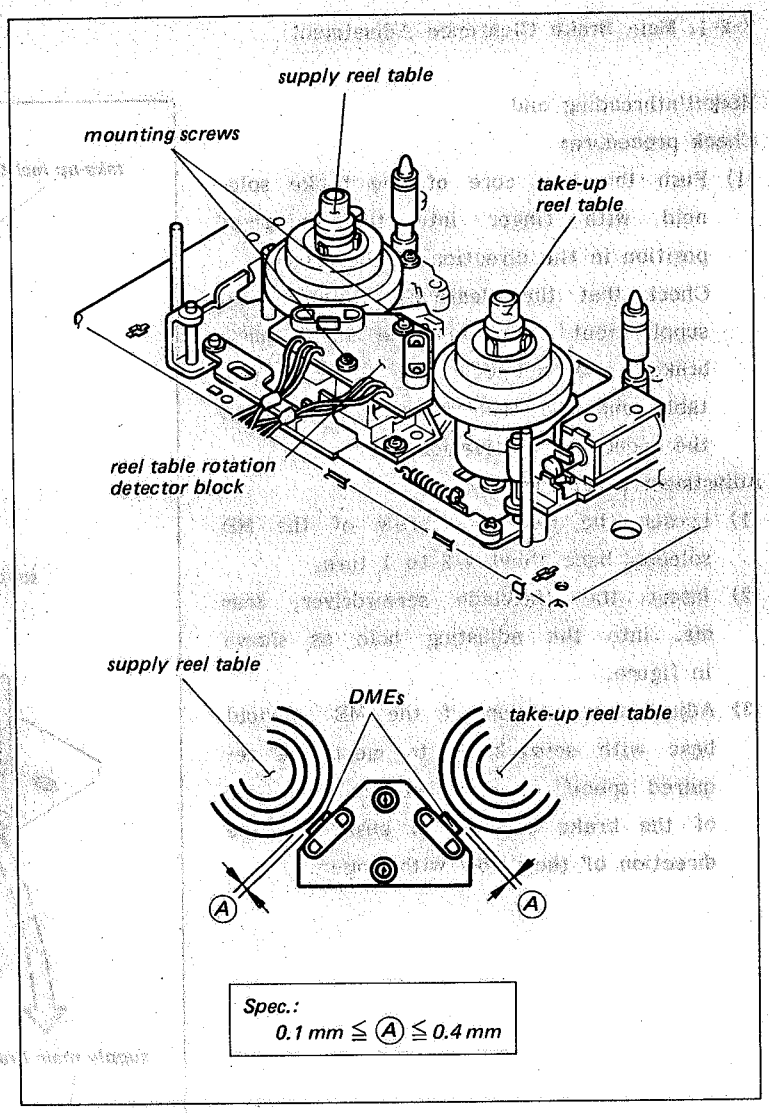

7-2. BRAKE SYSTEM ADJUSTMENT

7-2-1. Main Brake Clearance Adjustment

Mode: Unthreading end

Check procedure:

(1) Push the iron core of the brake solenoid with finger into the energized position in the direction of the arrow. Check that the clearances between the supply reel table and the supply main brake, and between the take-up reel table and the take-up main brake meet the required specification.

Adjustment procedure:

(1) Loosen the mounting screw of the MB solenoid base about 1/2 to 1 turn.

(2) Insert the flatblade screwdriver, 3mm dia. into the adjusting hole as shown in figure.

(3) Adjust the position of the MB solenoid base with screwdriver to meet the required specification, when the iron core of the brake solenoid is pushed in the direction of the arrow with finger.

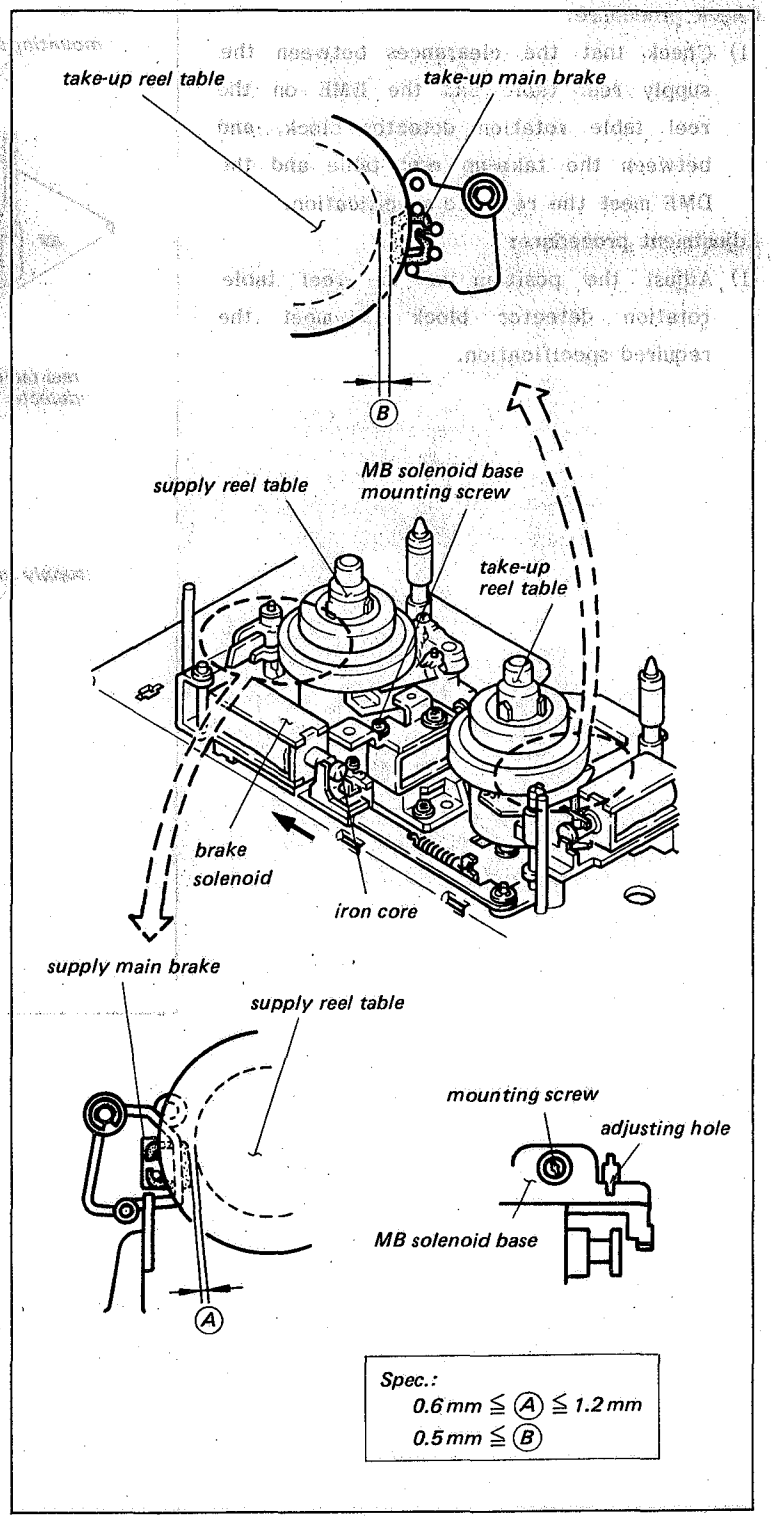

7-2-2. Supply Soft Brake Adjustment

Mode: Unthreading end

Check procedure:

(1) Check that the clearance between the supply reel table and the supply soft brake exists. (Spec. (2))

(2) Push the iron core of the S brake solenoid with finger into the energized position in the direction of the arrow. Check that the clearance between the S brake arm and the S brake limitter meets the required specification. (Spec. (1))

Adjustment procedure:

(1) Remove the reel table rotation detector block.

(2) Loosen the two mounting screws of the S brake soloenid block about 1/2 to 1 turn.

(3) Insert the flatblade screwdriver, 3mm dia. in the adjusting hole as shown in figure.

(4) Adjust the position of the S brake solenoid block with screwdriver to meet the required specification (1), when the iron core of the S brake solenoid is pushed with finger in the direction of the the arrow.

(5) After adjustment, take finger off and check that the required specification (2) is met.

(6) After adjustment, install the reel table rotation detector block and adjust it's position.

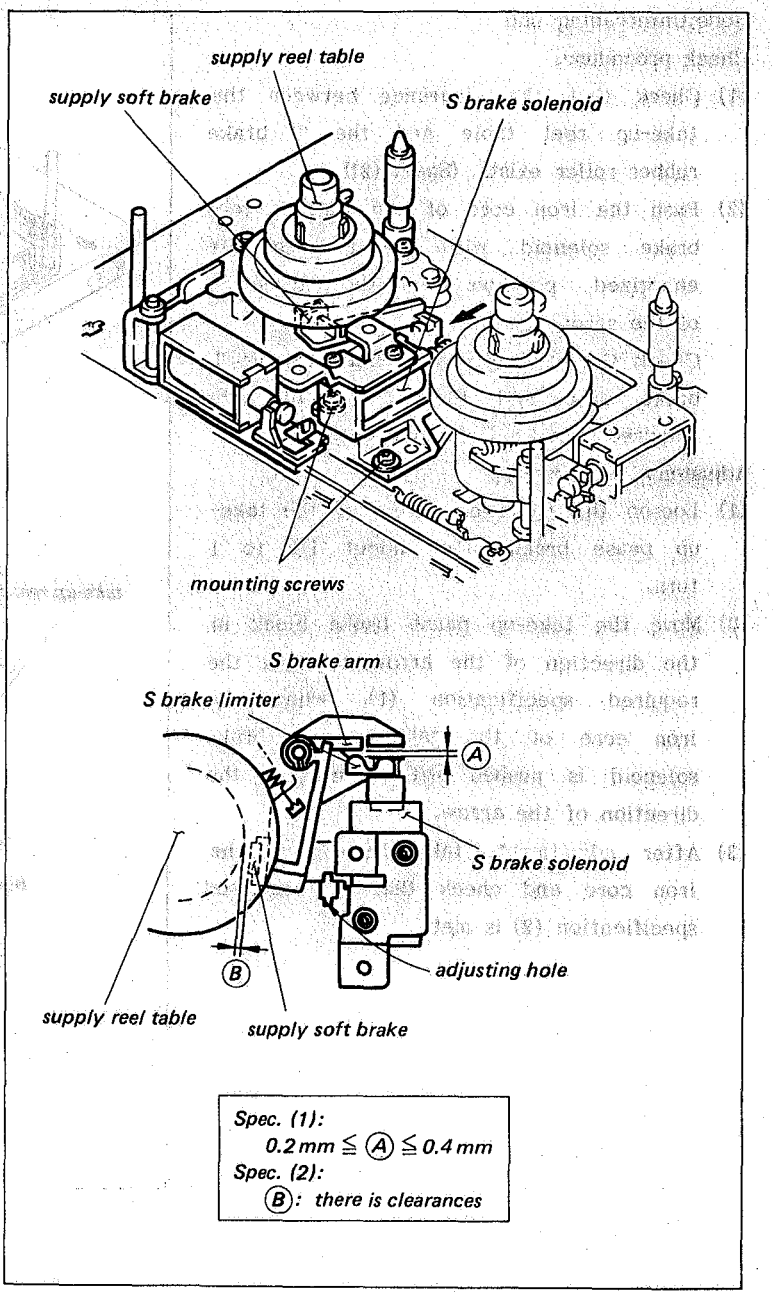

7-2-3. Take-up Pause Brake Adjustment

Mode: Unthreading end

Check procedure:

(1) Check that the clearance between the take-up reel table and the T brake rubber roller exists. (Spec. (2))

(2) Push the iron core of the take-up reel brake solenoid with finger into the energized position in the direction of the arrow.
Check that the clearance between the T brake base and the boss meets the required specification. (Spec. (1))

Adjustment procedure:

(1) Loosen the mounting screw of the take-up pause brake block about 1/2 to 1 turn.

(2) Move the take-up pause brake block in the direction of the arrow to meet the required specification (1), when the iron core of the take-up reel brake solenoid is pushed with finger in the direction of the arrow.

(3) After adjustment, take finger off the iron core and check that the required specification (2) is met.

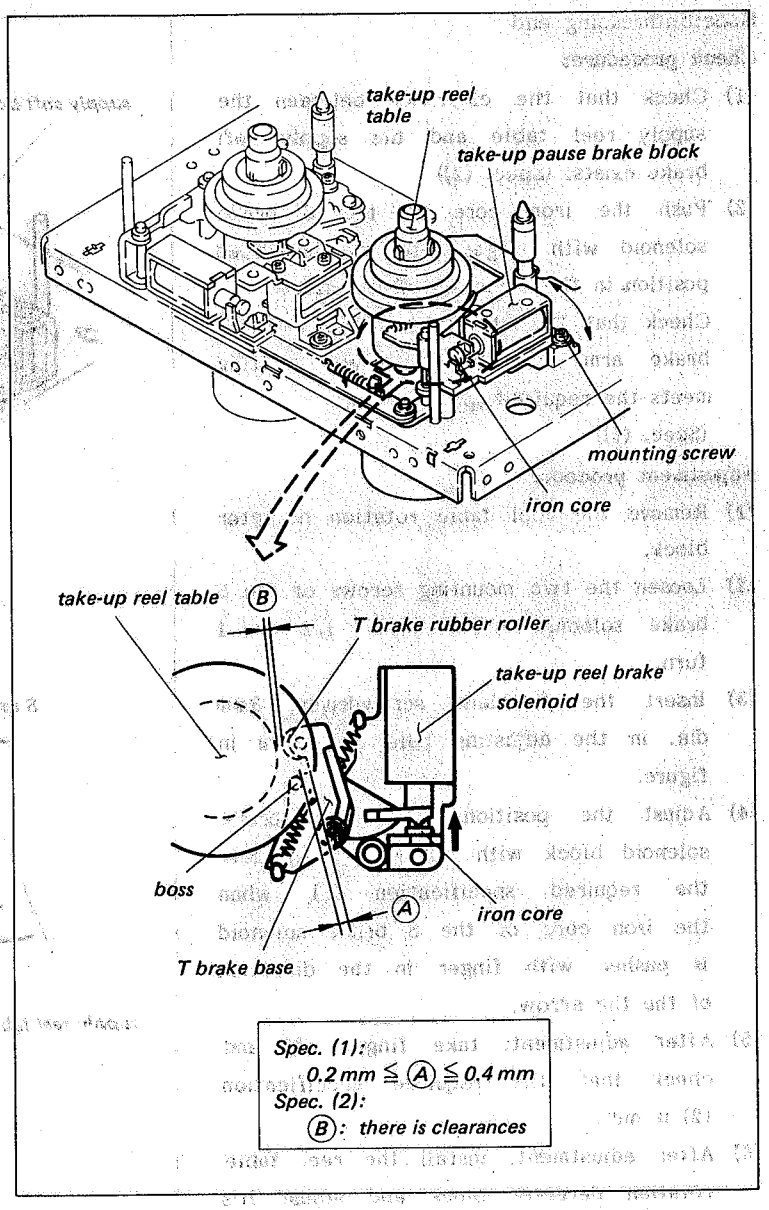

7-3. THREADING RING SYSTEM ADJUSTMENT

7-3-1. Threading Ring Rotation Adjustment

. This adjustment is required only when the threading ring or ring roller (B) ass'y is replaced or removed.

Mode: Turn the power off while rotating the threading ring 180 degrees from unthreading end state.

Check procedure:

(1) Check that the horizontal play meets the required specification when the threading ring is pushed in the direction of the arrow with finger.

(2) Check that the rotation of the threading ring into the threading and unthreading modes are smooth.

Adjustment procedure:

(1) Adjust the position of the ring roller (B) ass'y to meet the required specification.

Adjusting procedure;

.Insert a 0.3mm thick paper between the threading ring and the ring roller.

.Paper of this manual is about 0.1mm thick so that three fold becomes 0.3mm thick.

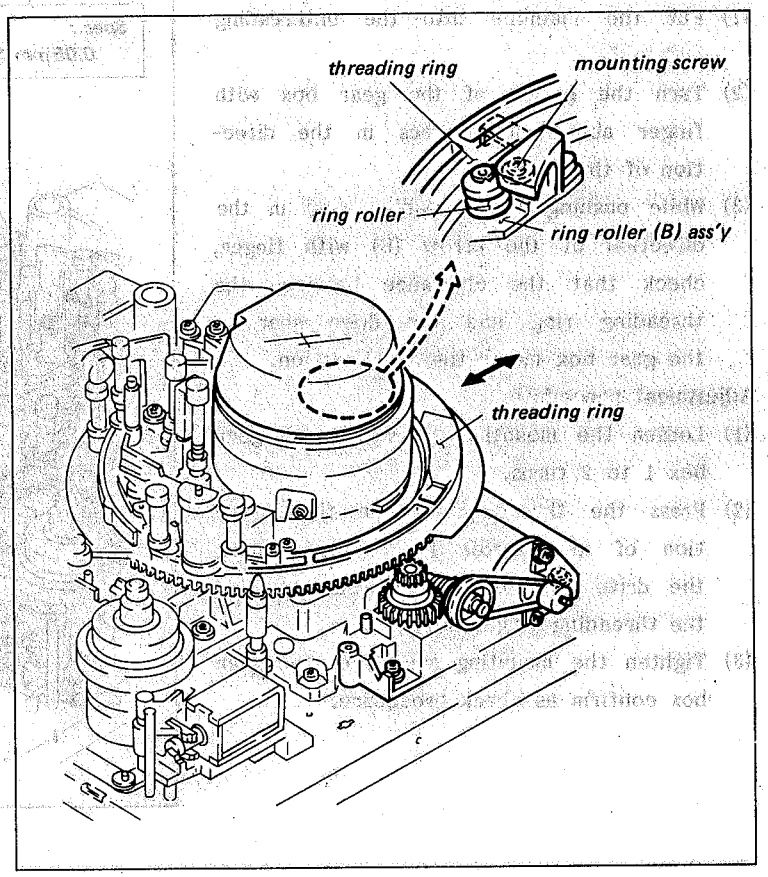

7-3-2. Gear Box Position Adjustment

. It is required that the sec. 7-3-1 threading ring rotation adjustment is checked to be correct or properly adjusted before initiating this adjustment.

Check procedure:

(1) Put the machine into the unthreading end mode.

(2) Turn the pulley of the gear box with finger about 90 degrees in the direction of the arrow.

(3) While pushing the threading ring in the direction of the arrow (B) with finger, check that the clearance between the threading ring and the drive gear of the gear box meets the specification.

Adjustment procedure:

(1) Loosen the mounting screws of the gear box 1 to 2 turns.

(2) Press the threading ring in the direction of the arrow (A), while pushing the drive gear of the gear box against the threading ring lightly.

(3) Tighten the mounting screws of the gear box confirm as check procedure.

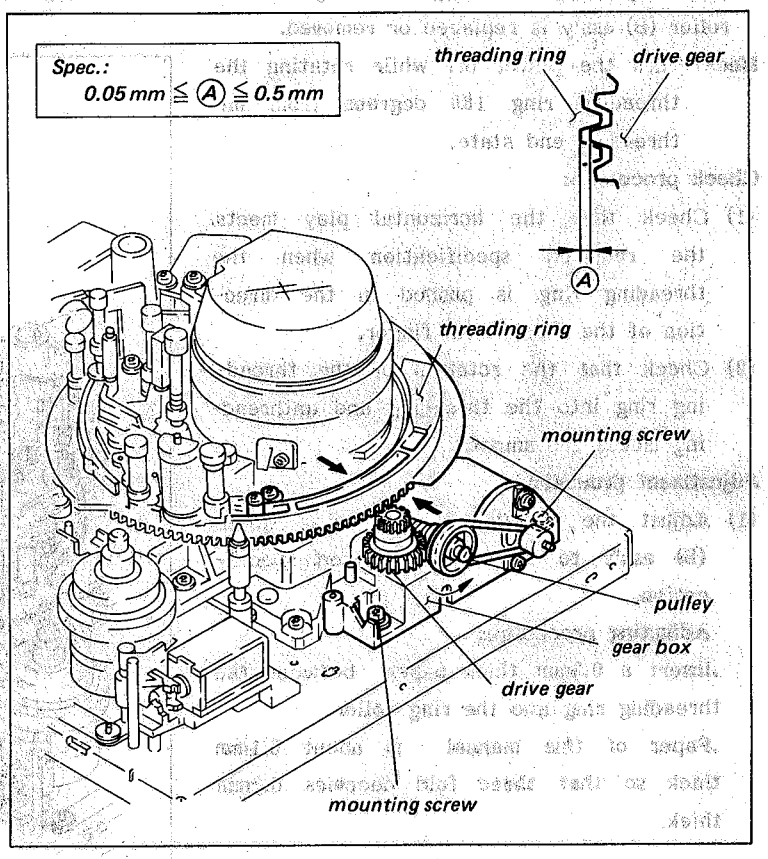

7-3-3. Ring Arm Position Adjsutment

Mode: Threading end

Check procedure:

(1) Check that the clarance (A) between the release arm and the ring arm meets the specification (1).

(2) Check that the clearance (B) between the threading ring and the roller of the ring arm meets the specification (2).

Adjustment procedure:

(1) Move the ring arm position in the direction of the arrow (D) so that it meets the specifications (1) and (2).

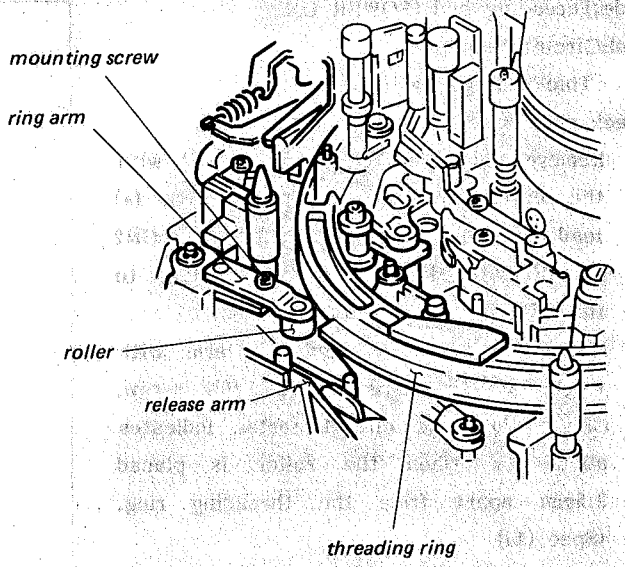

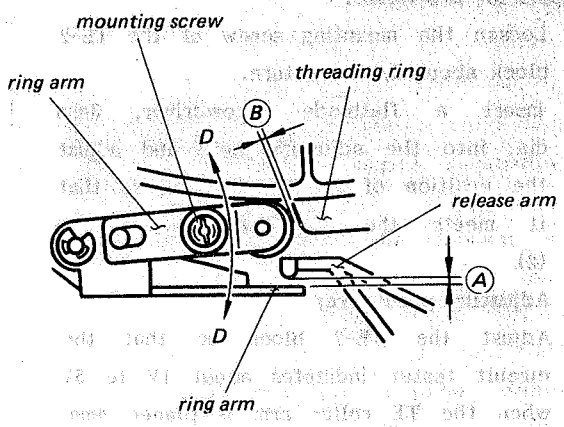

Spec. (1):
0.1 mm ≦ (A) ≦ 0.3 mm
Spec. (2):
(B) ≦ 0.2 mm

7-3-4. TE-2 Block Position Adjustment

. The threading end detection is performed in the TE-2 block.

Mode: Threading end (POWER ON)

Tool: Circuit tester

Thickness gauge

Check procedure:

(1) Remove the SY-91 board. Extend it with the extension board. Connect the (+) lead of the circuit tester to the CN2 pin13B/SY-91 board and the (-) lead to the CN1 pin30/SY-91 board.

(2) Move the roller of the TE arm with finger in the direction of the arrow. Check that the circuit tester indicates about 1V when the roller is placed 3.5mm apart from the threading ring. (Spec (1))

(3) Check that the circuit tester indicates about 5V when the roller is placed 4.5mm apart from the threading ring. (Spec (2))

Adjustment procedure:

(1) Loosen the mounting screw of the TE-2 block about 1/2 to 1 turn.

(2) Insert a flatblade screwdriver, 3mm dia. into the adjusting hole and adjust the position of the TE-2 block so that it meets the specifications (1) and (2).

Adjusting procedure;

Adjust the TE-2 block so that the circuit tester indicates about 1V to 5V when the TE roller arm is placed 4mm apart from the threading ring.

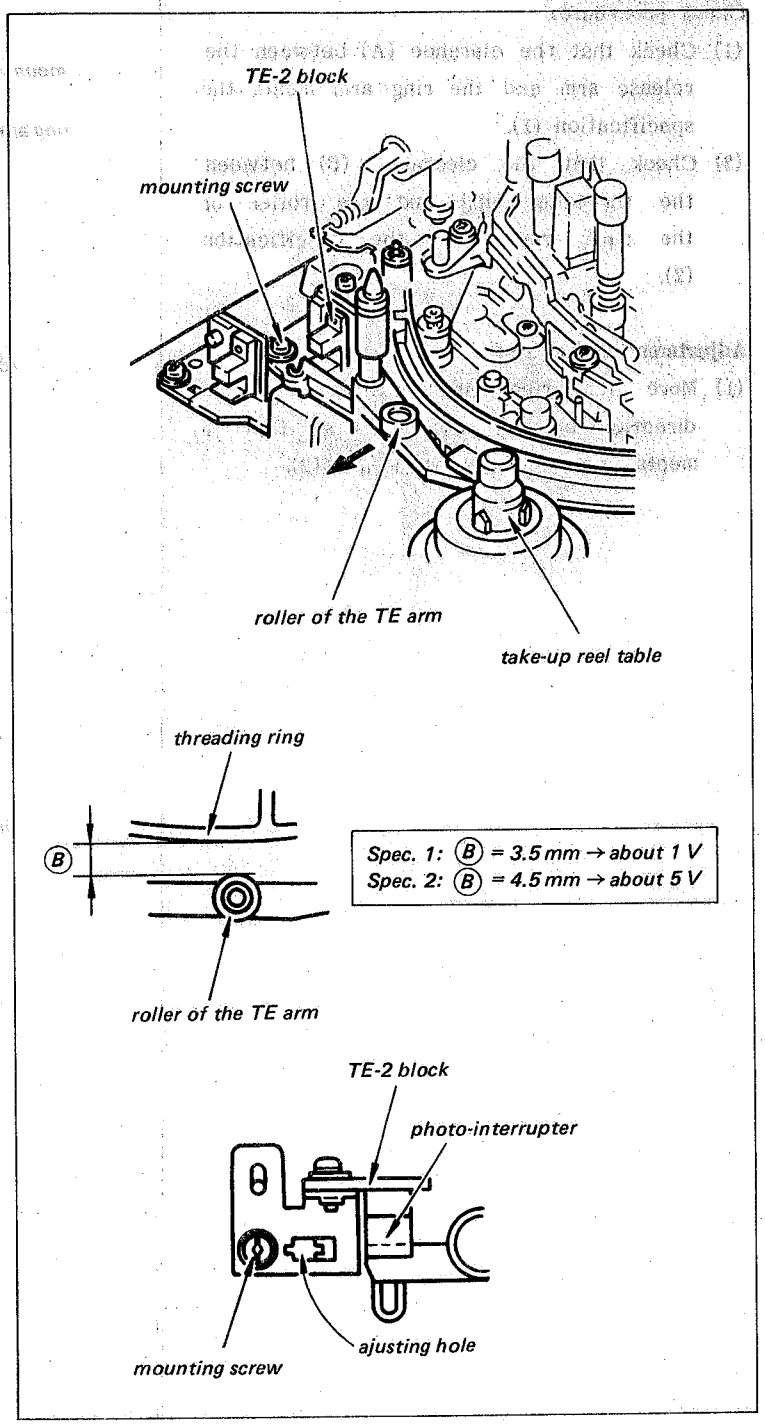

7-3-5. TE-3 Block Position Adjustment

. The threading end and the unthreading end detections are performed in the TE-3 block.

Mode: Threading end (POWER ON)

Tool: Circuit tester

Thickness gauge

Check procedure:

(1) Remove the SY-91 board. Extend it with the extension board. Connect the (+) lead of the circuit tester to the CN2 pin14B/SY-91 board and the (-) lead to the CN1 pin30/SY-91 board.

(2) Move the roller of the ring arm with finger in the direction of the arrow. Check that the circuit tester indicates about 1V when the roller is placed 3.5mm apart from the threading ring. (Spec.(1))

(3) Check that the circuit tester indicates about 5V when the roller is placed 4.5mm apart from the threading ring. (Spec (2))

Adjustment procedure:

(1) Loosen the mounting screw of the TE-3 block about 1/2 to 1 turn.

(2) Insert a flatblade screwdriver, 3mm dia. into the adjusting hole and adjust the TE-3 block position to meet the specifications (1) and (2).

Adjusting procedure;

Adjust the TE-3 block so that the circuit tester indicates about 1V to 5V when the ring arm roller is placed 4mm apart from the threading ring.

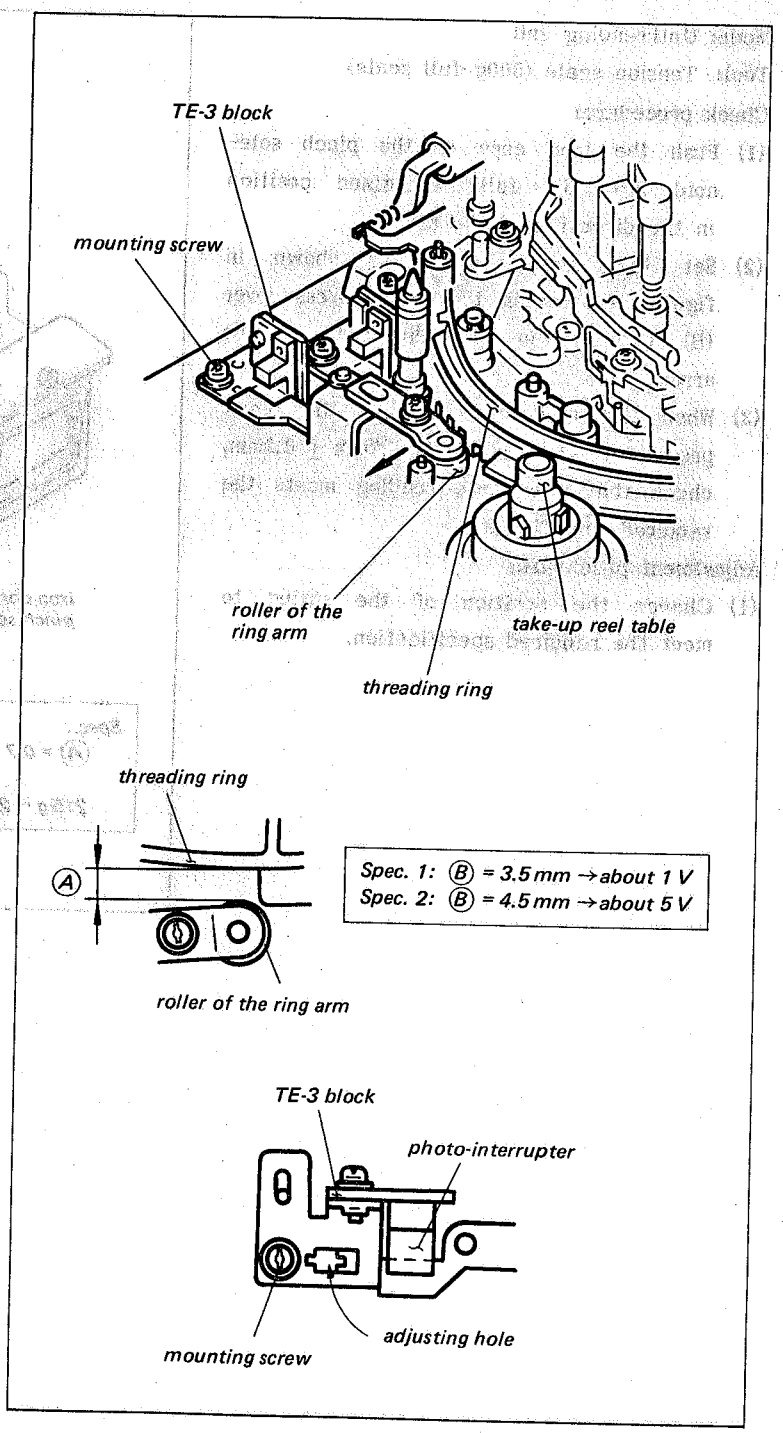

7-4. PINCH PRESS MECHANISM BLOCK ADJUSTMENT

7-4-1. Pinch Roller Pressure Adjustment

Mode: Unthreading end

Tool: Tension scale (500g full scale)

Check procedure:

(1) Push the iron core of the pinch solenoid into the fully energized position in the direction of the arrow.

(2) Set the tension scale as shown in figure, and press the pinch press lever (B) with it in the direction of the arrow.

(3) When the clearance between the pinch press lever (A) and (B) is 0.7mm ± 0.2mm, check that the scale reading meets the required specification.

Adjustment procedure:

(1) Change the position of the spring to meet the required specification.

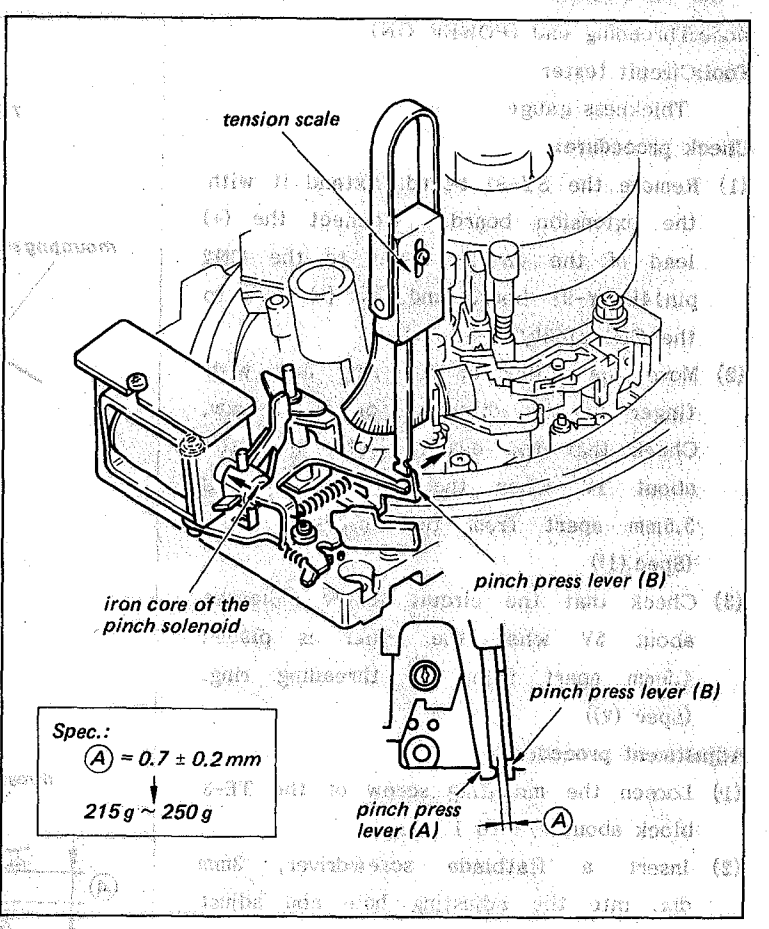

-4-2. Pinch Press Mechanism Block Position Adjustment

Mode: PLAY mode without cassette tape

Check procedure:

(1) Put the machine into the PLAY mode without cassette tape.

(2) Check that the clearance between the pinch press levers (A) and (B) meets the required specification.

Adjustment procedure:

(1) Loosen the mounting screws of the pinch press mechanism block about 1/2 to 1 turn.

(2) Insert a flatblade screwdriver, 3mm dia. into the notch of the pinch press mechanism, and adjust the pinch press mechanism position to meet the required specification.

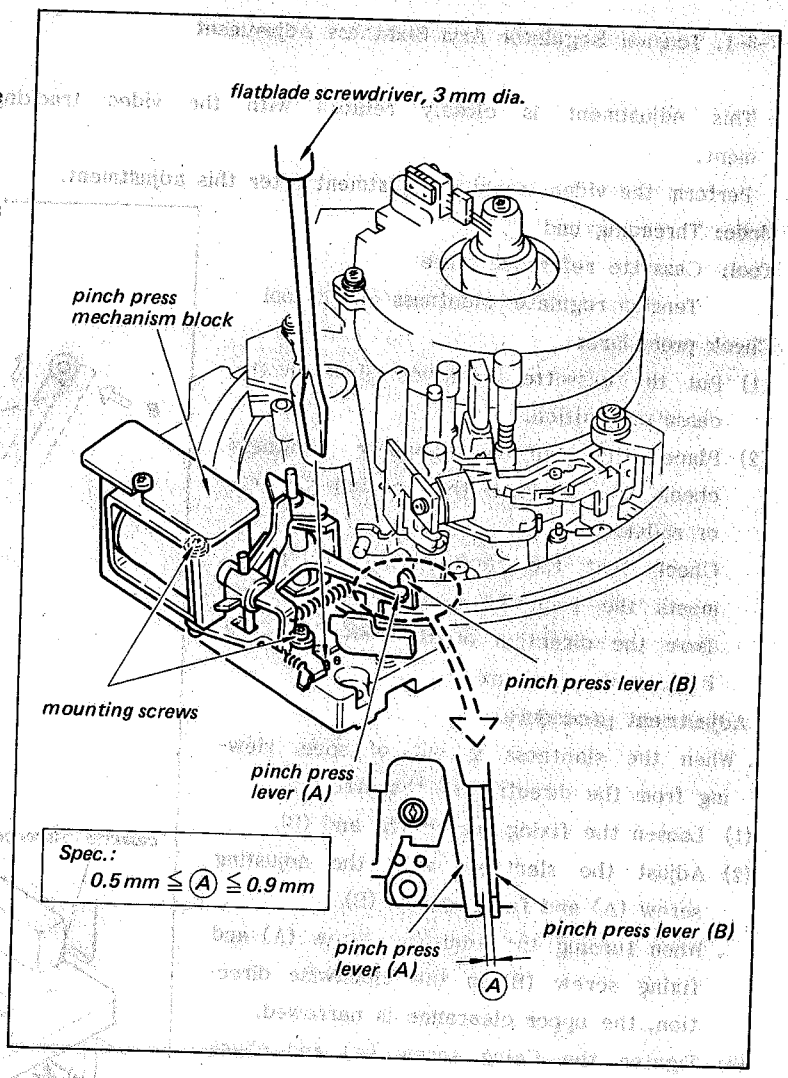

7-5. TENSION REGULATOR SYSTEM ADJUSTMENT

7-5-1. Tension Regulator Arm Slantness Adjustment

. This adjustment is closely related with the video tracking adjustment.

. Perform the video tracking adjustment after this adjustment.

Mode: Threading end

Tool: Cassette reference plate
Tension regulator slantness check tool

Check procedure:

(1) Put the cassette reference plate in the cassette position.

(2) Place the tension regulator slantness check tool against the tension regulator roller.
Check that the slantness of the roller meets the required specification viewing from the direction of the arrows A and B as shown in figure.

Adjustment procedure:

. When the slantness is out of spec. viewing from the direction of the arrow A:

(1) Loosen the fixing screws (A) and (B).

(2) Adjust the slantness with the adjusting screw (A) and fixing screw (B).

. When turning the adjusting screw (A) and fixing screw (B) in the clockwise direction, the upper clearance is narrowed.

(3) Tighten the fixing screw (A) and check again.

(4) After adjustment, perform the step (8).

. When the slantness is out of spec. viewing from the direction of the arrow B.

(5) Loosen the fixing screws (A) and (C).

(6) Adjust the slantness with the adjusting screw (B).

. When turning the adjusting screw (B) in the counterclockwise direction, the upper clearance is more narrow.

(7) Tighten the fixing screws in order of (C),(A) and check again.

(8) After adjustment, perform the following adjustments.
Sec.9-2 Video Tracking Adjustment
Sec.7-5-4 Tension Regulator Arm Position Adjustment

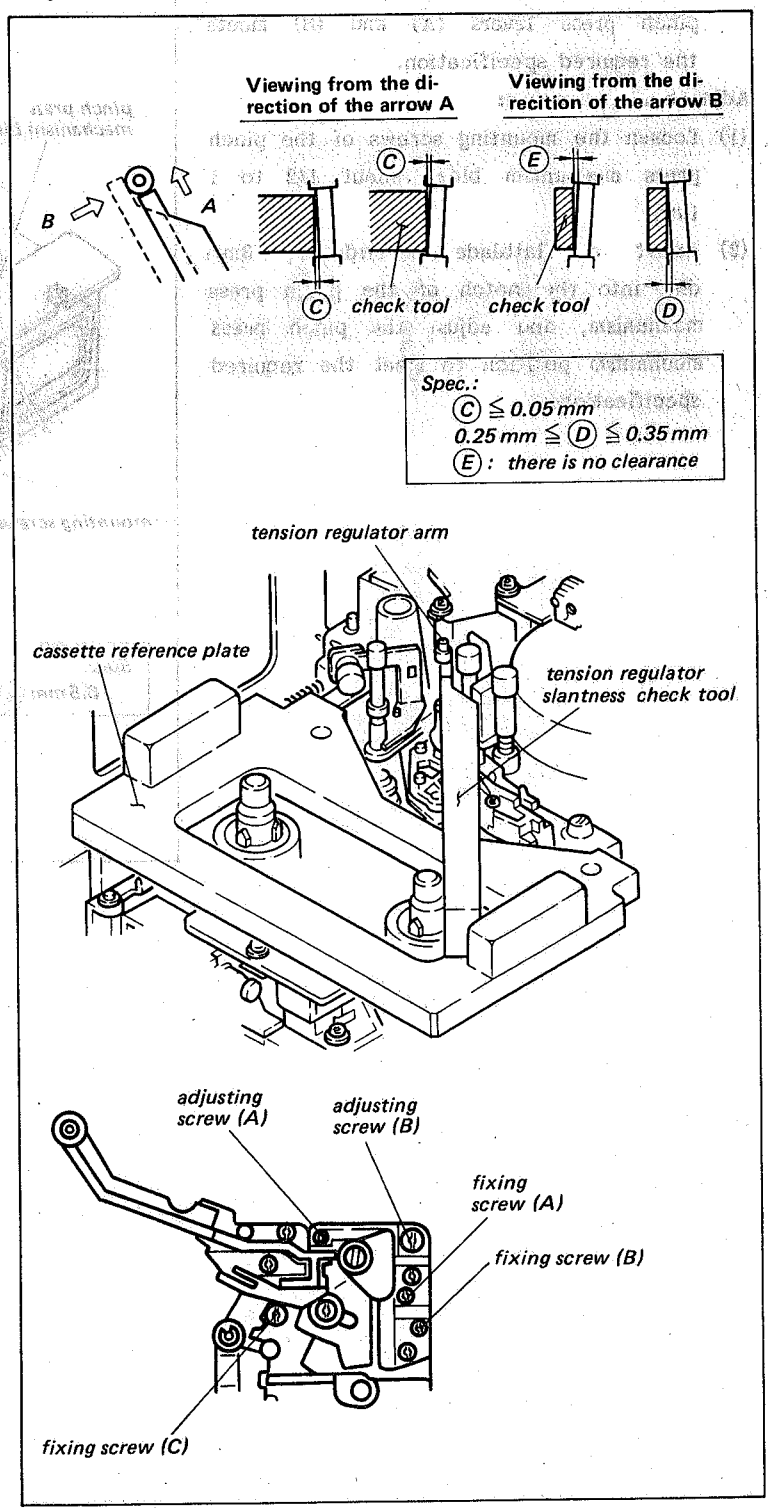

7-5-2. Tension Regulator Hook Arm Release Adjustment

Check procedure:

(1) Start the threading and turn the power off when the threading ring rotate 180 degrees from unthreading end state.

(2) Check that the clearance between the tension regulator hook arm and the return arm pin meets the required specification.

Adjustment procedure:

(1) Loosen the mounting screw of the hook adjusting plate about 1/2 to 1 turn.

(2) Insert a flatblade screwdriver 3mm dia. into the adjusting hole. Adjust the position of the hook adjusting plate so that it meets the required specification.

(3) After adjustment, perform sec. 7-5-3, Hook Adjusting Plate Position Adjustment.

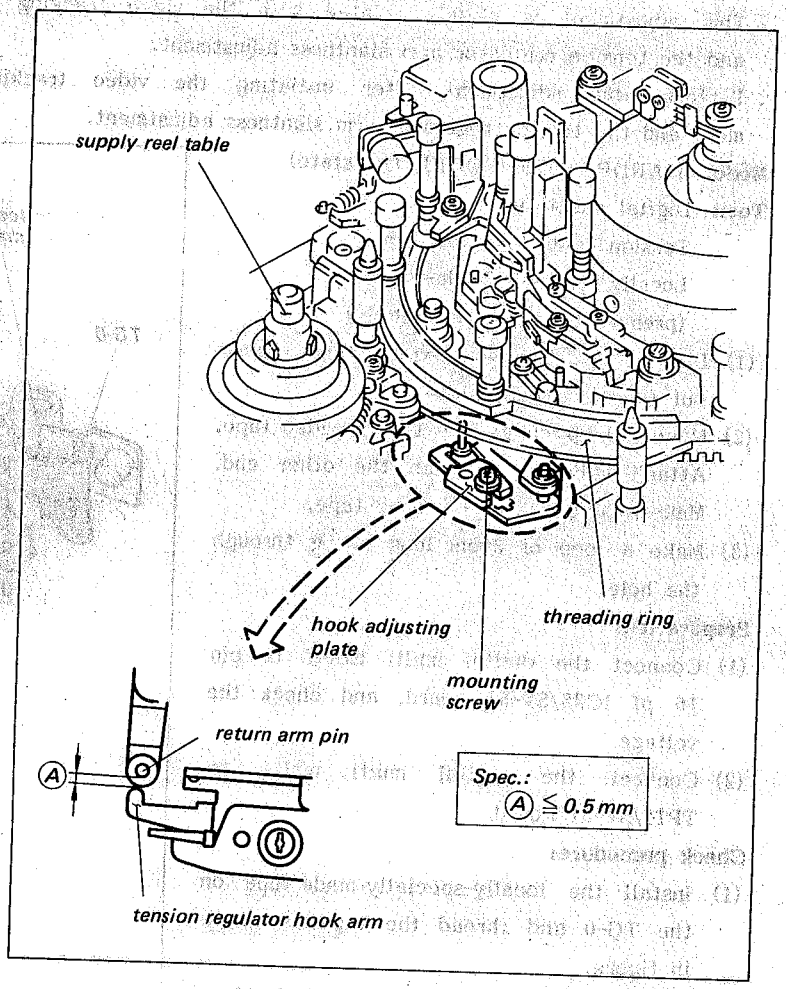

7-5-3. Hook Adjusting Plate Position Adjustment

Mode: Treading end

Check procedure:

(1) Check that the clearance between the TE arm and the hook adjusting plate meets the required specification.

Adjustment procedure:

(1) Loosen the mounting screw of the hook adjusting plate about 1/2 to 1 turn.

(2) Insert a flatblade screwdriver 3mm dia. into the adjusting hole. Adjust the position of the hook adjusting plate so that it meets the required specification.

(3) After adjustment, perform sec. 7-5-2, Tension Regulator Hook Arm Release Adjustment.

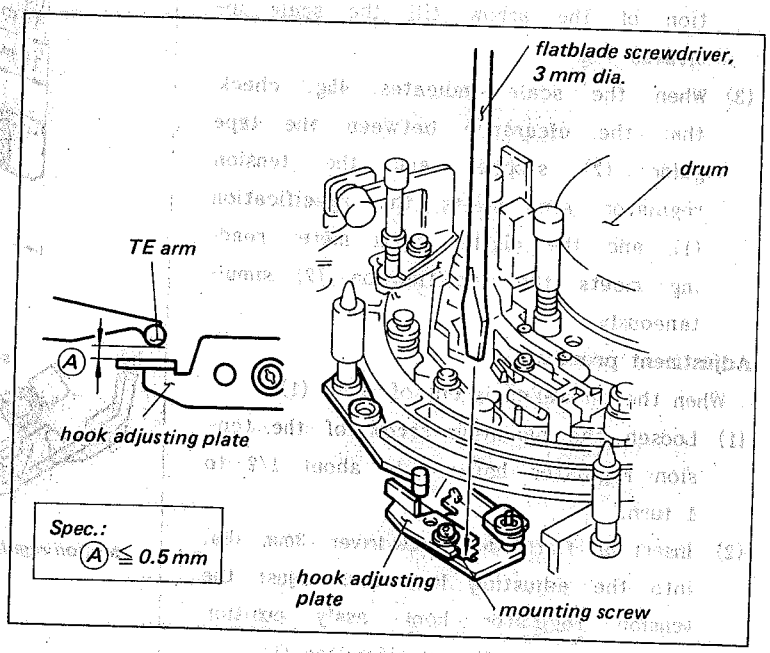

7-5-4. Tension Regulator Arm Position Adjustment

. This adjustment is closely related with the video tracking adjustment and the tension regulator arm slantness adjustment.

. Perform this adjustment after initiating the video tracking adjustment and the tension regulator arm slantness adjustment.

Mode: STANDBY OFF (POWER ON state)

Tool: Digital multi meter
Tension scale (50g full scale)
Locally-Specially-Made-Tape
(prepare this tape as follows)

(1) Prepare a 12cm long video tape. (Worm out tape is acceptable)

(2) Make a loop on an end of the video tape. Attach adhesive tape on the other end. Make a hole on the adhesive tape.

(3) Make a loop of 30cm long string through the hole.

Preparation:

(1) Connect the digital multi meter to pin 16 of IC36/SV-51 board, and check the voltage.

(2) Connect the digital multi meter to TP12/SV-51 board.

Check procedure:

(1) Install the locally-specially-made-tape on the TG-0 and thread the tape as shown in figure.

(2) Hook a tension scale on an end of a string. Move the scale in the direction of the arrow till the scale indicates 45g.

(3) When the scale indicates 45g, check that the clearance between the tape guide (2) stopper and the tension regulator arm meets the specification (1), and the digital multi meter reading meets the specification (2) simultaneously.

Adjustment procedure:

. When the clearance is out of spec. (1).

(1) Loosen the mounting screw of the tension regulator hook ass'y about 1/2 to 1 turn.

(2) Insert a flatblade screwdriver 3mm dia. into the adjusting hole and adjust the tension regulator hook ass'y position so that it meets the specification (1).

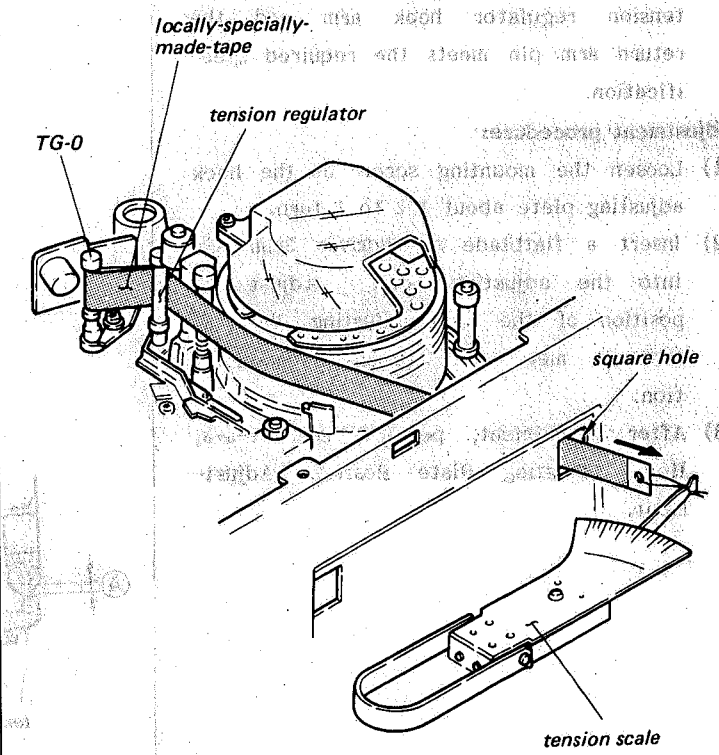

Locally-Specially-Made-Tape

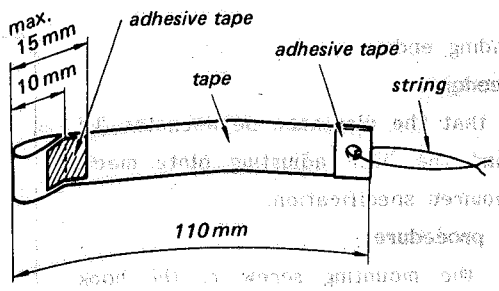

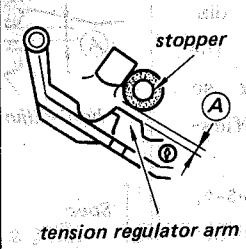

Spec. 1:
0.7mm ≦ Ⓐ ≦ 1mm

Spec. 2:
½B − 0.05 Volt ≦ C ≦ ½B + 0.05 Volt
• B is a voltage between IC36, pin 16/ SV-51 board and TPE.

(3) After tighten the mounting screw, check to meet the specification (1) again.

(4) Check to meet the specification (2).

. When the digital multi meter reading is out of spec. (2).

(5) Loosen the mounting screw of TR board.

(6) Adjust the position of the TR board so that it meets the specification (2).

(7) Tighten the mounting screw and check to meet the specification (2) again.

(8) After adjustment, perform the following adjustment.

Sec. 8-4, FWD Back Tension Adjustment

Sec. 8-5, REV Tension Adjustment

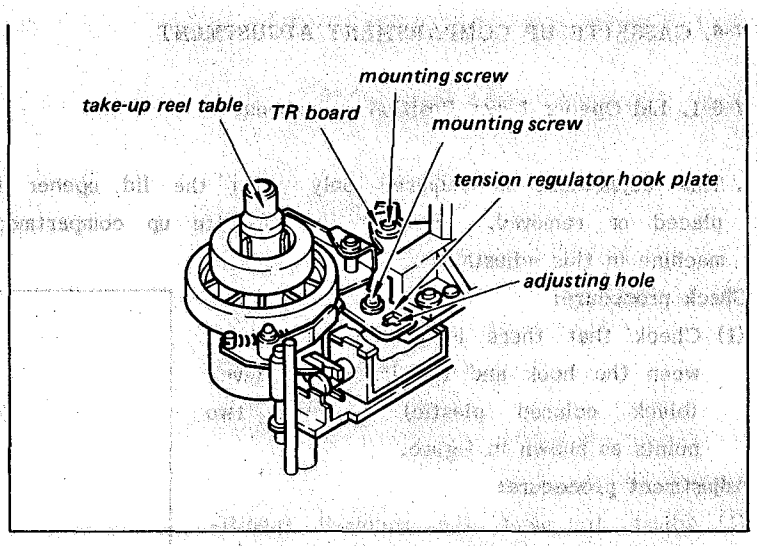

7-6. CASSETTE UP COMPARTMENT ADJUSTMENT

7-6-1. Lid Opener Lever Position Adjustment

. This adjustment is required only when the lid opener lever is replaced or removed. Remove the cassette up compartment from the machine in this adjustment.

Check procedure:

(1) Check that there is no clearance between the hook and the lid opener lever (black colored plastic) on the two points as shown in figure.

Adjustment procedure:

(1) Adjust to meet the required specification with adjusting screw.

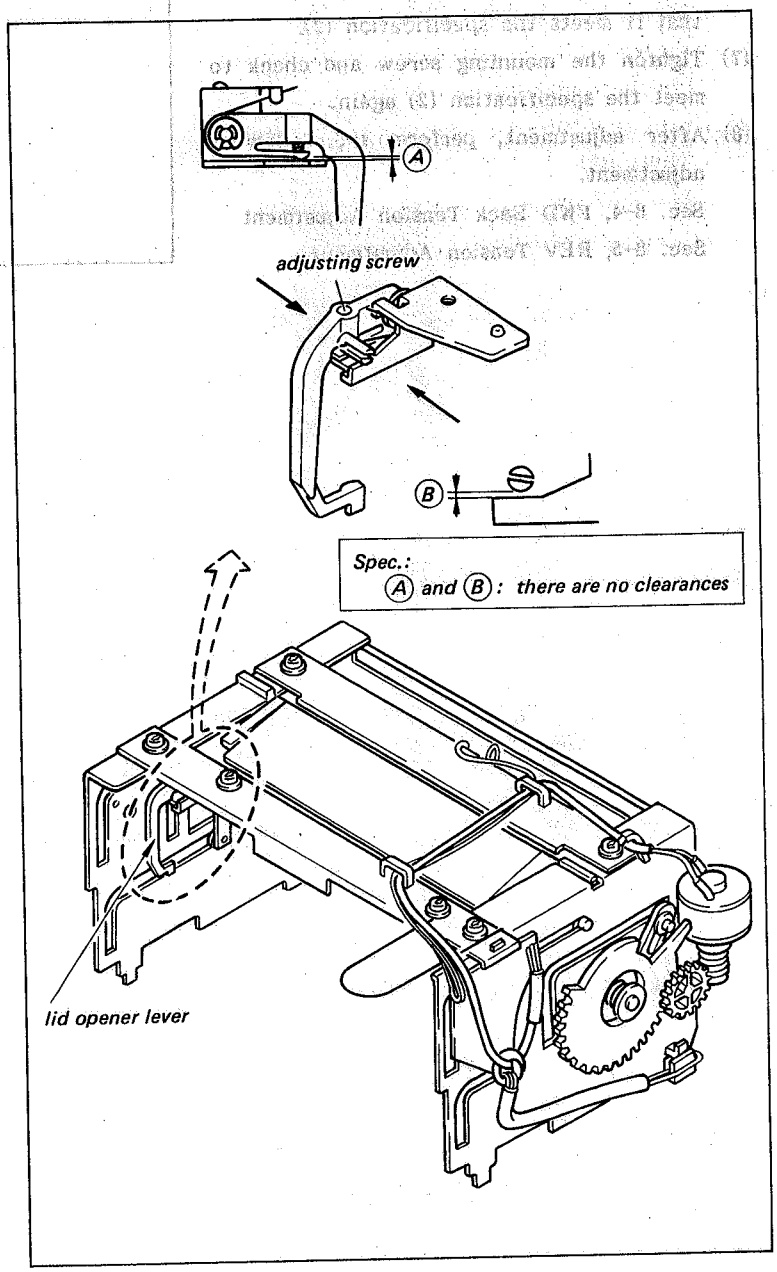

7-6-2. Lid Opener Lever Block Position Adjustment

. This adjustment is required only when the lid opener lever block is removed from the cassette up compartment. Remove the cassette up compartment from the machine in this adjustment.

Tool: Slide vernier caliper or equivalent

Check procedure:

(1) Place the cassette up compartment in the up state.

(2) Check that the positional relationship between the lid opener lever and the right side panel meets the required specification.

Adjustment procedure:

(1) Adjust the position of the lid opener lever block so that it meets the required specification.

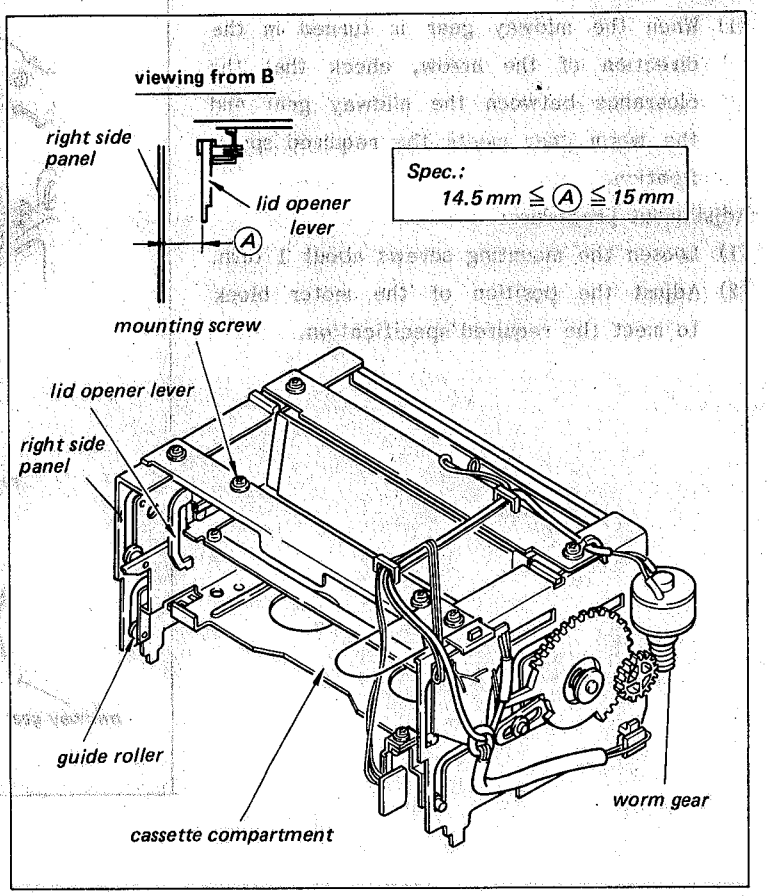

7-6-3. Motor Block Position Adjustment

. Remove the cassette up compartment from the machine in this adjustment.

Check procedure:

(1) When the midway gear is turned in the direction of the arrow, check that the clearance between the midway gear and the worm gear meets the required specification.

Adjustment procedure:

(1) Loosen the mounting screws about 1 turn.

(2) Adjust the position of the motor block to meet the required specification.

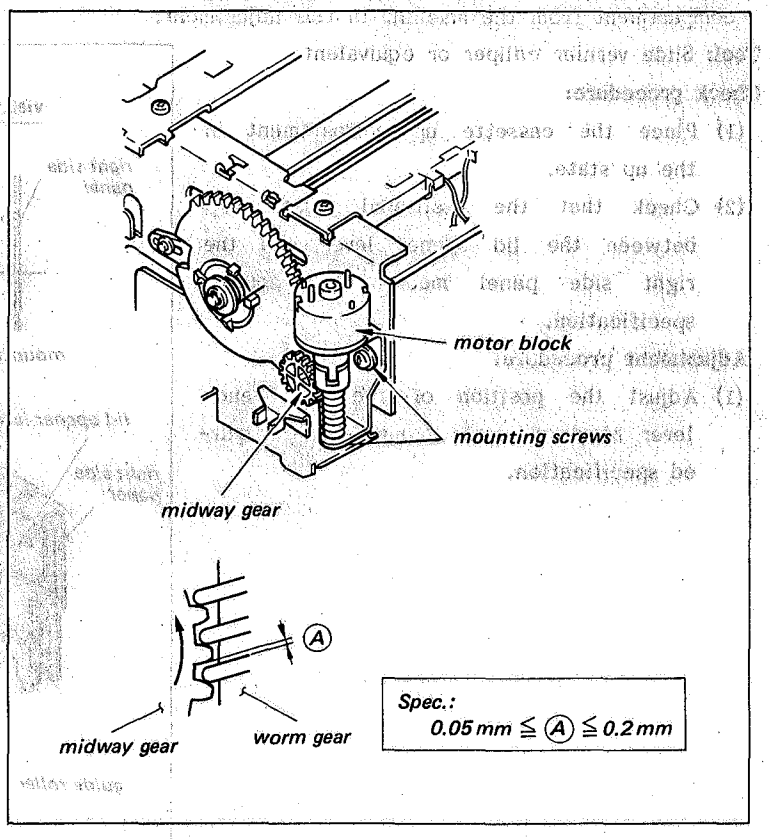

7-6-4. Cassette in Switch Position Adjustment

. Remove the cassette up compartment from the machine in this adjustment.

Tool: Slide vernier caliper or equivalent
Circuit tester

Prepatration:

(1) Remove the SY-91 board.
Extend it with the extension board.

(2) Connect the circuit tester to the connector CN2-12A/SY-91 board.

(3) Unsolder the jumper lead of the motor, A terminal from the CL-7 board.

(4) Connect the following terminals with jumper leads between CN1 on CL-7 board and harness connector for cassette up compartment.

harness connector		CN1/CL-7
5pin	←——→	5pin
6pin	←——→	6pin
7pin	←——→	7pin
8pin	←——→	8pin

(5) Turn the power on.

Check procedure:

(1) Turn the worm gear of the motor block in the cassette up state.

(2) Move the slider with finger into direction of the arrow as shown in figure. Check that the circuit tester indicates less than 1V to more than 4V when the clearance between the slider and the cassette compartment is 3.5mm to 4.5mm.

(3) Check that the clearance between the slider and the sensor meets the required specification. (Spec.(2))

(4) When the specifications (1) and (2) are met, perform the adjustment procedure step (2).

Adjustment procedure:

(1) Adjust the position of the cassette in switch block (PC-18 board) to meets the specifications (1) and (2).

(2) After adjustment, solder the jumper lead of the motor to the A terminal, CL-7 board.

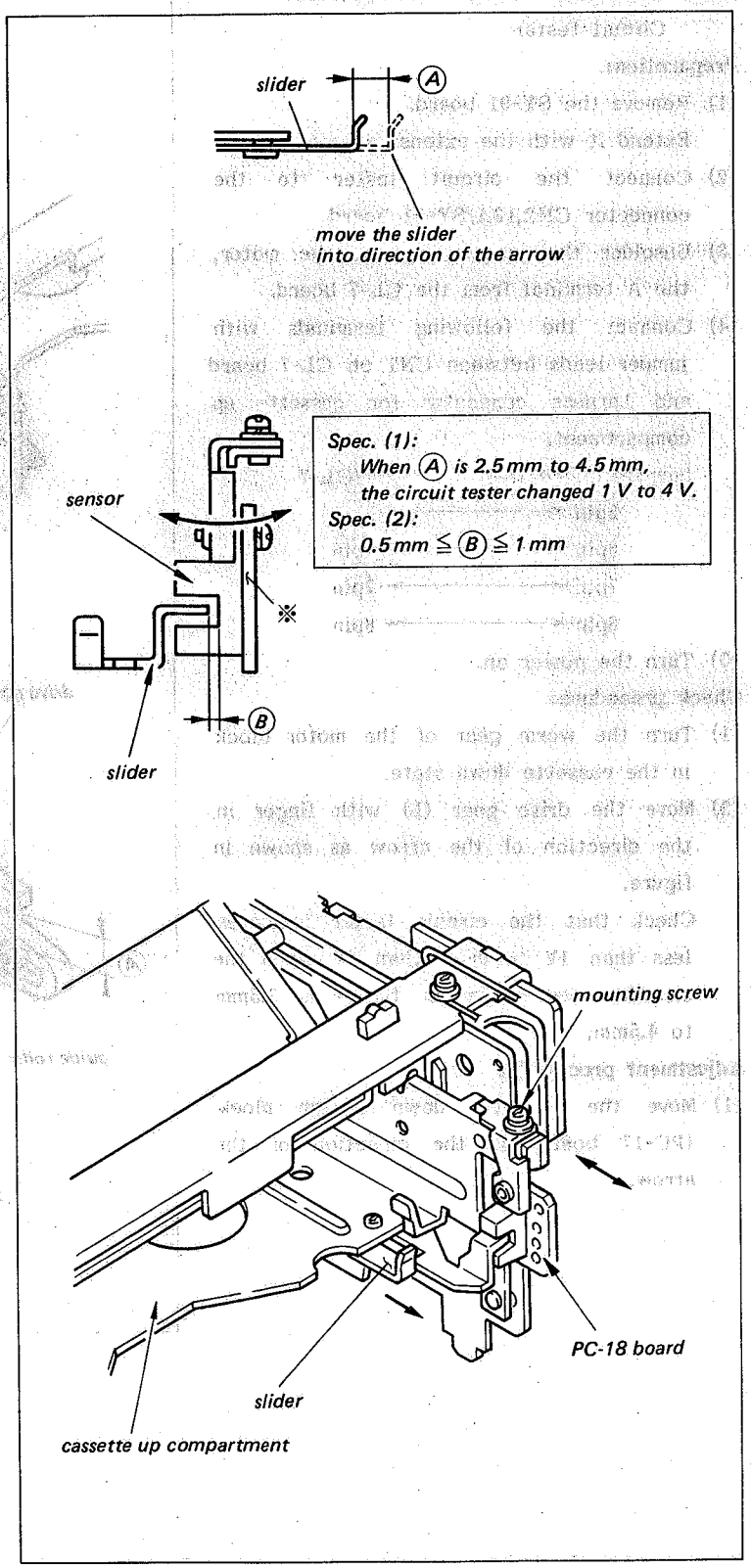

7-6-5. Cassette Down Switch Position Adjustment

. Remove the cassette up compartment from the machine in this adjustment.

Tool: Slide vernier caliper or equivalent
Circuit tester

Preparation:

(1) Remove the SY-91 board.
Extend it with the extension board.

(2) Connect the circuit tester to the connector CN2,13A/SY-91 board.

(3) Unsolder the jumper lead of the motor, the A terminal from the CL-7 board.

(4) Connect the following terminals with jumper leads between CN1 on CL-7 board and harness connector for cassette up compartment.

harness connectror		CN1/CL-7
5pin	←——→	5pin
6pin	←——→	6pin
7pin	←——→	7pin
8pin	←——→	8pin

(5) Turn the power on.

Check procedure:

(1) Turn the worm gear of the motor block in the cassette down state.

(2) Move the drive gear (L) with finger in the direction of the arrow as shown in figure.
Check that the circuit tester indicates less than 1V to more than 4V when the clearance as shown in figure is 3.5mm to 4.5mm.

Adjustment procedure:

(1) Move the cassette down switch block (PC-17 board) in the direction of the arrow.

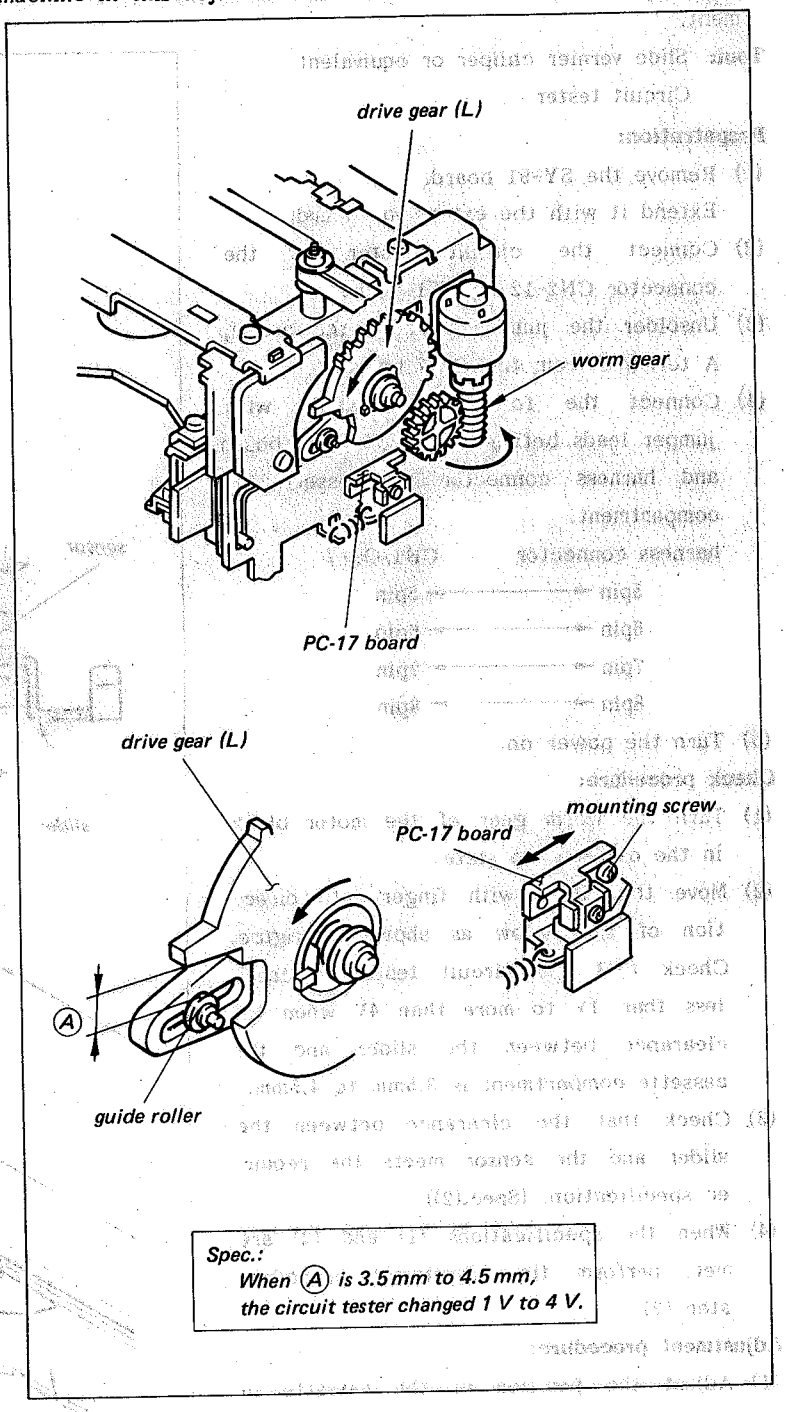

7-7. END SENSOR POSITION ADJUSTMENT

Mode: PLAY

Check procedure:

(1) Insert a cassette tape and put the machine into the PLAY mode.

(2) Check that the clearance between the tape end sensor and the tape meets the required specification.

(3) Check that the clearance between the tape beginning sensor and the tape meets the required specification as shown in figure.

Adjustment procedure:

. When the clearance of tape end sensor is out of spec.

(1) Bend the mounting plate with pliers as shown in figure.

. When the clearance of tape beginning sensor is out of spec.

(2) Loosen the mounting screw as shown in figure and adjust the position of the tape beginning sensor.

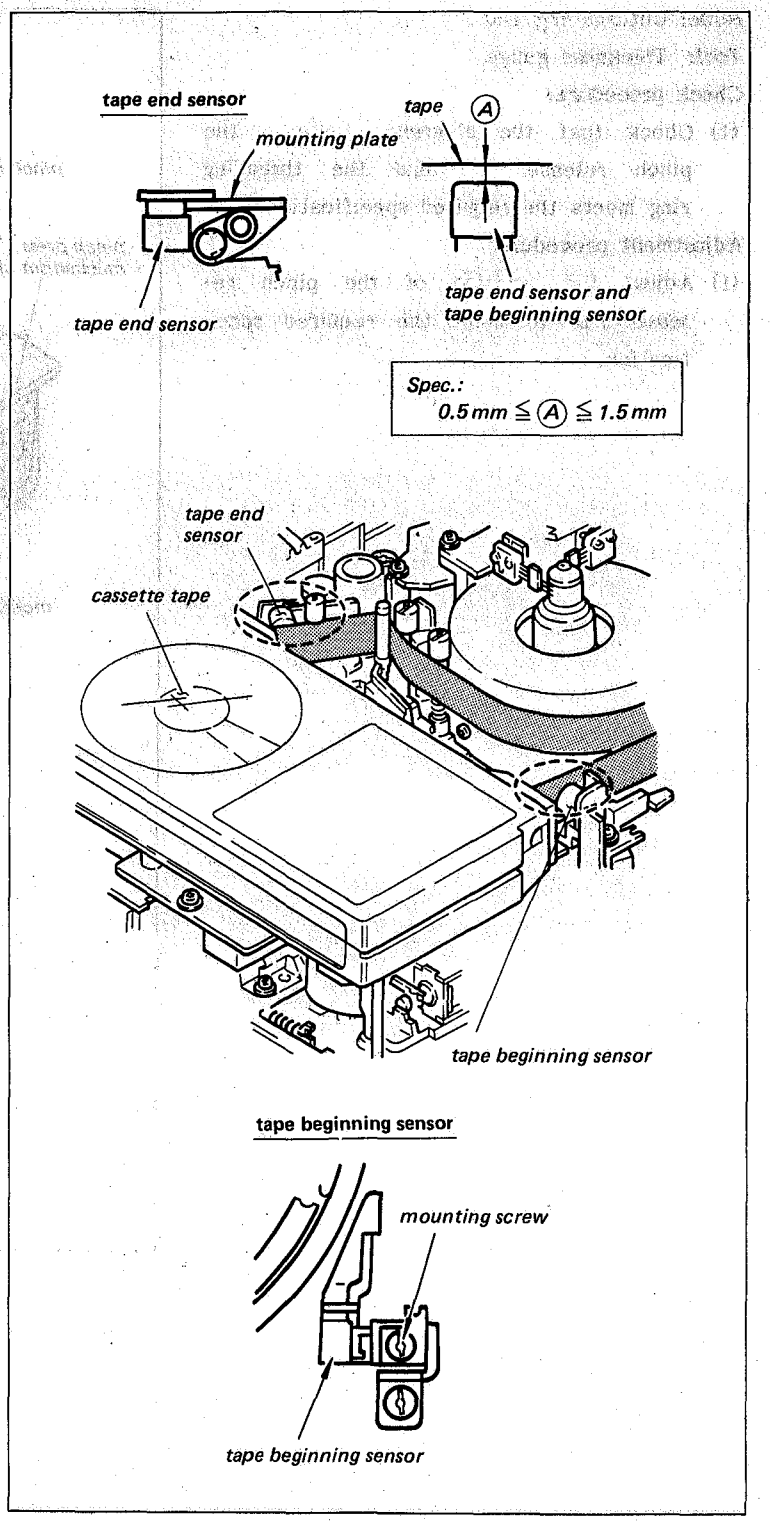

7-8. PINCH RELEASE ARM POSITION ADJUSTMENT

Mode: Unthreading end

Tool: Thickness gauge

Check procedure:

(1) Check that the clearance between the pinch release arm and the threading ring meets the required specification.

Adjustment procedure:

(1) Adjust the position of the pinch release arm to meet the required specification.

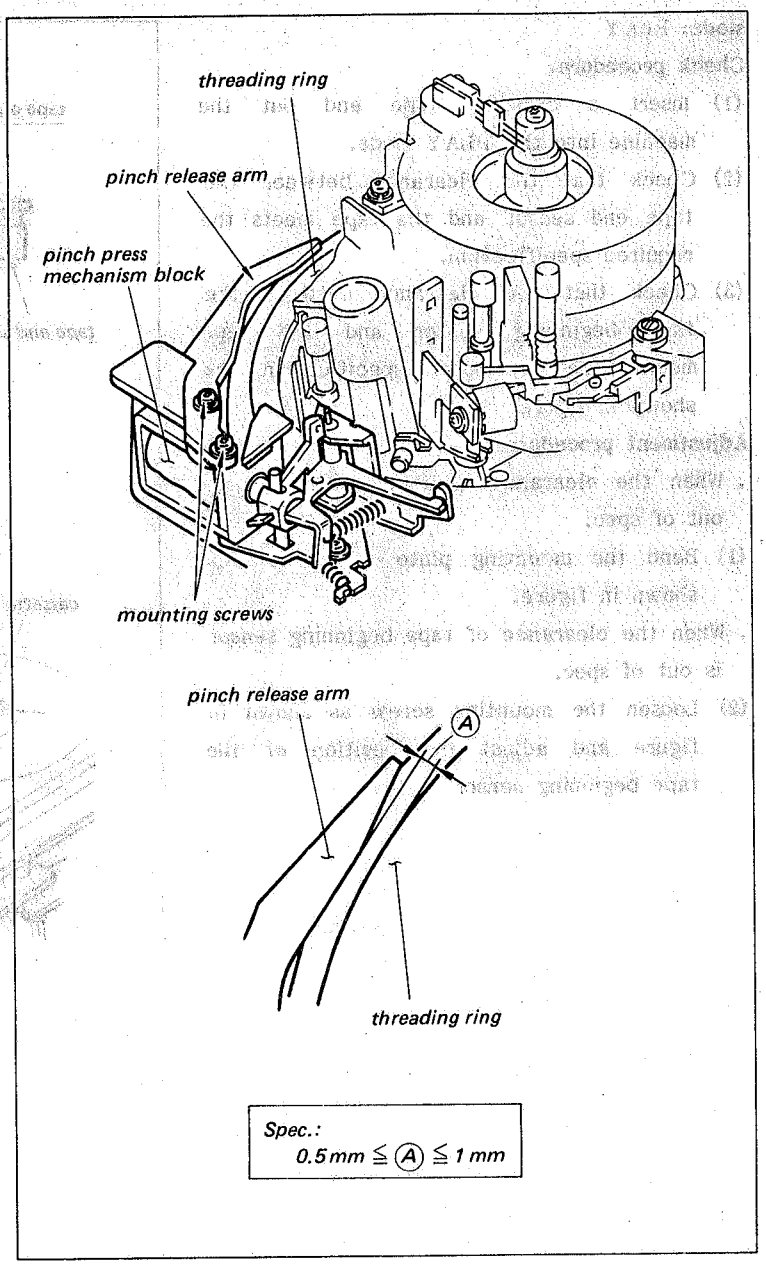

SECTION 8
TORQUE AND BACK TENSION ALIGNMENT

ALIGNMENT INFORMATION

MODE

. Unthreading end mode

It means EJECT completion mode.
The tension regulator arm and threading ring are put back at the cassette tape side completely.

. Threading mode

Press the PLAY button. Threading mode means that the threading ring is rotating in counterclockwise direction.

. Threading end mode

Press the PLAY button. The threading ring is rotating in counter-clockwise direction, and then the threading ring rotation is stopped. This state means the threading end mode.

. PLAY mode without cassette tape

Press the PLAY button. The threading ring is rotating in counter-clockwise direction, and the pinch roller is pressed against the capstan shaft after the threading ring rotation is stopped. This state means the PLAY mode without tape.

. STNADBY OFF mode without tape

(1) Put the machine into the PLAY mode without tape. (Refer to "PLAY mode without tape".)
(2) Press the STOP button. Then, the pinch roller is disengaged from the capstan shaft.
(3) Press the STANDBY button. Then, the machine put into the STANDBY OFF mode. (The drum rotation is stopped in the STANDBY OFF mode.)

. REV mode without tape

(1) Put the machine into the PLAY mode without tape. (Refer to "PLAY mode without tape".)
(2) Turn the SEARCH DIAL in counterclockwise direction. Then, the machine put into the REV mode.

HOW TO MAKE THE LOCALLY-SPECIALLY-MADE-TAPE

This tape is used for the FWD Back Tension and REV Back Tension adjustments. Prepare this tape as follows:

(1) Wind the L-500 cassette tape to the tape beginning portion.

(2) Remove the four screws on back of the cassette tape, and remove the upper half of the cassette.

(3) Remove the lock mechanism parts and the springs on the left and right.

(4) Remove the cassette lid from the upper half.

(5) Taken up the video tape on the take-up reel about 1 meter. Cut the video tape at the position as shown in figure. Remove the tade-up reel from the cassette.

(6) Attach an adhesive tape on an end of the tape at the supply side and make a hole on the adhesive tape.

(7) Make a loop of 6cm long string through the hole.

(8) Install the upper half on the lower half with four screws from the back side.

< locally-specially-made-tape >

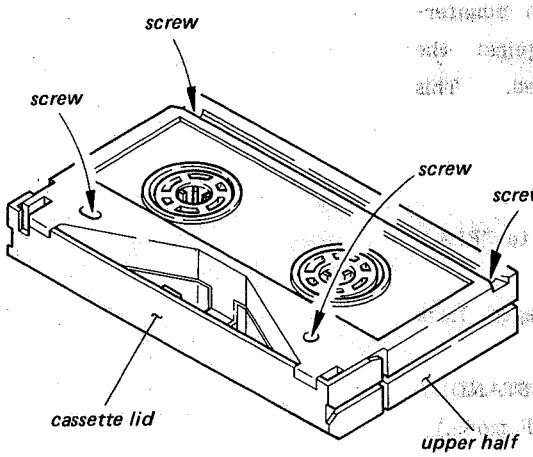

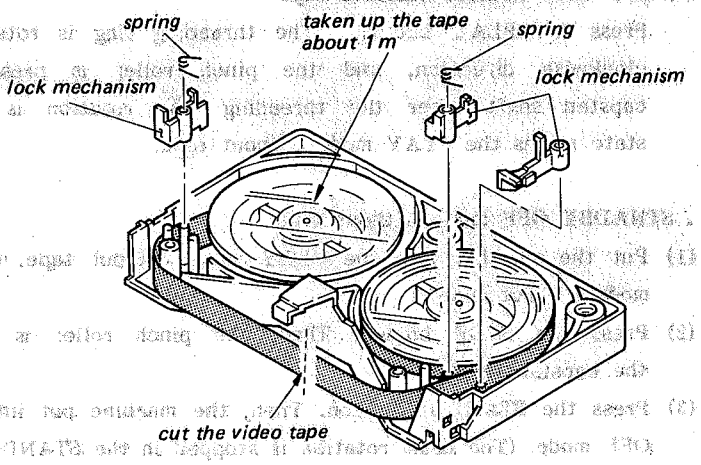

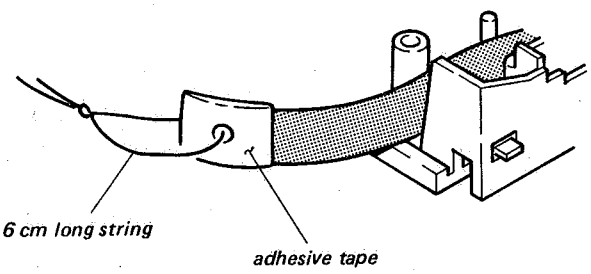

8-1. S SOFT BRAKE TORQUE ADJUSTMENT

Mode: Unthreading end (POWER on state)

Tool: Reel table tension gauge

Tension scale (20g full scale)

Preparation:

(1) Remove the left and right side ornamental panels.

(2) Remove the control panel.

Check procedure:

(1) Wind the string of the reel table tension gauge in the clockwise direction.

(2) Install the reel table tension gauge on the supply reel table, and hook a tension scale on an end of the string.

(3) Push the iron core of the S brake solenoid into the fully energized position. (Don't remove finger.)

(4) In the energized position, pull out the tension scale to the direction of the arrow and confirm that the scale reading is in the specification.

Adjustment procedure:

(1) Change the position of the spring on the S brake block so that it meets the required specification.

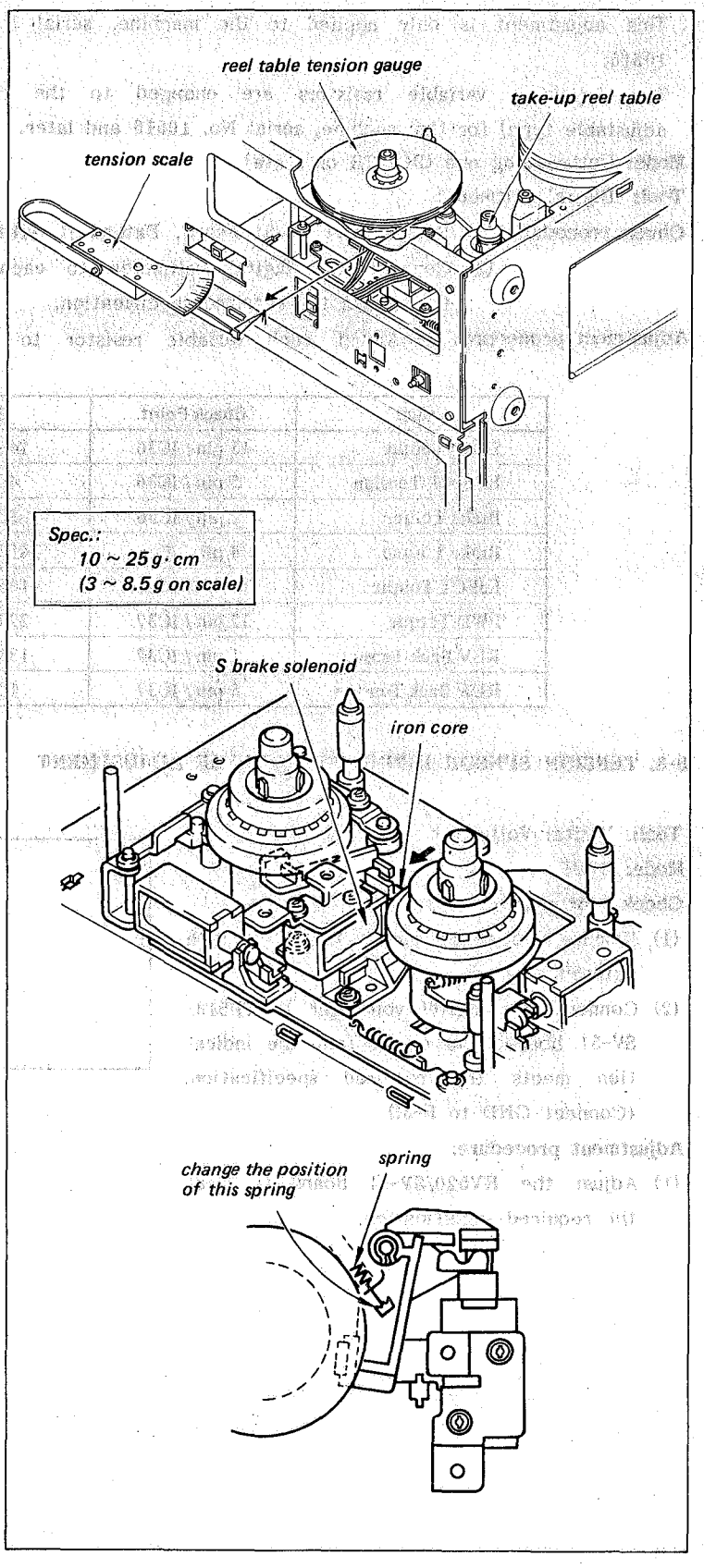

8-2. REEL MOTOR TORQUE ADJUSTMENT

. This adjustment is only applied to the machine, serial No. 10001 to 10515.

The following variable resistors are changed to the resistor (non adjustable type) for the machine, serial No. 10516 and later.

Mode: Unthreading end (POWER on state)

Tool: Digital voltmeter

Check procedure: (1) Remove the SV-51 board. Extend it with extension board.

(2) Connect the digital voltmeter to each terminals, and check that the indication meets the required specification.

Adjustment procedure: (1) Adjust each variable resistor to meet the required specification.

Item	Check Point	Spec.	Adjustment
STOP Torque	15 pin / IC36	146 ± 10 mV	RV509
FF Back Tension	5 pin / IC36	40 ± 3 mV	RV510
Brake Torque	2 pin / IC36	1080 ± 50 mV	RV511
Brake Torque	4 pin / IC37	−455 ± 20 mV	RV519
EJECT Torque	14 pin / IC37	135 ± 10 mV	RV513
FWD Torque	12 pin / IC37	223 ± 20 mV	RV515
REV Back Tension	1 pin / IC37	131 ± 10 mV	RV516
REW Back Tension	5 pin / IC37	10 ± 2 mV	RV517

8-3. TENSION SENSOR IMPRESSED VOLTAGE ADJUSTMENT

Tool: Digital Voltmeter

Mode: STOP

Check procedure:

(1) Remove the SV-51 board. Extend it with extension board.

(2) Connect the digital voltmeter to TP513/SV-51 board, and check that the indication meets the required specification. (Connect GND to E-3.)

Adjustment procedure:

(1) Adjust the RV520/SV-51 board to meet the required specification.

Spec.:
TP513/SV-51
9.0 ± 0.1 V

8-4. FWD BACK TENSION ADJUSTMENT

Mode: Threading end → PLAY

Tool: Locally-specially-made-tape (Refer to alignment information)
Tension scale (100g full scale)

Preparation:

(1) Remove the right side ornamental panel.

(2) Remove the handle on the chassis of the control panel side.

(3) Set the TROUBLE INHIBIT switch (S4-6) on the SY-91 board to ON state. (After completing this check and/or adjustment, be sure to set this switch to OFF state.)

(4) Remove the SV-51 board. Extend it with extension baord.

Check procedure:

(1) Put the machine into the threading end state. Install the locally-specially-made-tape.

(2) Thread the tape as shown in figure. Thread an end of the tape through the square hole of the side chassis as shown in figure.

(3) Hook the tension scale on an end of the tape.

(4) Put the machine into the PLAY mode.

(5) Pull out the tape at the constant speed of approx. 12cm/sec. in the direction of the arrow. Check that the scale reading meets the required specification.

(6) If the specification is met, perform the step (2) in the adjustment procedure.

Adjustment procedure:

(1) Adjust RV502 on the SV-51 board to meet the required specification.

(2) Set the TROUBLE INHIBIT switch (S4-6) on the SY-91 board to OFF state.

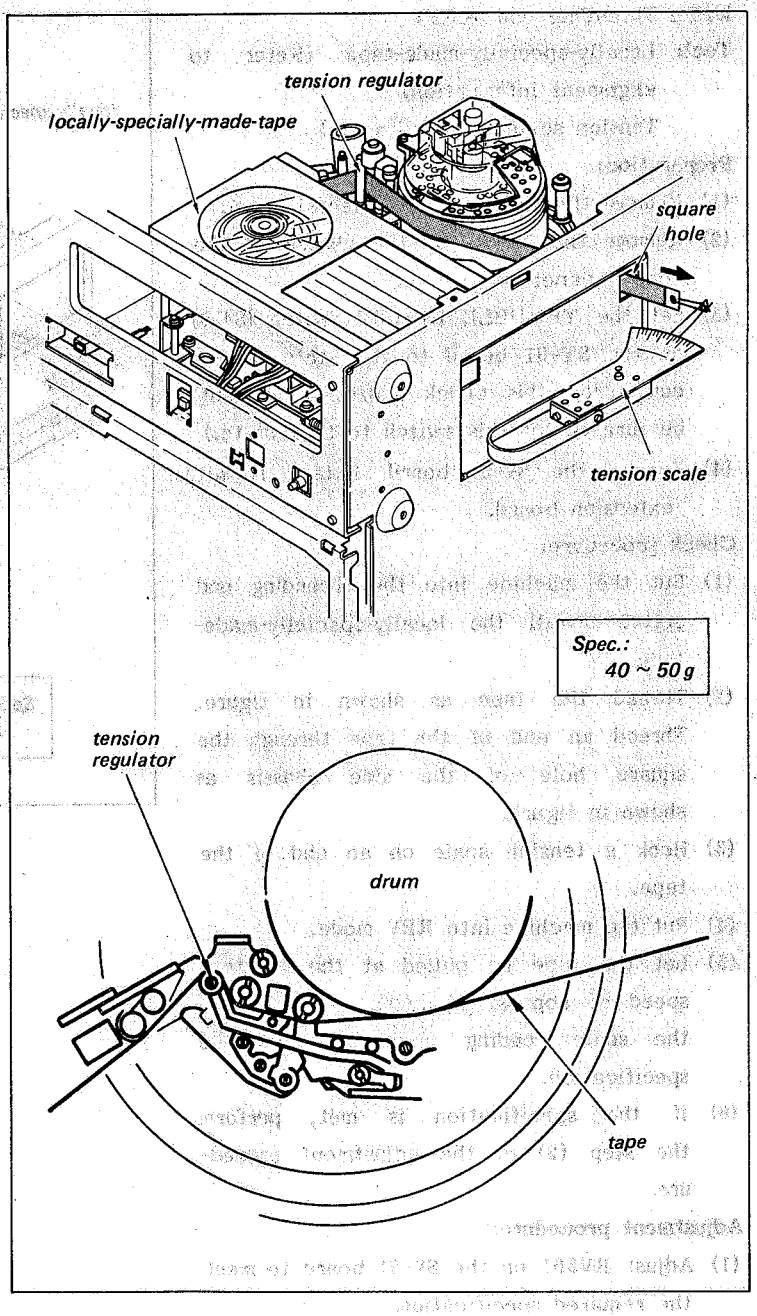

8-5. REV TENSION ADJUSTMENT

Mode: Threading end→REV

Tool: Locally-specially-made-tape (Refer to alignment information)
Tension scale (50g full scale)

Preparation:

(1) Remove the right side ornamental panel.

(2) Remove the handle on the chassis of the control panel side.

(3) Set the TROUBLE INHIBIT switch (S4-6) on the SY-91 board to ON state. (After completing this check and/or adjustment, be sure to set this switch to OFF state.)

(4) Remove the SV-51 board. Extend it with extension board.

Check procedure:

(1) Put the machine into the threading end state. Install the locally-specially-made-tape.

(2) Thread the tape as shown in figure. Thread an end of the tape through the square hole of the side chassis as shown in figure.

(3) Hook a tension scale on an end of the tape.

(4) Put the machine into REV mode.

(5) Let the tape be pulled at the constant speed of approx. 12cm/sec. Check that the scale reading meets the required specification.

(6) If the specification is met, perform the step (2) in the adjustment procedure.

Adjustment procedure:

(1) Adjust RV501 on the SV-51 board to meet the required specification.

(2) Set the TROUBLE INHIBIT switch (S4-6) on the SY-91 board to OFF state.

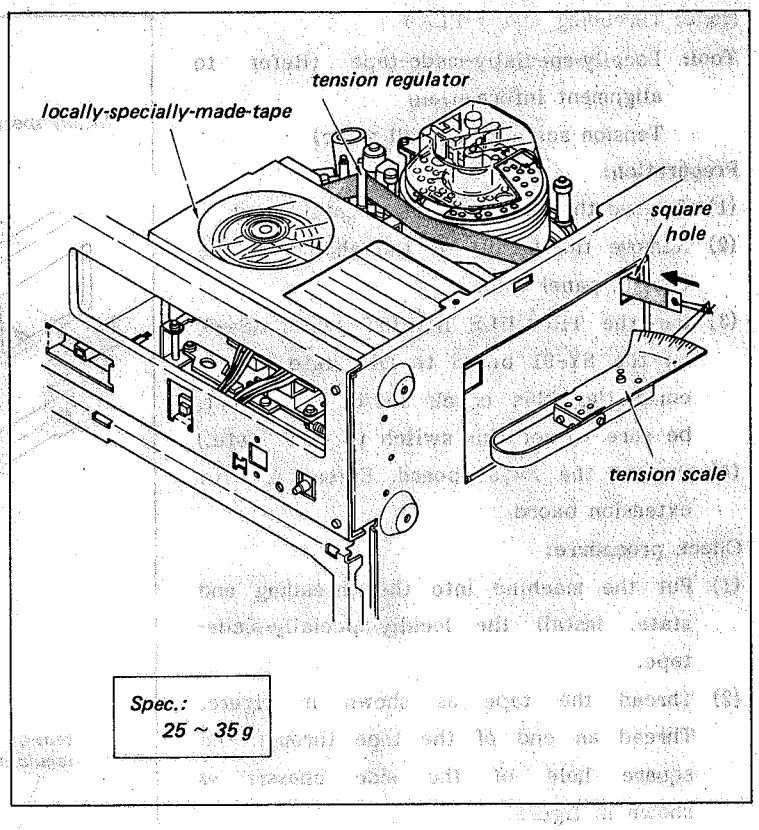

SECTION 9
TAPE RUN ALIGNMENT

LIGNMENT INFORMATION

LIGNMENT TAPE

. Alignment tape for tracking adjustment

CR2-1PS (8-960-098-02)

Contents	For use
Video, Y track : 4MHz signal (track width : 73μ) C track : 5MHz signal (track width : 73μ) Audio, blank TC, CTL signal	.Video tracking adjustment for player .CTL head position adjustment for player .TC head position adjustment for player .Switching position adjustment for player and recorder.

. Alignment tape for general adjustment

CR5-1PS (8-960-098-22)

Contents	For use
Video, color-bar signal TC, SMPTE time code signal	.Video, Audio, Servo and Time Code system adjustmens
Video, gated sweep signal Audio, 1kHz signal	.Video and Audio adjustments
Video, 2T pulse/2T bar signal Audio, 10kHz signal	.Video adjustment .Audio head position adjustment
Video, monoscope signal (switching position is shifted) Audio, 1kHz,7kHz,10kHz,15kHz signals	.Video head dihedral adjustment .Audio frequency response adjustment
Video, blank Audio, blank CTL, audio 0.8kHz signal	.CTL head height adjustment

MODE

. Unthreading end mode

It means EJECT completion mode.
The tension regulator arm and threading ring are put back at the cassette tape side completely.

. Threading mode

Press the PLAY button. Threading mode means that the threading ring is rotating in counterclockwise direction.

. Threading end mode

Press the PLAY button. The threading ring is rotating in counter-clockwise direction, and then the threading ring rotation is stopped. This state means the threading end mode.

. PLAY mode without cassette tape

Press the PLAY button. The threading ring is rotating in counter-clockwise direction, and the pinch roller is pressed against the capstan shaft after the threading ring rotation is stopped. This state means the PLAY mode without tape.

. STNADBY OFF mode without tape

(1) Put the machine into the PLAY mode without tape. (Refer to "PLAY mode without tape".)
(2) Press the STOP button. Then, the pinch roller is disengaged from the capstan shaft.
(3) Press the STANDBY button. Then, the machine put into the STANDBY OFF mode. (The drum rotation is stopped in the STANDBY OFF mode.)

. REV mode without tape

(1) Put the machine into the PLAY mode without tape. (Refer to "PLAY mode without tape".)
(2) Turn the SEARCH DIAL in counterclockwise direction. Then, the machine put into the REV mode.

HOW TO MAKE THE CASSETTE TAPE WITHOUT LID

Since the VTR is designed compact size, the check and adjustment can not be performed if cassette tape lid is installed.

The cassette tape lid removal procedures are as follows:

(1) Remove the four screws on the back of the cassette as shown in figure, and remove the upper half of the cassette.

(2) Remove the lock mechanism parts and the springs on the left and right.

(3) Remove the cassette lid from the upper half.

(4) Install the upper half on the lower half with four screws from the back side.

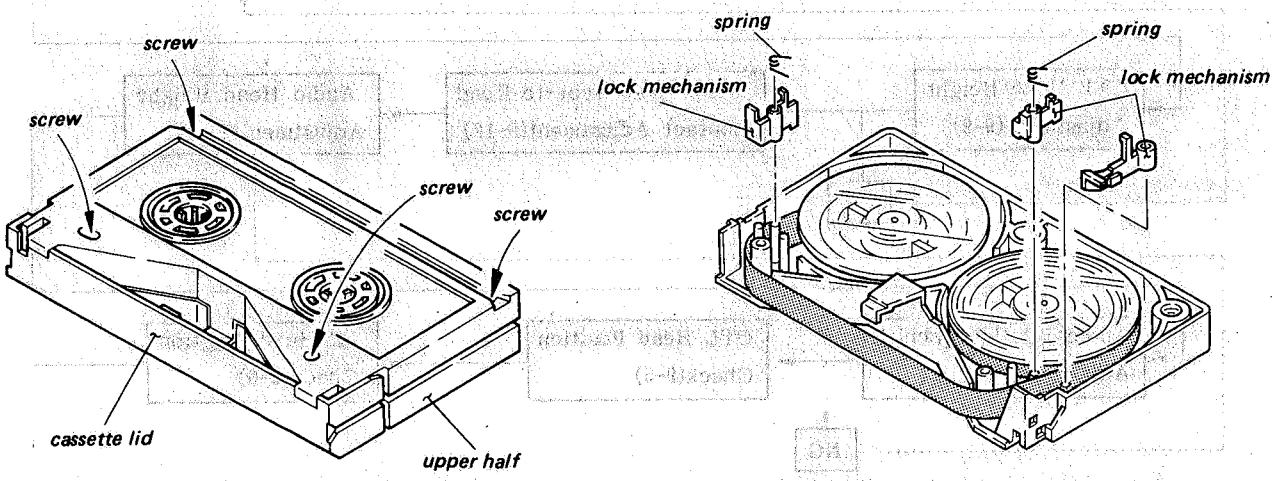

HOW TO MAKE THE ALIGNMENT TAPE WITHOUT LID

Since the VTR is designed compact size, the check and adjustment can not be performed if the alignment tape lid is installed.

Remove the lid of the alignment tape CR2-1PS for the tracking adjustment referring "How to make the cassette tape without lid".

ADJUSTMENT STEPS OF TRACKING ADJUSTMENT

. Perform the tracking adjustment of Video, Audio, CTL and Time Code Heads as follows.

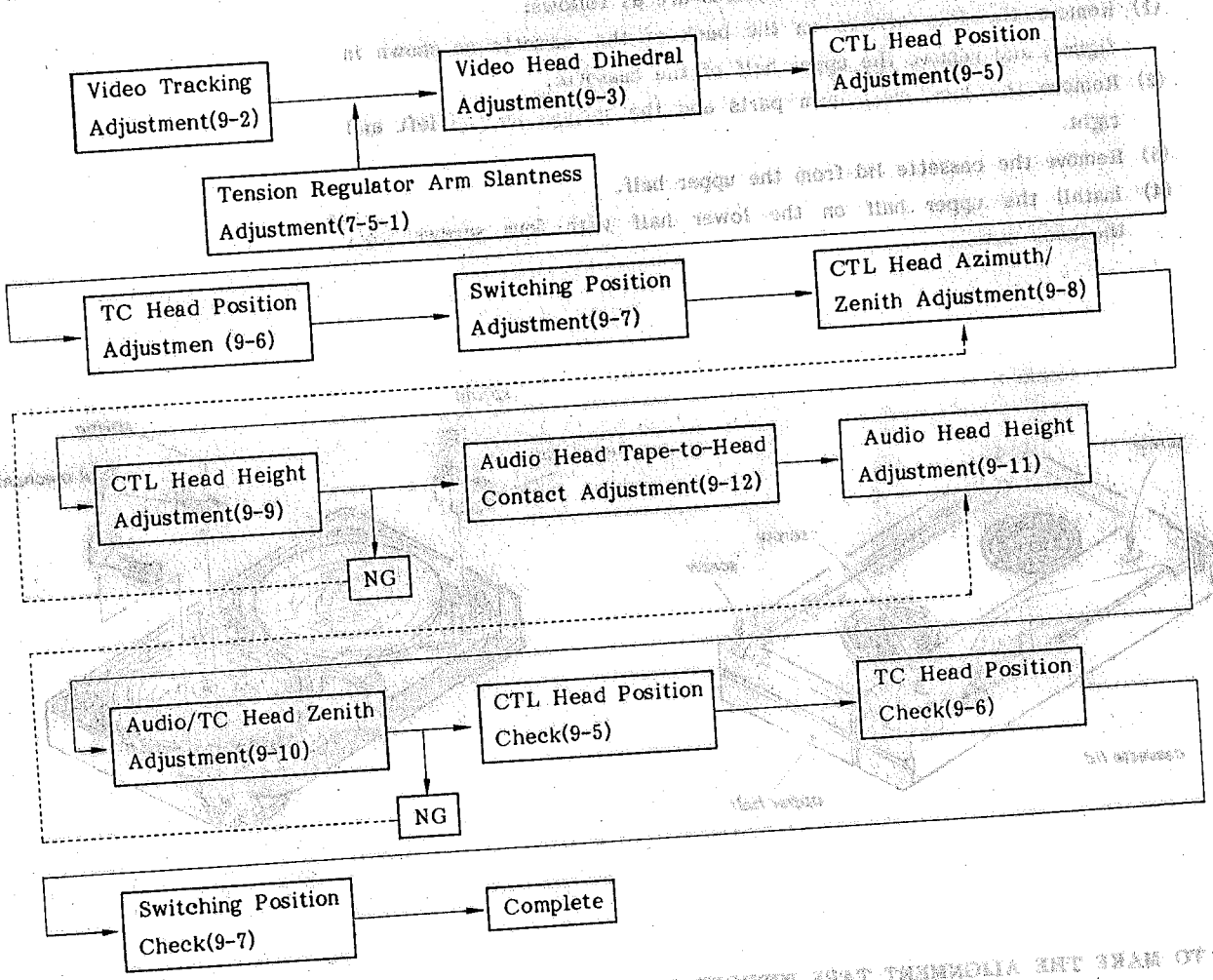

9-1. TAPE RUN ADJUSTMENT

Mode: Playback

Tool: Cassette tape without lid (Never use the alignment tape)

Check procedure:

(1) Insert a cassette tape and put the machine into the playback mode.

(2) Check that the positional relationship between the tape and the tape guide at the take-up side of the cassette tape is as shown in figure. (Spec.(1))

(3) Check that the tape tension is exactly equal at the tape top and tape bottom around the roller guide on the threading ring as shown in figure. (Spec.(2)).

Adjustment procedure:

(1) Adjust the height of the guide (A) on the threading ring to meet the required specification (1).

(2) Bend the T tape guide shaft in the direction of the arrow to meet the required specification (2).

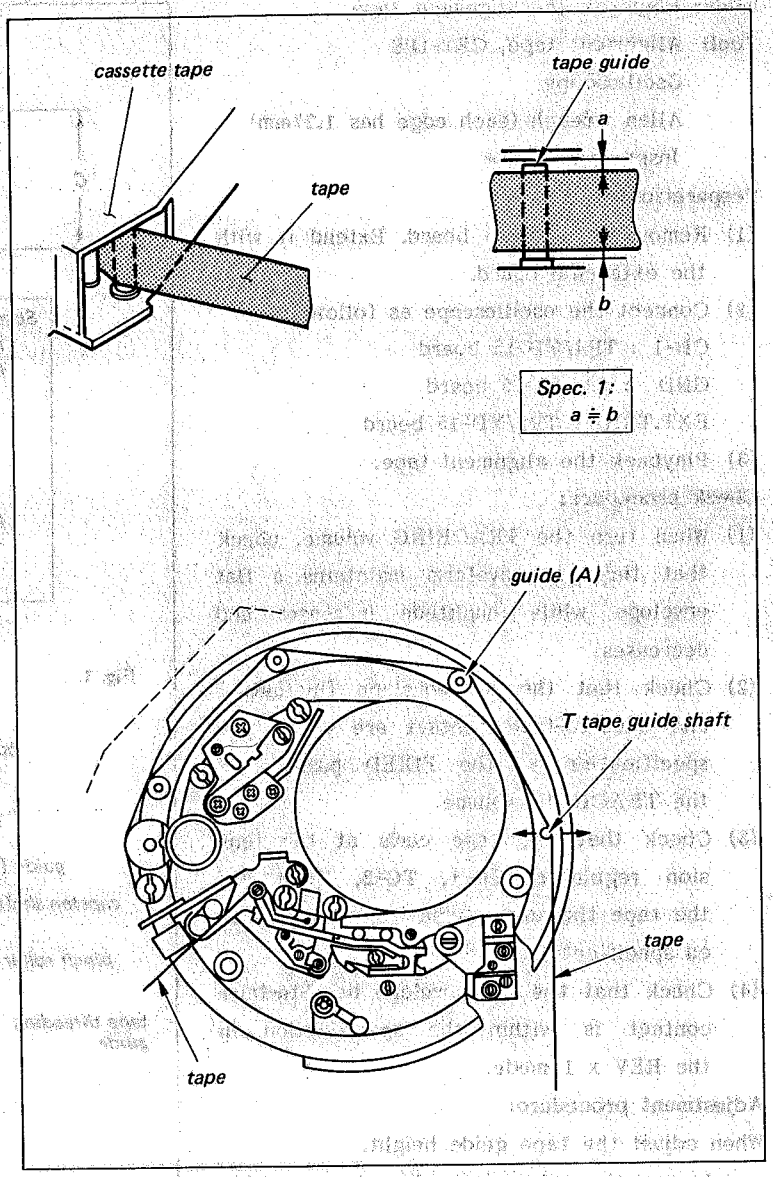

9-2. VIDEO TRACKING ADJUSTMENT

Mode: Playback the alignment tape

Tool: Alignment tape, CR2-1PS
Oscilloscope
Allen wrench (each edge has 1.27mm)
Inspection mirror

Preparation:

(1) Remove the YD-15 board. Extend it with the extension board.

(2) Connect the oscilloscope as follows:
CH-1 : TP4/YD-15 board
GND : E1/YD-15 board
EXT.TRIG : TP2/YD-15 board

(3) Playback the alignment tape.

Check procedure:

(1) When turn the TRACKING volume, check that the RF waveform maintains a flat envelope while amplitude increases and decreases.

(2) Check that the RF envelope fluctuation and head-to-tape contact are within the specification at the FIXED position of the TRACKING volume.

(3) Check that the tape curls at the tension regulator, TG-1, TG-2, TG-3 and the tape threading guide meet the required specification.

(4) Check that the RF envelope head-to-tape contact is within the specification in the REV x 1 mode.

Adjustment procedure:

When adjust the tape guide height.

. Loosen the set screws of each tape guide and adjust with adjusting nut.

When the tracking at the drum entrance side is no good.

(1) Turn the adjusting nuts of TG-1 and TG-2, and make clearances at (a), (b), of TG-1 and (a) of TG-2 as shown in figure 2.

(2) Turn the adjusting nut of the tension regualtor so that the RF envelope waveform changes from (i) state to (ii) state as shown in figure 3. Check that the tape runs in contact with the guide flange at the (a) portion of the tension

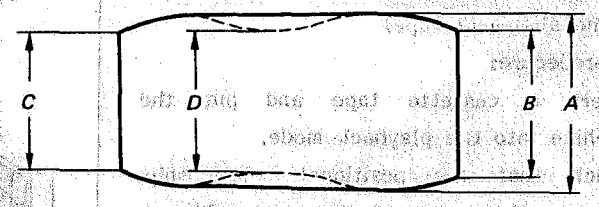

Spec.:
• FWD mode
head-to-tape contact
$\frac{C}{A} \geqq 0.8$
$\frac{B}{A} \geqq 0.8$
fluctuation
$\frac{D}{A} \geqq 0.9$

• REV mode
head-to-tape contact
$\frac{C}{A} \geqq 0.6$
$\frac{B}{A} \geqq 0.6$

Fig. 1.

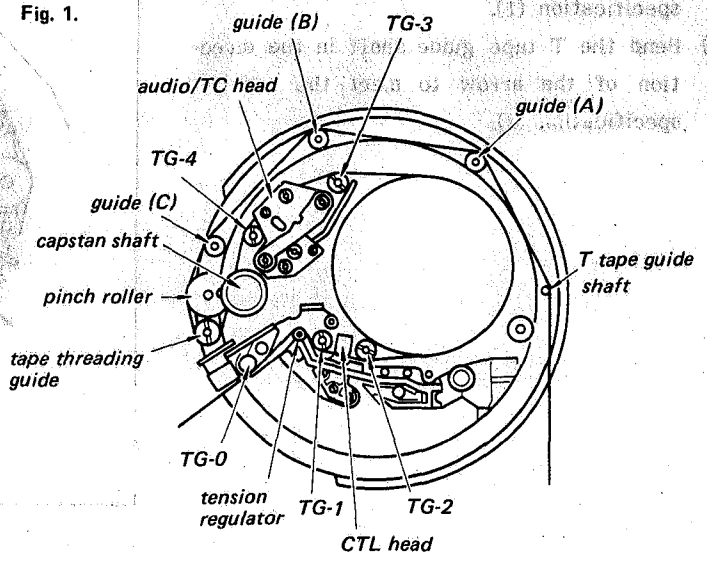

Fig. 2.

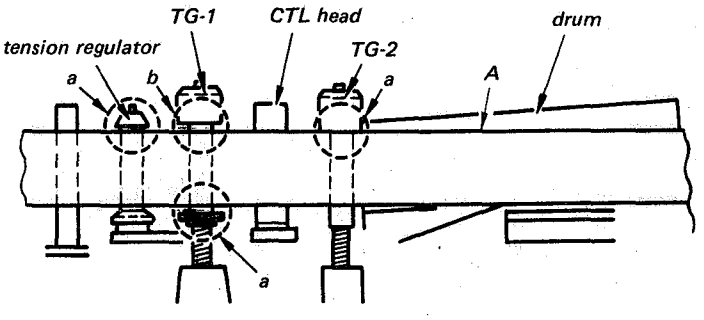

regulator. If not, turn the adjusting screw (a) of tension regulator in counter-clockwise direction as shown in figure 4.

(3) Turn the adjusting nut of TG-2 so that the tape runs in contact with the guide flange at the (a) portion of TG-2 and the RF envelope waveform flatten. Check that the tape is not in contact with the guide flange at the (b) portion of TG-1. The tape curl at the (a) portion of tension regulator and/or (a) portion of TG-2 is acceptable within the range as shown in figure 5. But tape curl at the drum is not acceptable.

(4) Turn the TRACKING volume in FIXED position. Put the machine into REV x 1 mode.

(5) Check that the RF envelope waveform is small at the drum entrance side as shown in figure 6.

(6) Put the machine into FWD mode. Turn the adjusting nut of TG-1 so that the tape runs in contact with the guide flange at the (a) portion. The tape curl at (a) portion is acceptable within the range as shown in figure 5.

(7) Put the machine into REV x 1 mode. Check that the RF envelope waveform is flat and the tape-to-head contact meets the required specification. If the RF envelope waveform is not able to flat, turn the adjusting screw (b) of the tension regulator in clockwise direction as shown in figure 4. If the adjusting screw (b) turns in this step, perform step (1) and later.

(8) Put the machine into FWD mode. Check that the tape-to-head contact meets the required specification.

(9) Tighten the set screws of each tape guide, and check again.

. When the tracking at the drum exit side is no good.

(1) Turn the adjusting nuts of TG-3 and TG-4, and make clearances at the (a) of TG-3, (b) of TG-4 and (a) and (b) of the tape threading guide as shown in figure 7.

Fig. 3.

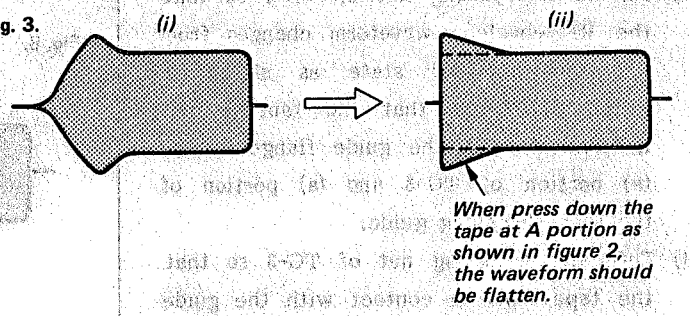

Fig. 4.

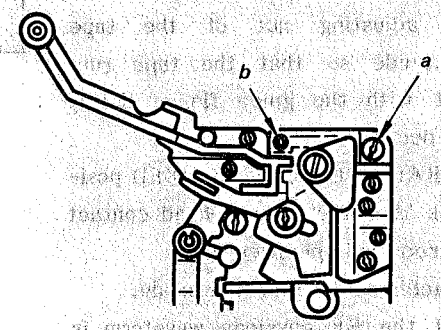

Fig. 5.

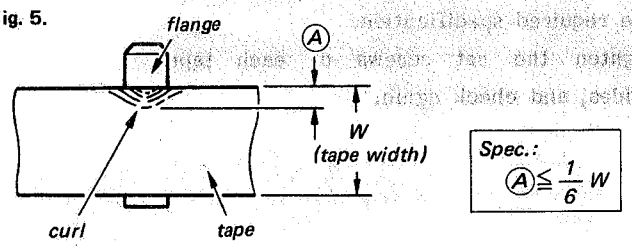

Fig. 6.

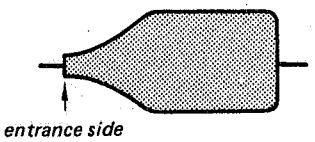

Fig. 7.

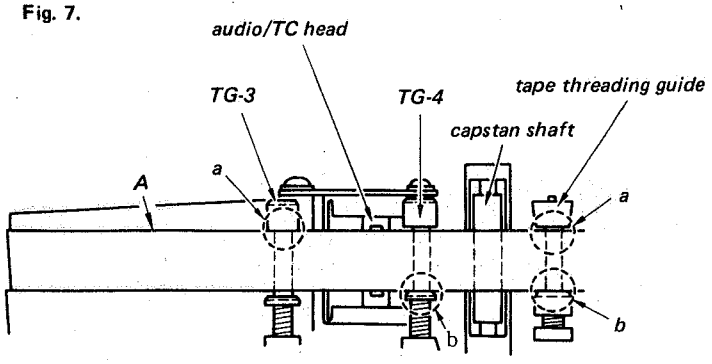

(2) Turn the adjusting nut of TG-4 so that the RF envelope waveform changes from (i) state to (ii) state as shown in figure 8. Check that the tape is not in contact with the guide flange at the (a) portion of TG-3 and (a) portion of the tape threading guide.

(3) Turn the adjusting nut of TG-3 so that the tape runs in contact with the guide flange at the (a) portion of TG-3 and the RF envelope waveform flattens.

(4) Turn the adjusting nut of the tape threading guide so that the tape runs in contact with the guide flange lightly at the (a) portion.

(5) Turn the TRACKING volume in FIXED position. Check that the tape-to-head contact meets the required specification.

(6) Put the machine into REV x 1 mode.

(7) Check that the RF envelope waveform is flat and the tape-to-head contact meets the required specification.

(8) Tighten the set screws of each tape guides, and check again.

Fig. 8.

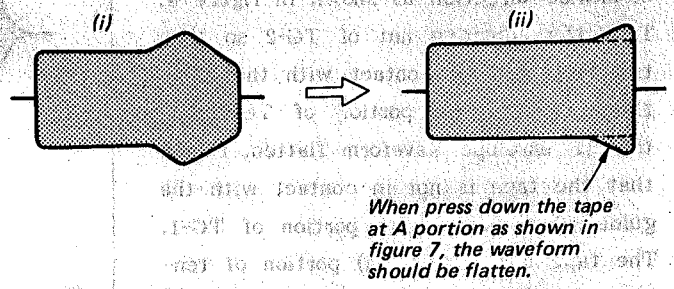

9-3. VIDEO HEAD DIHEDRAL ADJUSTMENT

. This adjustment is performed only for the Y head.
. The reference head is CH-A.

Mode: Playback the alignment tape

Tool: Alignment tape, CR5-1PS
Monitor TV
Dihedral adjusting screw (four pieces)
Oscilloscope

Preparation:

(1) Connect the oscilloscope to TP7/YD-15 board and E1/YD-15 board. Connect the monitor TV to CH-1 OUT terminal of the oscilloscope.

(2) Insert the alignment tape, and playback the monoscope signal (for dihedral adjustment) of the alignment tape.

Check procedure:

(1) Check the vertical line beneath the switching point visually on a monitor. If the vertical line does not split into two lines, no adjustment is necessary.

Adjustment procedure:

(1) Screw lightly four dihedral adjusting screws into the upper drum.

(2) Turn the adjusting screw adjacent to the Y head with red/yellow leads until some resistance is felt.

(3) If this screw is turned further, the video head is moved and the dihedral is adjusted. Therefore, turn this screw an additional quarter turn.

(4) Check for dihedral distortion. If the distortion has gotton worse, turn this screw back one turn and tighten the other screw (red/orange leads side) a quarter turn. Check again for dihedral distortion and continue in this way until dihedral error is eliminated.

(5) When the adjustment is completed, remove the four dihedral adjusting screws. After removel, playback the alignment tape and check dihedral again as error sometimes reappears after screws are removed.

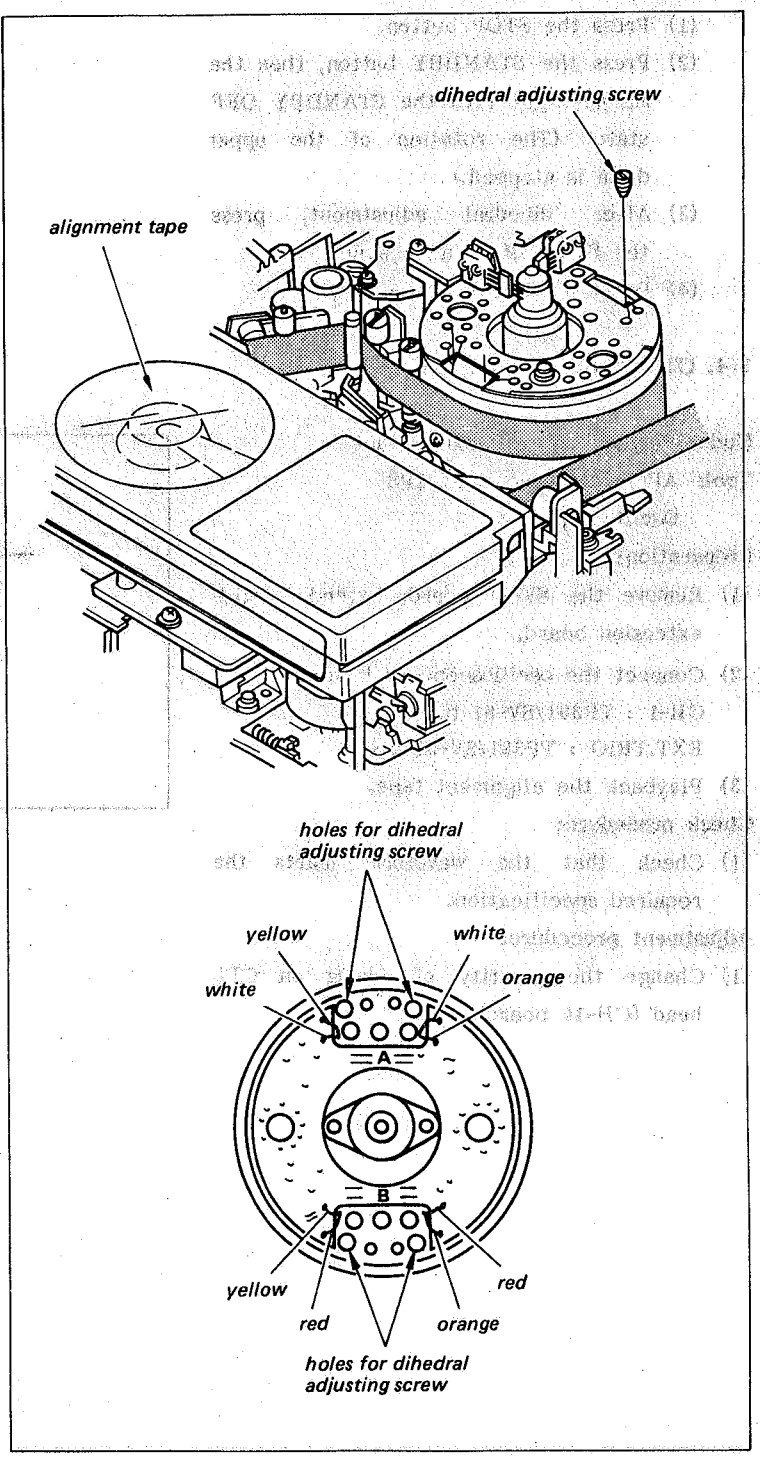

(NOTE)

Be sure to stop the rotation of the upper drum in the dihedral adjustment. Perform the following steps.

(1) Press the STOP button.

(2) Press the STANDBY button, then the machine put into the STANDBY OFF state. (The rotation of the upper drum is stopped.)

(3) After dihedral adjustment, press the STANDBY button again.

(4) Press the PLAY button.

9-4. CTL POLARITY CHECK

Mode: Playback the alignment tape

Tool: Alignment tape, CR2-1PS
Oscilloscope

Preparation:

(1) Remove the SV-51 board. Extend it with extension board.

(2) Connect the oscilloscope as follows:
CH-1 : TP301/SV-51 board
EXT.TRIG : TP301/SV-51 board

(3) Playback the alignment tape.

Check procedure:

(1) Check that the waveform meets the required specification.

Adjustment procedure:

(1) Change the polarity of wiring on CTL head (CH-10 board).

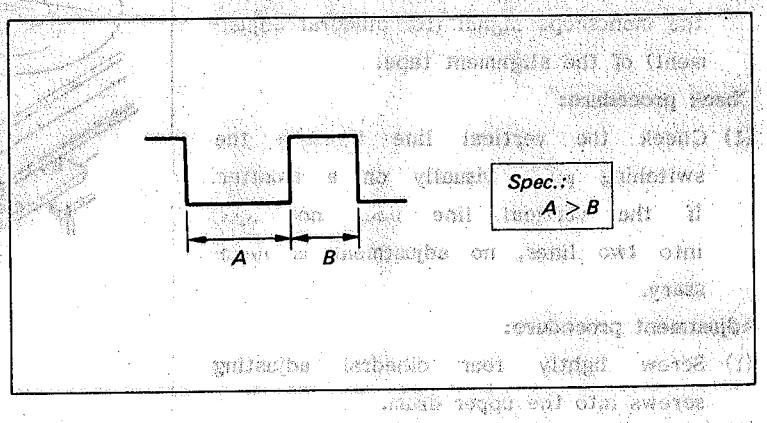

9-5. CTL HEAD POSITION ADJUSTMENT

Mode: Playback the alignment tape

Tool: Alignment tape, CR2-1PS
Oscilloscope

Preparation:

(1) Remove the YD-15 board. Extend it with extension board.

(2) Connect the oscilloscope as follows:
CH-1 : TP4/YD-15 board
GND : E1/YD-15 board
EXT.TRIG : TP2/YD-15 board

(3) Playback the alignment tape.

Check procedure:

(1) Check that the RF waveform has the maximum amplitude when the TRACKING volume is set in the detent position.

Adjustment procedure:

(1) Loosen the fixing screws 1/4 to 1/2 turn.

(2) Insert a flatblade screwdriver, 3mm dia. into the hole of CTL head base. Adjust the position of CTL head block to meet the required specification.

(3) After adjustment, perform Sec. 9-6. TC Head Position Adjustment.

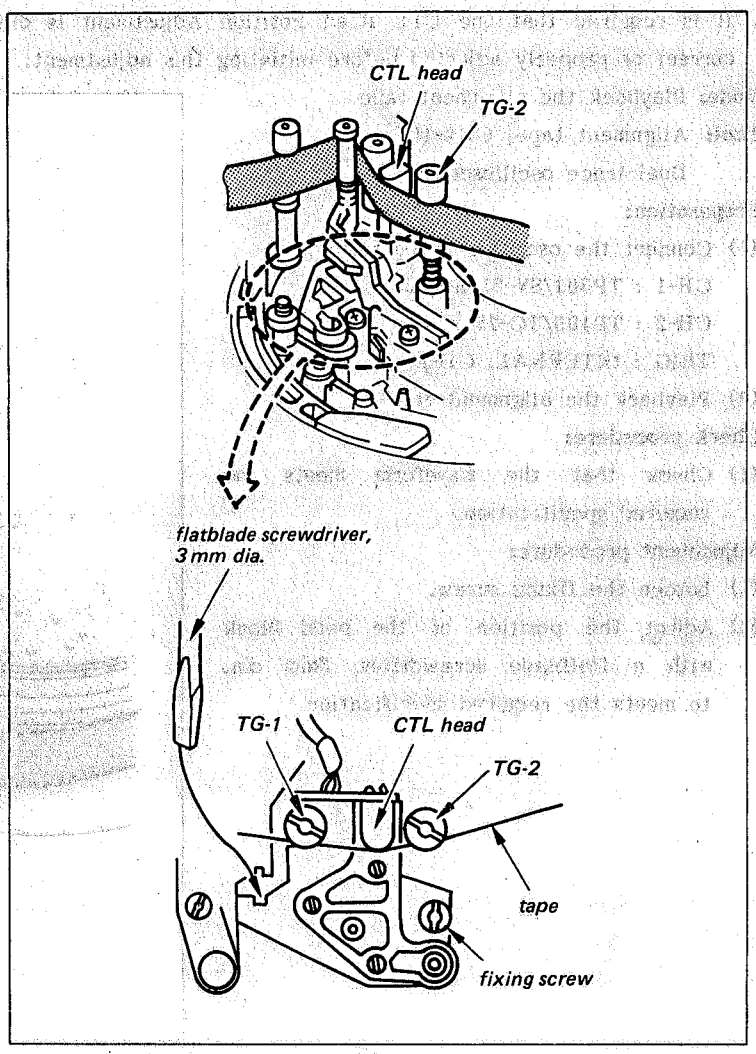

9-6. TC HEAD POSITION ADJUSTMENT

. It is required that the CTL Head Position Adjustment is checked to be correct or properly adjusted before initiating this adjustment.

Mode: Playback the alignment tape

Tool: Alignment tape, CR2-1PS
Dual trace oscilloscope

Preparation:

(1) Connect the oscilloscope as follows:
CH-1 : TP301/SV-51 board
CH-2 : TP100/TC-25 board
TRIG : INTERNAL, CH-1

(2) Playback the alignment tape.

Check procedure:

(1) Check that the waveform meets the required specification.

Adjustment procedure:

(1) Loosen the fixing screw.

(2) Adjust the position of the head block with a flatblade screwdriver, 3mm dia. to meets the required specification.

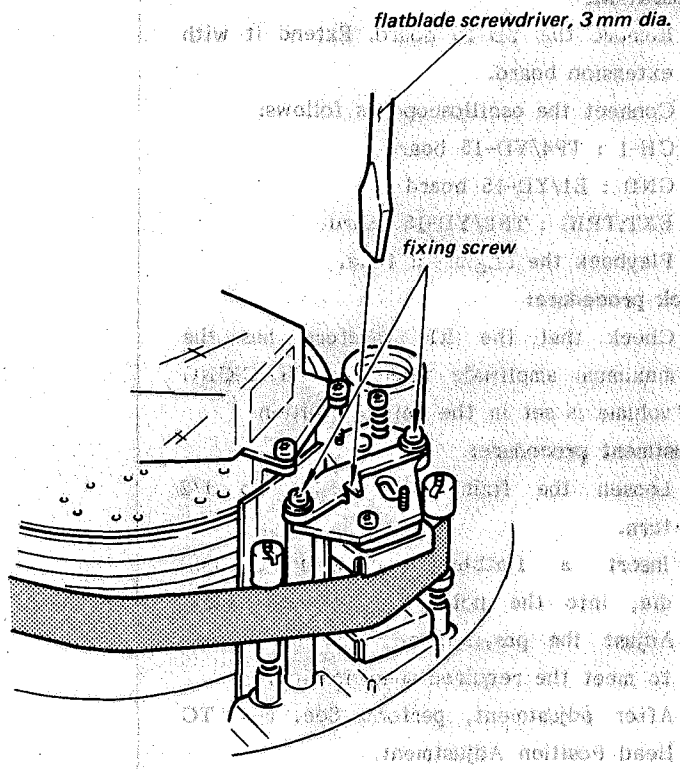

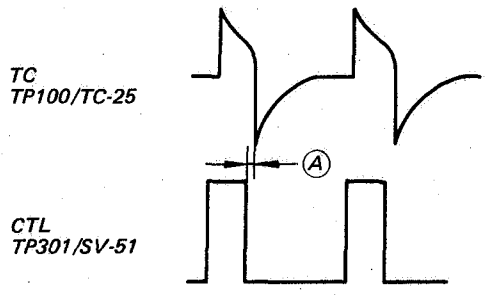

Spec.:
A = 0 ± 400 μsec.

9-7. SWITCHING POSITION ADJUSTMENT

Mode: Playback tha alignment tape

Tool: Alignment tape, CR2-1PS
Oscilloscope

Preparation:

(1) Remove the SV-51 board. Extend it with extension board.

(2) Connect the oscilloscope as follows:
CH-1 : TP4/YD-15 board
CH-2 : TP4/CD-25 board
GND : E1/YD-15 board
EXT.TRIG : TP2/YD-15 board

(3) Playback the alignment tape.

Check procedure:

(1) Turn the TRACKING volume to the FIXED position.

(2) Check that the lack of the CH-A and CH-B RF envelopes meet the required specification at the CH-1 of the oscilloscope.

(3) Check that the lack of the CH-A and CH-B RF envelopes meet the required specification at the CH-2 of the oscilloscope.

Adjustment procedure:

(1) Set the oscilloscope to the CH-1. (Y-RF envelope)

(2) Adjust RV1 and RV3 on SV-51 board to meet the required specification.
(CAUTION)
Perform steps (3) and later when RV1 and RV3 are adjusted.

(3) Set the oscilloscope to CH-2.

(4) Adjust RV6 on SV-51 board to meet the required specification.

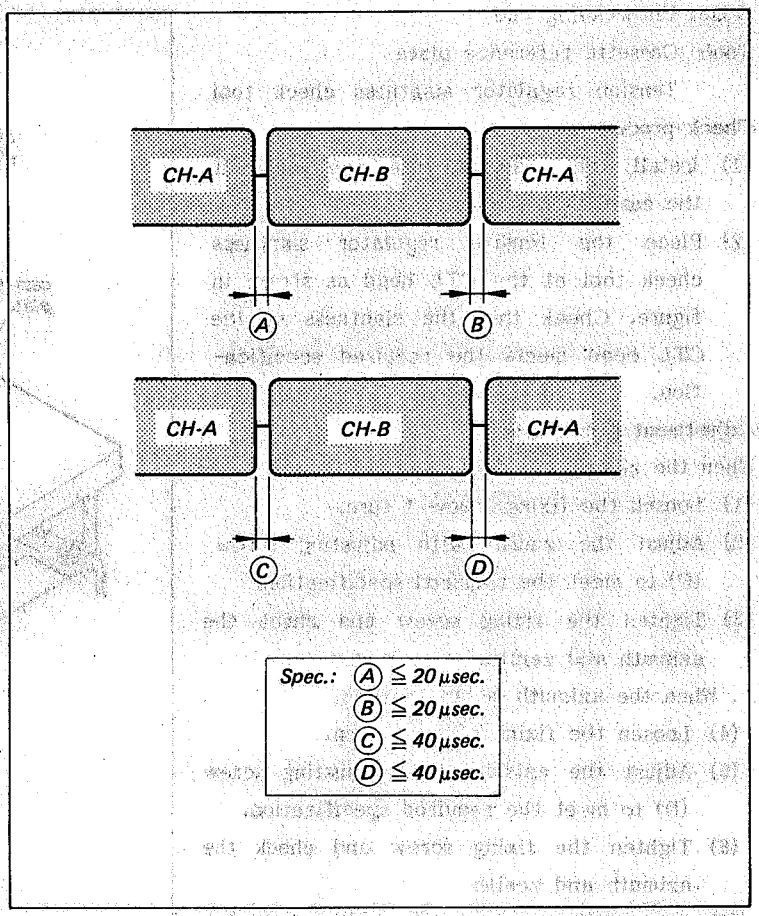

9-8. CTL HEAD AZIMUTH/ZENITH ADJUSTMENT

Mode: Unthreading end

Tool: Cassette reference plate

Tension regulator slantness check tool

Check procedure:

(1) Install the cassette reference plate in the cassette position.

(2) Place the tension regulator slantness check tool at the CTL head as shown in figure. Check that the slantness of the CTL head meets the required specification.

Adjustment procedure:

When the zenith is out of spec.

(1) Loosen the fixing screw 1 turn.

(2) Adjust the zenith with adjusting screw (C) to meet the required specification.

(3) Tighten the fixing screw and check the azimuth and zenith.

. When the azimuth is out of spec.

(4) Loosen the fixing screw 1 turn.

(5) Adjust the azimuth with adjusting screw (D) to meet the required specification.

(6) Tighten the fixing screw and check the azimuth and zenith.

(7) After adjustment, perform the following adjustment.

Sec.9-9. CTL Head Height Adjustment

Sec.9-5. CTL Head Position Adjustment

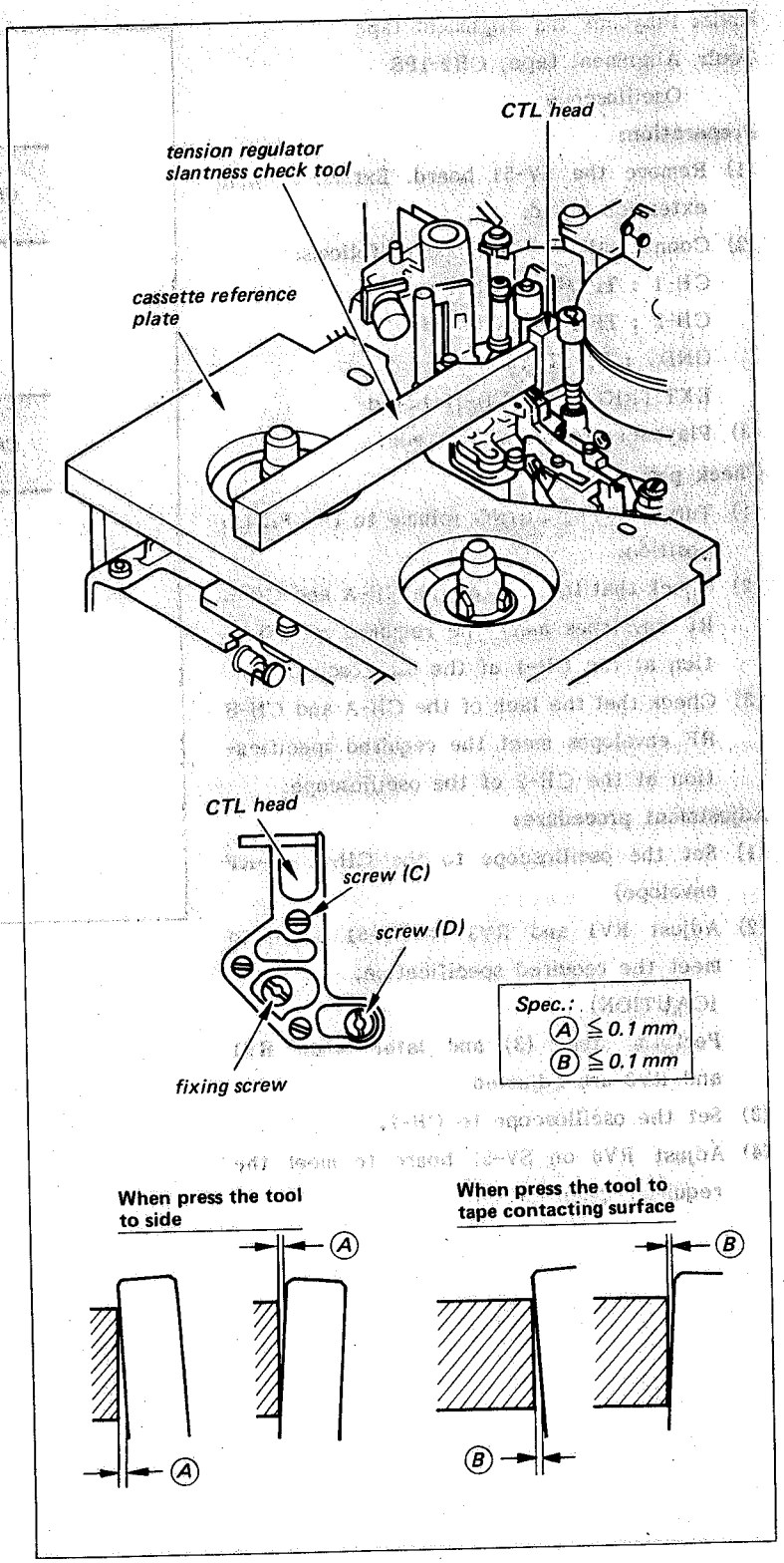

9-9. CTL HEAD HEIGHT ADJUSTMENT

Mode: Playback the alignment tape

Tool: Alignment tape, CR5-1PS
Oscilloscope

Preparation:

(1) Remove the SV-51 board. Extend it with extension board.

(2) Connect the oscilloscope as follows:
CH-1 : TP302/SV-51 board
TRIG : INTERNAL, CH-1

(3) Insert the alignment tape, and playback the audio 0.8kHz signal portion that is recorded on the CTL track of the alignment tape.

Check procedure:

(1) When pressing down and pushing up the tape at (A) portion, check that the both levels decrease. If the levels increase, the following adjustments are required.

Adjustment procedure:

. When the levels increase while pressing down the tape at (A) portion.

(1) Loosen the fixing screw 1 turn.

(2) Turn the adjusting screw (D) in the counterclockwise direction and turn the adjusting screws (C) and (B) an exactly equal amount in the clockwise direction. Adjust for maximum output waveform.

(3) Tighten the fixing screw and check again.

. When the levels increase while pushing up the tape at (A) portion.

(4) Loosen the fixing screw 1 turn.

(5) Turn the adjusting screw (D) in the clockwise direction and turn the adjusting screws (C) and (B) an exactly equal amount in the counterclockwise direction. Adjust the maximum output waveform.

(6) Tighten the fixing screw and check again.

(7) After adjustment, perform the following adjustment.
Sec.9-8. CTL Head Azimuth/Zenith Adjustment
Sec.9-5. CTL Head Position Adjustment

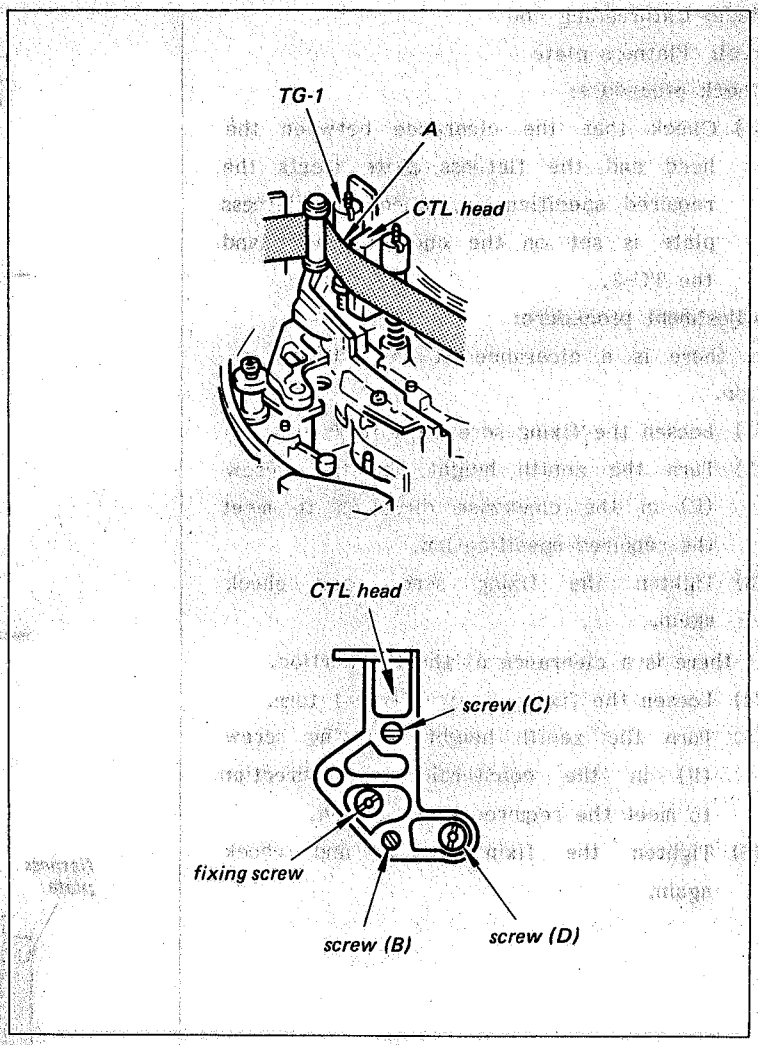

9-10. AUDIO/TC HEAD ZENITH ADJUSTMENT

Mode: Unthreading end

Tool: Flatness plate

Check procedure:

(1) Check that the clearance between the head and the flatness plate meets the required specification, when the flatness plate is set on the audio/TC head and the TG-3.

Adjustment procedure:

If there is a clearance at the bottom portion.

(1) Loosen the fixing screw 1/4 to 1 turn.

(2) Turn the zenith height adjusting screw (R) in the clockwise direction to meet the required specification.

(3) Tighten the fixing screw and check again.

If there is a clearance at the top portion.

(4) Loosen the fixing screw 1/4 to 1 turn.

(5) Turn the zenith height adjusting screw (R) in the counterclockwise direction to meet the required specification.

(6) Tighten the fixing screw and check again.

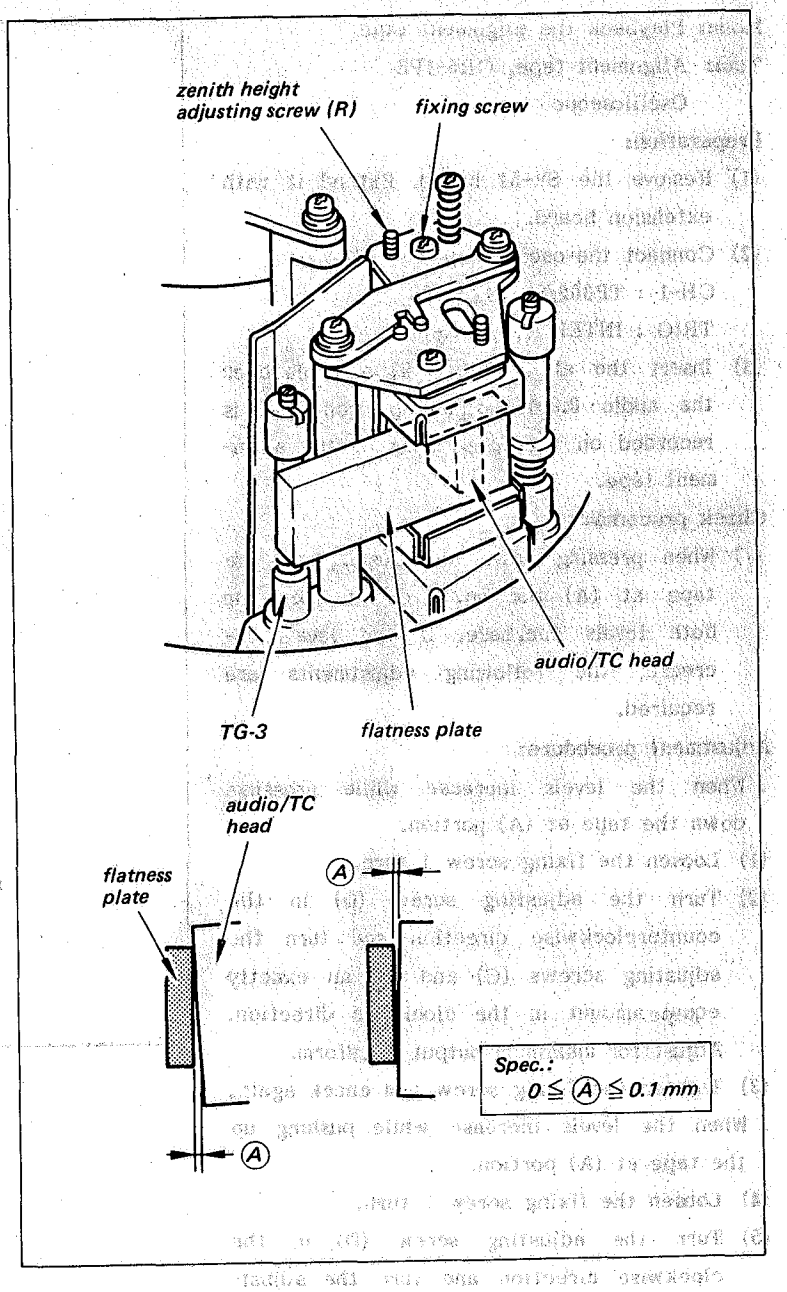

9-11. AUDIO HEAD HEIGHT ADJUSTMENT

Mode: Playback the alignment tape

Tool: Alignment tape, CR5-1PS
Dual trace oscilloscope or VTVM

Preparation:

(1) Connect the oscilloscope or VTVM to the AUDIO OUT CH-1 and CH-2.

(2) Playback the audio 1kHz signal portion of the alignment tape.

Check procedure:

(1) When pressing down the tape at (a) portion, check that the level decreases.

(2) When pushing up the tape at (b) portion, check that the level decreases.

Adjustment procedure:

. When the level increase while pressing down the tape at (a) portion.

(1) Loosen the fixing screw 2 to 3 turns.

(2) Turn the zenith height adjusting screws (R) and (F) in the counterclockwise direction and turn the azimuth adjusting screw an exactly equal amount in the clockwise direction. Adjust for maximum output waveform.

(3) Tighten the fixing screw and check again.

. When the level increases while pushing up the tape at (b) portion.

(4) Turn the zenith height adjusting screws (R) and (F) in the clockwise direction and turn the azimuth adjusting screw an exactly equal amount in the counterclockwise direction. Adjust for maximum output waveform.

(5) Tighten the fixing screw and check again.

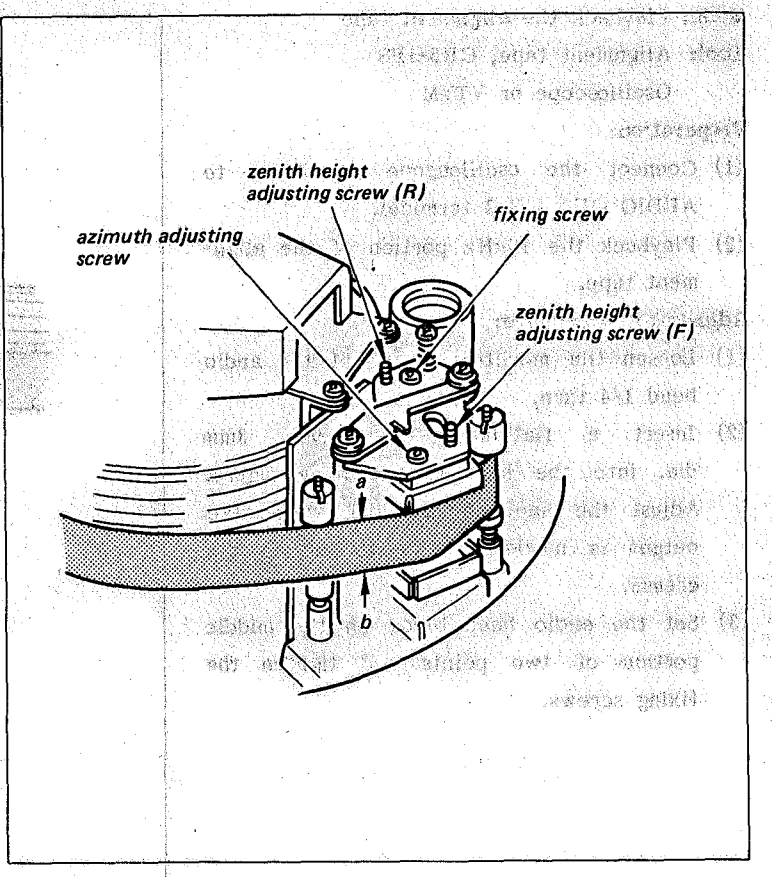

9-12. AUDIO HEAD TAPE-TO-HEAD CONTACT ADJUSTMENT

Mode: Playback the alignment tape

Tool: Alignment tape, CR5-1PS
Oscilloscope or VTVM

Preparation:

(1) Connect the oscilloscope or VTVM to AUDIO OUT CH-2 terminal.

(2) Playback the 10kHz portion of the alignment tape.

Adjustment procedure:

(1) Loosen the mounting screw of the audio head 1/4 turn.

(2) Insert a flatblade screwdrever, 3mm dia. into the hole as shown in figure. Adjust the audio head block where the output is maximum and starting to decrease.

(3) Set the audio head block on the middle portion of two points and tighten the fixing screws.

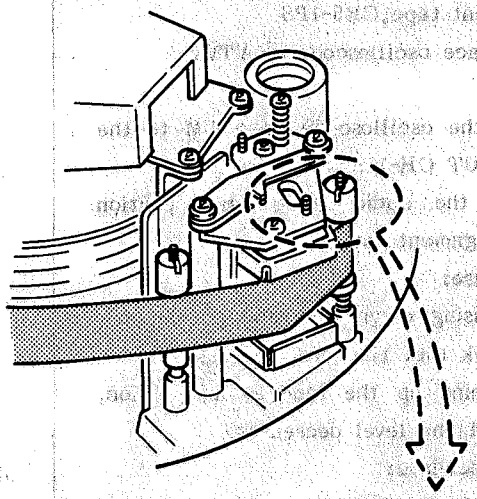

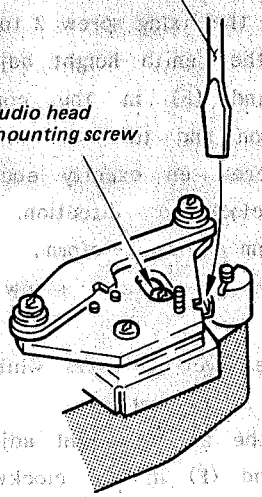

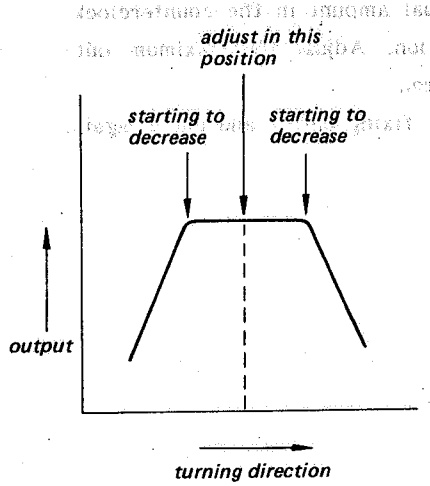

9-13. AUDIO HEAD PHASE ADJUSTMENT

Mode: Playback the alignment tape

Tool: Alignment tape, CR5-1PS
Dual trace oscilloscope

Preparation:

(1) Connect the horizontal and vertical terminals of the oscilloscope to AUDIO OUT CH-1 and CH-2 terminals.

(2) Playback the audio 10kHz portion of the alignment tape.

(3) Adjust the scope for horizontal and vertical amplitudes of 6cm of a lissajous waveshape.

Check procedure:

(1) Check that the vertical amplitude at the center in the horizontal direction is within the specification.

(2) The lissajous waveshape meets the required specification at 1kHz.

Adjustment procedure:

(1) Loosen the fixing screw 1/4 to 1/2 turn.

(2) Turn the azimuth adjusting screw to meet the required specification.

(3) Tighten the fixing screw and check again.

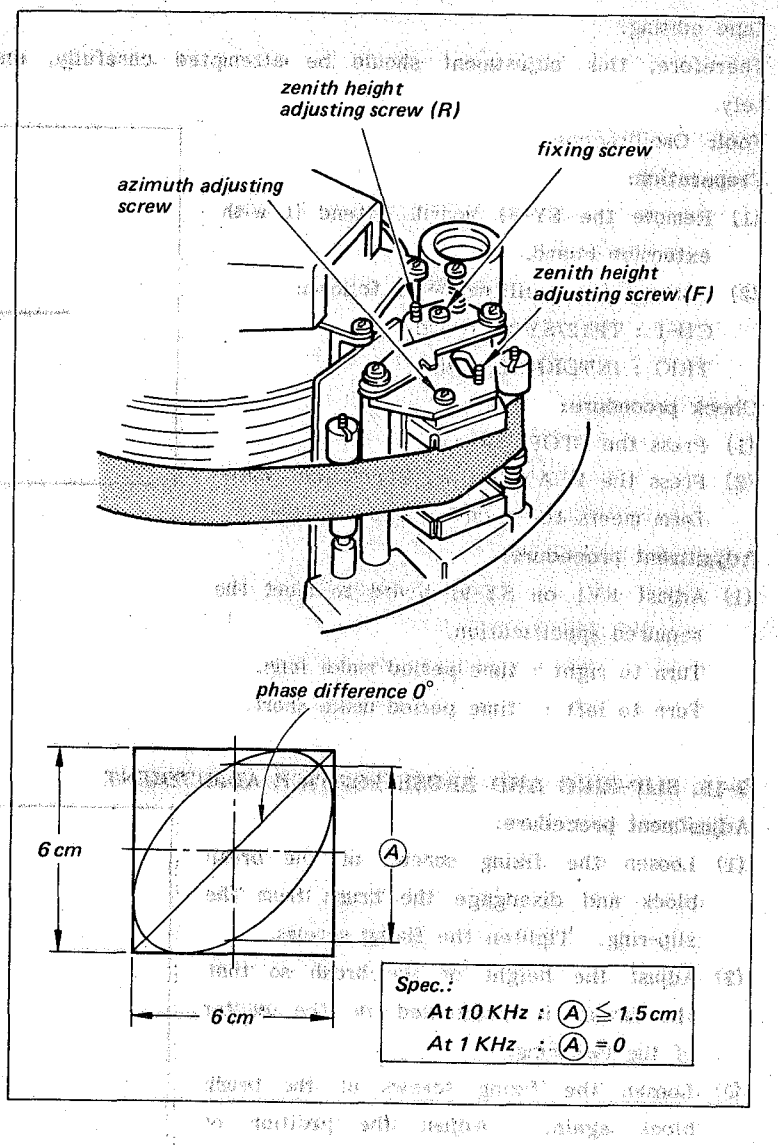

9-14. PINCH ROLLER PRESSURE TIMING ADJUSTMENT

This adjustment is closely related with the accuracy of the tape-to-tape editing.

Therefore, this adjustment should be attempted carefully, and deliberately.

Tool: Oscilloscope

Preparation:

(1) Remove the SY-91 board. Extend it with extension board.

(2) Connect the oscilloscope as follows:

CH-1 : TP12/SY-91 board

TRIG : INTERNAL, CH-1

Check procedure:

(1) Press the STOP button.

(2) Press the PLAY button. Check that waveform meets the required specification.

Adjustment procedure:

(1) Adjust RV1 on SY-91 board to meet the required specification.

Turn to right : time period make long.

Turn to left : time period make short.

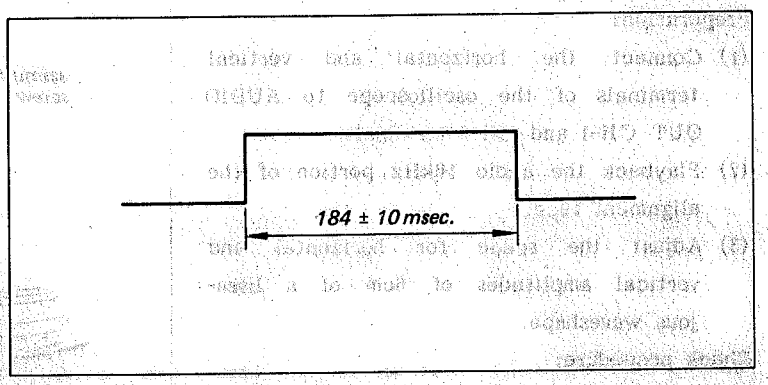

9-15. SLIP-RING AND BRUSH POSITION ADJUSTMENT

Adjustment procedure:

(1) Loosen the fixing screws of the brush block and disengage the brush from the slip-ring. Tighten the fixing screws.

(2) Adjust the height of the brush so that the brush is positioned in the center of the two rings.
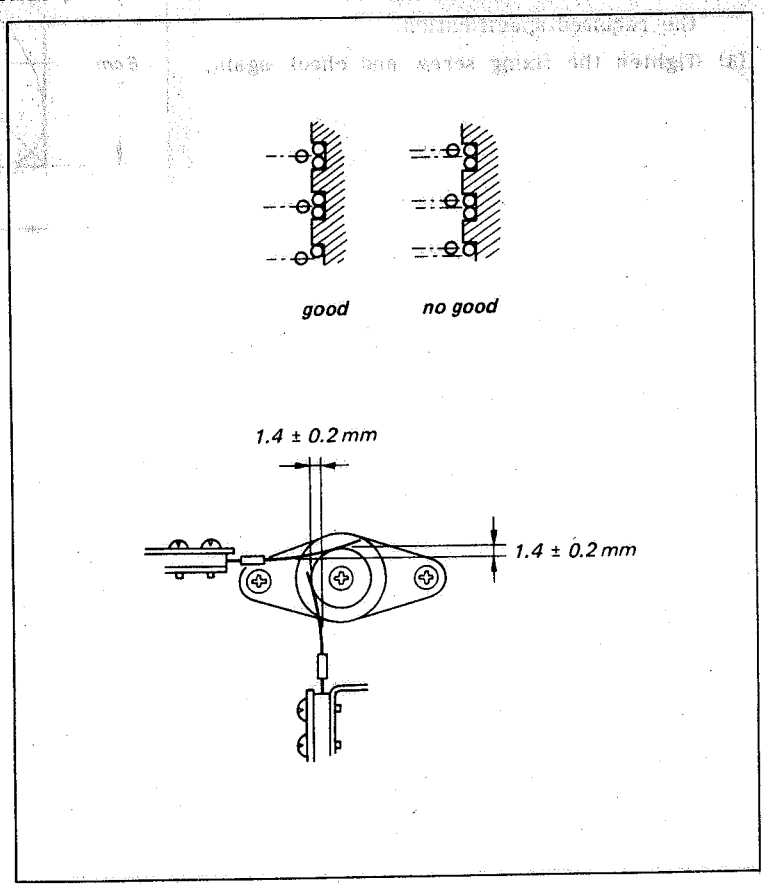
(3) Loosen the fixing screws of the brush block again. Adjust the position of the brush to meet the specification.